How to get the best from Your Induction Cooktop

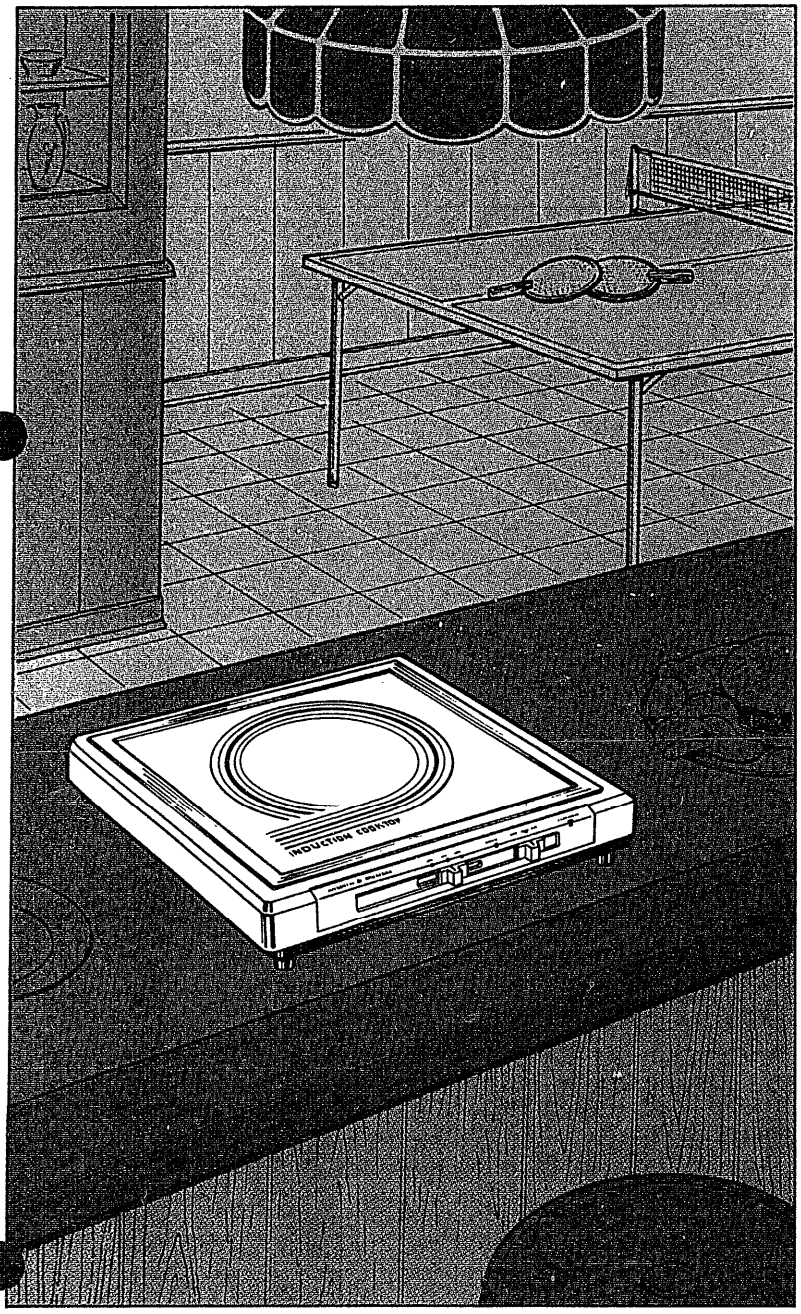

Use and Care of model JIC100

Features

Cookware to use

Cooking guide

Questions? Use the Problem Solver

JIC100
JIC100H

Your Direct Line to General Electric

The GE Answer Center™ 800.626.2000

EFF DATE 02-18-86

GENERAL ELECTRIC

PUB 49-4710

Contents

Energy-Saving Tips 2
Safety Instructions 3, 4
Features 5
Cooking 6
Cookware to Use 6, 7
Induction Cooking Chart 8, 9
Care and Cleaning 10
The Problem Solver 11
If You Need Service 11
Warranty 12

Help us help you...

Read this book carefully.

It is intended to help you operate and maintain your new cooking unit properly.

Keep it handy for answers to your questions.

If you don't understand something or need more help, write (include your phone number):

Consumer Affairs
General Electric Company
Appliance Park
Louisville, KY 40225

Write down the model and serial numbers.

You'll find them on a label on the bottom of the cooking unit.

These model and serial numbers are also on the Consumer Product Ownership Registration Card that came with your cooking unit. Before sending in this card, please write these numbers here:

_____
Model Number

_____
Serial Number

Use these numbers in any correspondence or service calls concerning your cooking unit.

If you received a damaged cooking unit...

Immediately contact the dealer (or builder) that sold you the cooking unit.

Save time and money. Before you request service...

Check the Problem Solver on page 11. It lists minor causes of operating problems that you can correct yourself.

It could save you an unnecessary service call.

Energy-Saving Tips

- Use magnetic cookware of steel or cast iron with tight-fitting covers and flat bottoms.
- Cook fresh vegetables with a minimum amount of water in a covered pan.
- Watch foods when bringing them quickly to cooking temperature at HI heat. When food reaches cooking temperature, reduce heat immediately to lowest setting that will keep it cooking.
- Use correct heat for cooking task. See cooking charts on pages 8 and 9.
- When boiling water for tea or coffee, heat only the amount needed. It is not economical to boil a container full of water for only one or two cups.

IMPORTANT SAFETY INSTRUCTIONS

Read all instructions before using this appliance.

When using electrical appliances, basic safety precautions should be followed, including the following:

- **Use this cooking unit only for its intended use** as described in this Use and Care book.
- **Be sure the cooking unit is plugged into a properly installed and grounded 120-volt, 15-amp electrical outlet** before you operate it.
- **A short power cord** is provided to help avoid the hazards resulting from tangling in or tripping over a longer-than-necessary cord. If a longer cord is needed, an extension cord, available from your hardware store, may be used if you use it carefully. If an extension cord is used, (1) the marked electrical rating of the extension cord must be at least as great as the electrical rating of the appliance, and (2) the extension cord must be arranged so it will not drape over the countertop or tabletop where children can pull it or people can trip over it.
- **Do not operate this cooking unit outdoors.**
- **This cooking unit uses electromagnetic energy which can interfere with the operation of some pacemakers.** Before using the cooking unit, make sure any pacemaker near it has adequate interference protection.
- **Do not bring items that are sensitive to magnetism close to the cooking unit,** even when the power is off. Items such as watches, credit cards, tickets and magnetic tapes may be damaged by the permanent magnet used inside.
- **Keep the cooking unit away from a radio and from a TV set with remote control.** The cooking unit may produce interference in a radio or interfere with the operation of a wireless remote control.

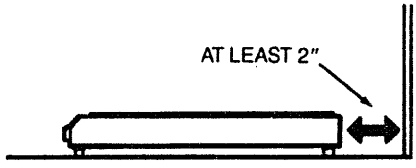

- **Keep the air intake and exhaust holes in the back of the cooking unit at least 2 inches away from a wall.** Also, when using the cooking unit on a table, be sure a tablecloth or napkin does not block the holes. Inadequate air circulation will cause the inside temperature to rise, activating the "overheat protection circuit" and stopping heating.
- **Do not let the power cord hang over the edge of a table or countertop or touch hot surfaces.**
- **Do not place the cooking unit on or near a hot gas or electric surface unit or in a heated oven.**
- **Repair or replace the power cord immediately** if it becomes frayed or otherwise damaged.
- **Do not operate the cooking unit if the glass is broken.** Take the cooking unit in for service immediately if this happens.
- **Do not place or store items on top of the cooking unit** when it is not in use.
- **As the cooking pan gets hot, it transmits heat to the cooking surface.** Do not place plastic materials on the surface—they may melt or warp. And don't touch the surface until it has cooled.
- **Avoid heating an empty pan.** Doing so can damage the cooking unit and the pan.
- **Do not insert foreign objects or metallic objects into openings in the cooking unit.** Doing so can result in electric shock and/or damage to the cooking unit.
- **Keep bottom of pan and surface of cooking unit clean and dry.** Wipe cooking unit before and after use to avoid scratches from dust and grit.
- **Avoid scratching the cooking unit** with sharp implements, or with rings and other jewelry.
- **Never use the cooking unit as a cutting board.**
- **Do not store flammable materials near the cooking unit.**
- **Do not let cooking grease or other flammable materials accumulate on or near the cooking unit.**
- **Don't leave children alone or unattended where the cooking unit is in operation.** They could be seriously burned.
- **Don't allow anyone to climb, stand or hang on the cooking unit.**
- **CAUTION: ITEMS OF INTEREST TO CHILDREN SHOULD NOT BE STORED IN CABINETS ABOVE THE COOKING UNIT—CHILDREN CLIMBING ON THE COOKING UNIT TO REACH THEM COULD BE SERIOUSLY INJURED.**
- **Do not allow water, other liquids or grease to remain on cooking unit or control panel.**
- **Do not place any spoons or other stirring utensils on cooking unit when it is in use.** They may become hot and could cause burns.

(continued next page)

IMPORTANT SAFETY INSTRUCTIONS (continued)

Cooking

- **Don't assume that you know how to operate all parts of the cooking unit.** Induction cooking works differently from your previous cooking unit.
- **Use proper cookware type and size.** See pages 5 through 7.
- **Never wear loose fitting or hanging garments while using the appliance.** Flammable material could be ignited if brought in contact with hot surfaces and may cause severe burns.
- **Use only dry potholders—** moist or damp potholders on hot surfaces may result in burns from steam. Do not use a towel or other bulky cloth in place of a potholder.
- **Always turn power switch to OFF before removing utensil.**
- **Carefully watch foods being fried at HI setting.**
- **Foods for frying should be as dry as possible.** Frost on frozen foods or moisture on fresh foods can cause hot fat to bubble up and over sides of pan.
- **Use least possible amount of fat for effective shallow or deep-fat frying.** Filling the pan too full of fat can cause spillovers when food is added.
- **If a combination of oils or fats will be used in frying,** stir together before heating, or as fats melt slowly.
- **Always heat fat slowly,** and watch as it heats.
- **Use deep fat thermometer whenever possible** to prevent overheating fat beyond the smoking point.
- **Do not use water on grease fires.** Never pick up a flaming pan. Turn off power, then smother flaming pan by covering pan completely with well fitting lid, cookie sheet or flat tray. Flaming grease outside a pan can be put out by covering with baking soda or, if available, a multi-purpose dry chemical or foam.
- **When flaming foods under the hood, turn the fan off. The fan, if operating, may spread the flame.**
- **Don't heat unopened food containers on your cooking unit. Pressure could build up and the container could burst causing an injury.**
- **Do not use aluminum foil or aluminum cookware on cooking unit.** Use only cookware as described on the following pages of this book.
- **When cooking pork,** follow our directions exactly and always cook the meat to at least 170° F. This assures that, in the remote possibility that trichina may be present in the meat, it will be killed and the meat will be safe to eat.
- **Never leave cooking unit unattended at HI heat setting.** Boilover causes smoking and grease spillovers. Boil dry situations can cause permanent damage to utensil or glass surface area.

Cleaning

- **Clean only parts listed in this Use and Care Book.**
- **Keep cooking unit clean and free of accumulations of grease or spillovers which may ignite.**
- **Before cleaning, unplug the power cord from the electrical outlet.**
- **Clean cooking unit with caution.** If a wet sponge or cloth is used to wipe spills on a hot cooking area, be careful to avoid steam burn. Some cleansers can produce noxious fumes if applied to a hot surface.
- **Do not scratch, or use any abrasives** on cooking unit or control panel.
- **Do not immerse cooking unit or cord set in water.**

If You Need Service

- **Read "The Problem Solver" on page 11 of this book.**
- **Don't attempt to repair or replace any part of your cooking unit unless it is specifically recommended in this book.** All other servicing should be referred to a qualified technician.
- **Unplug the power cord** from the electrical outlet before performing any service.
- **Allow the unit to cool** before removing or replacing any parts.

SAVE THESE INSTRUCTIONS

The Induction Cooking Unit

How it works

When you slide the power switch to ON and center a cast iron or steel pan on the cooking area, a magnetic sensor detects the pan and allows the induction coil to be activated.

This high-frequency coil, located just below the cooking surface, generates a magnetic field that induces a current in the metal pan. This current encounters resistance in the pan and generates heat.

The pan begins to heat. Immediately.

Then the pan heats the contents. Almost immediately, heat is transmitted to the food.

The cooking unit itself does not heat. The only heat in the cooking unit is that which is transferred from the cooking pan, and no heat is generated at all unless a pan is placed on the cooking area.

Power response is virtually instantaneous, for precise cooking control. No time is lost waiting for the cooking unit to heat.

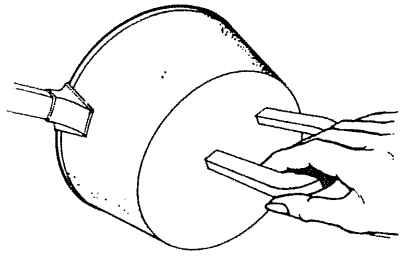

Remember—magnetic induction cooking requires the use of cookware made of ferrous metals. Metals to which magnets will stick. Iron or steel.

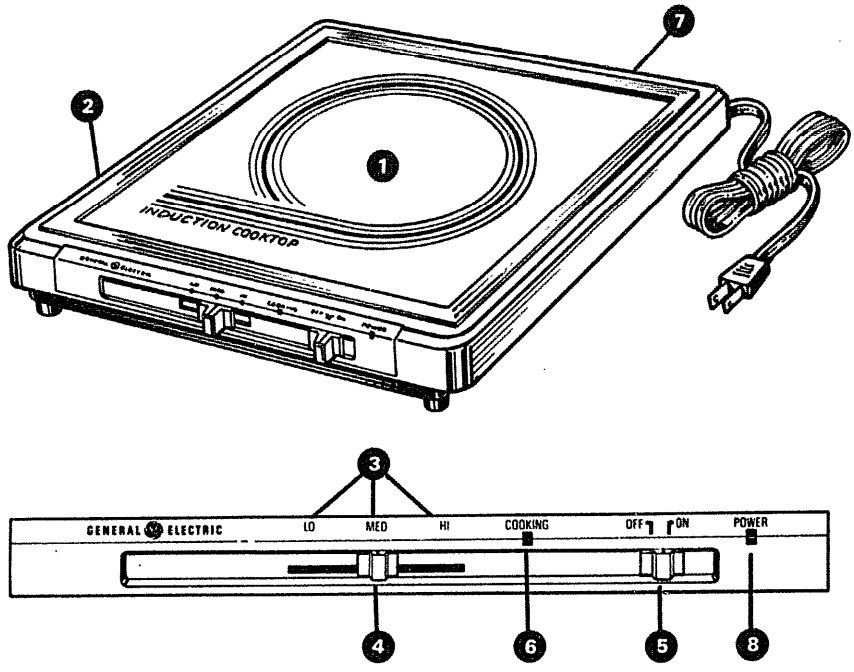

1. **Heating area**—center the pot in the circle.
2. **Air intake openings**—located at the bottom left.
3. **Power level indicators.**
4. **Power level control**—used to control the output (power) from LO to HI.
5. **Power switch.**
6. **Cooking indicator light**—glows when unit is in operation.
7. **Exhaust openings**—located at the bottom right.
8. **Power indicator light**—glows when power switch is turned ON.

Controls and lights

The power switch lets you turn the cooking unit ON or OFF.

The POWER indicator light glows when the power switch is at ON, goes out when the switch is at OFF.

The power level control lets you select from three indicated power levels—LO, MED or HI heat—or an infinite variety of unmarked heat selections in between.

The COOKING light glows when the power switch is at ON and a proper pan is correctly placed on the cooking unit. The light goes out when the power goes off or the pan is removed.

Normal sounds

You'll hear a slight fan noise when the cooking unit is operating. An automatic fan circulates air under the cooking unit to keep the induction coil cool during cooking. Fan goes off automatically when cooking unit is turned off.

Some AM radio interference may be noticed if cooking unit is in use near the radio. This interference, similar to that caused by other small appliances such as mixers and vacuum cleaners, is normal and does not indicate a problem with the cooking unit.

Cookware to Use

Some of your pots and pans will probably give good results on the induction cooking unit. Which ones? Find out this way:

Slide the power switch to ON and center a pan on the circular heating pattern. If the pan is suitable, you'll hear a slight "clicking" sound when the pan is placed on the cooking unit. Also, if the pan is dry, it will heat in seconds. And if it contains a little water, it will begin to steam very quickly.

When you shop for suitable new cookware, take a magnet along and test before you buy.

Look for cookware made from magnetic stainless steel, cast iron, enameled steel and combinations of these materials.

Do not use aluminum, or aluminum clad cookware, copper or copper clad utensils, aluminum foil, glass/ceramic cookware and some stainless steel that does not attract magnets.

Round pans give best results. Square or rectangular pans do not heat uniformly.

Do not use a pan less than 4" across the bottom. The cooking unit is designed so it will not accidentally start if very small steel or iron utensils (less than 4" across the bottom) are placed on the cooking surface when the unit is on—items such as steel spatulas, cooking spoons, knives and other small utensils.

The bottom of the pan need not be perfectly flat. Although pans with rims or ridges are acceptable, flat-bottom pans give best results.

We do not recommend frying pans over 10" for foods that are not stirred or redistributed in the skillet while frying—foods such as fried eggs, French toast or pancakes. The outer edges of an oversize skillet develop less heat than areas within the 10" center and foods in the outer area may be undercooked.

However, foods that are stirred like scrambled eggs, or moved about like chicken, can be cooked successfully in skillets up to 10" (9" across the bottom) because the heat is distributed within the food when you stir or redistribute it while it is cooking.

Always use containers designed for surface cooking.

When speed is desirable, such as when boiling water, use lighter weight cookware. Lightweight pans heat and cool rapidly, but may not heat as evenly as you like. Do not use extremely thin pans—they may warp.

For frying bacon, pancakes or other foods where small amounts of fat are used in the pan, use heavier pans that distribute heat more uniformly. Cooking results will be more even, and there's less chance of scorching. We find heavyweight (3-ply) stainless steel gives best cooking results.

For most types of boiling, simmering and sauce making, lightweight stainless steel cookware works well providing the proper heat setting is used.

Enamel-coated steel or cast iron cookware may also be used.

Some steel pans have a layer of aluminum embedded in the bottom. Test them carefully with a magnet before you buy. Some can be used in induction cooking. Others cannot.

The next page contains a list of cookware we found suitable for the induction cooking unit based on actual heating and cooking tests. The chart lists a variety of types and sizes of cookware made by manufacturers of the brands tested. Not all sizes are available in each cookware line on our list. And not listed are more types of stainless and carbon steel cookware that are now becoming available.

Cooking

How to Use Your Cooking Unit to Prepare Long Grain Rice

1 cup rice

2 cups water

1 tsp. salt

1 T. butter or margarine (optional)

In 6-inch steel saucepan, combine rice, water and salt. Add butter or margarine if desired. Place pan on center of circled cooking area.

Step 1: Slide power switch to ON.

Step 2: Slide power level control to HI.

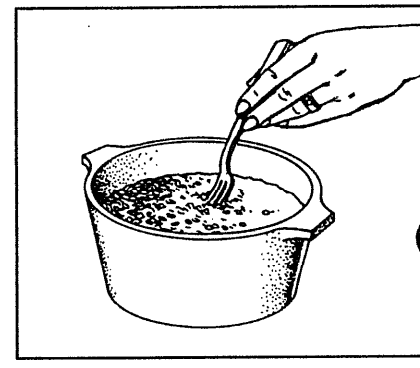

Step 3: Bring rice to boil on HI setting (approximately 3 minutes). Stir with fork.

Step 4: Slide power level control to LO.

Step 5: Cover tightly with lid and cook approximately 20 minutes, until water is absorbed and rice is tender.

Step 6: Slide power switch to OFF. Power to the cooking unit will shut off and the cooking indicator light and power indicator light will go out.

NOTE: If the pan is moved off the center of the circled area of the cooking unit during cooking, heating will stop and cooking light will go out. Lift the pan at least 1," place it in the center of the circled cooking area and cooking will resume.

Cookware Information

Brand	Cookware Lines Tested on Induction Cooking Unit	Material	Examples of Cookware Sizes and Types of Cookware in this Brand
Revere Ware	Stainless Steel Collection (does not have copper bottom).	Stainless Steel with Carbon Core	**Saucepans:** 1½-qt. to 4-qt. **Skillets and Omelet Pans:** 8-inch and 10-inch. (12-inch skillet is available but is not recommended.) **Stock Pots:** 5-qt. to 10-qt. **Other:** 1½ and 2-qt. double boiler insert, 1½-qt. steamer.
Regal Ware	Duncan Hines Regal Steel	Stainless Steel with Carbon Core	**Saucepans:** 1-qt. to 3-qt. **Skillets:** 7-inch to 10½-inch. **Dutch Ovens:** 5-qt. and 8-qt. **Other:** 2-qt. double boiler, 12-qt. stock pot, 3-qt. combination cooker.
General Housewares	Fanci Pans, Chocolate Almond, Boutique, General Store, Classic Coordinates, Heavy Weights, Columbian	Porcelain-on-Steel	**Saucepans:** 1-qt. to 2-qt. (½-qt. saucepan is available but is not recommended.) **Skillets and Saucepans:** 7-inch and 10-inch. **Stock Pots:** 4-qt. to 12-qt. **Other:** 1½-qt. double boiler, 1-qt. 29 oz. and 2-qt. teakettle, 5-qt. casserole, 4-qt. vegetable cooker, 5-qt. Dutch oven, 1½-qt. pitcher pot/beverage server.
General Housewares	Wagner Ware	Cast Iron	**Skillets, Square Skillets and Skillet Griddles:** 6½-inch to 10½-inch. (Some skillet items above are available in sizes larger than 10½-inch, but are not recommended.) **Dutch Ovens:** 5-qt. and 9-qt. **Other:** 9½-inch Swedish plett pan.
West Bend	Town House	Stainless Steel	**Saucepans:** 1-qt. to 3-qt. **Skillets:** 10-inch. **Other:** 2½-qt. "high boy" (saucepan with high sides).
Pointerware	Danya, Cuisine, LaChef	Porcelain-on-Steel	**Saucepans:** 1-qt. to 3-qt. **Skillets:** 9-inch and 10-inch. (11-inch skillet is available but is not recommended.) **Dutch Ovens:** 4-qt. and 5-qt. **Stock Pot:** 8-qt. **Other:** 2½-qt. double boiler, teakettle, coffee percolator.
Sanko	Kikyo, High Tech, Show Pans, Country Flowers	Porcelain-on-Steel	**Saucepans:** 1½-qt. to 3-qt. **Skillets:** 8-inch to 10-inch. **Dutch Ovens:** 3-qt. to 8-qt. **Other:** 1-qt. warmer/server, 2½-qt. casserole, 2-qt. and 2½-qt. teakettles, 3½-qt. buffet server, 7-qt. steamer, covered deep fryer.
Asta	Old Amsterdam, Nancy DeLuxe, Negritta, Toffee Brown, Bioletta, Kirsch Red	Porcelain-on-Steel	**Saucepans:** 1-qt. to 2-qt. **Skillets:** 10-inch. **Stock Pots:** 2½-qt. to 7-qt. **Casseroles:** 1½-qt. to 5-qt. **Other:** 2½-qt. teakettle.
Copco		Porcelain-on-Cast Iron	**Saucepans:** 1-qt. to 3-qt. **Skillets and Omelet Pans:** 8½-inch and 10-inch. (12-inch skillet is available but is not recommended.) **Casseroles:** 1½-qt. to 7-qt. **Other:** 2-qt. to 3-qt. teakettles.
Vollarath Co.	Queen's Choice	Stainless Steel	**Saucepans:** 1-qt. to 3-qt. **Skillets:** 1-qt. to 3-qt. **Sauce Pots:** 4-qt. to 12-qt.
Taylor & NG		Carbon Steel	**Flat Bottom Wok:** Diameter at bottom is about 4 inches.
LeCruset		Porcelain-on-Cast Iron	**Saucepans:** 1½-qt. to 2-qt. **Skillets:** 6-inch to 10-inch. (Over 10" not recommended.) **Dutch Ovens:** 2-qt. to 9-qt.

Induction Cooking Chart

1. Use medium or heavyweight stainless steel or cast iron cookware. Use magnet test to see if cookware material is acceptable. (See page 6.) Do not use any material such as glass, plastic or aluminum. The settings in the chart are based on medium weight stainless steel. If cast iron is used, it may be necessary to adjust to the HI power setting. Thinner enameled stainless steel might need lower power levels.

2. Round pans cook more evenly. Although pans don't have to be perfectly flat, pans that are badly warped may not heat evenly.

3. All pans should be at least 4" across the bottom. The size of the pan and amount of food being cooked could change the power settings as suggested by the following chart.

Food	Container	Directions and Setting to Start Cooking	Setting to Complete Cooking	Comments
Cereal Cornmeal, grits, oatmeal	Covered Saucepan	HI. In covered pan, bring water to boil before adding cereal.	LO, then add cereal. Finish timing according to package directions.	Cereals bubble and expand as they cook; use large enough saucepan to prevent boilover.
Cocoa	Uncovered Saucepan	HI. Stir together water or milk, cocoa ingredients. Bring just to a boil stirring constantly.	MED, to cook 1 minute to completely blend ingredients.	Milk boils over rapidly. Watch as boiling point approaches. Do not leave pan unattended
Eggs Cooked in shell	Covered Saucepan	HI. Cover eggs with cool water. Cover pan, cook until steaming.	LO. Cook only 3 to 4 minutes for soft cooked; 15 minutes for hard cooked.	
Fried sunny-side-up	Covered Skillet	MED. Melt butter, add eggs and cover skillet.	Continue cooking at setting between MED and LO until whites are just set, about 2 to 3 more minutes.	If you do not cover skillet, baste eggs with fat to cook tops evenly.
Fried over easy	Uncovered Skillet	MED. Melt butter.	Halfway between MED and LO, then add eggs. When bottoms of eggs have just set, carefully turn over to cook other side.	
Poached	Covered Skillet	HI. In covered pan, bring water to a boil.	LO. Carefully add eggs. Cook uncovered about 5 minutes at MED.	Remove cooked eggs with slotted spoon or pancake turner.
Scrambled or omelets	Uncovered Skillet	MED. Heat butter until light golden in color.	Halfway between MED and LO. Add egg mixture. Cook, stirring to desired doneness.	Eggs continue to set slightly after cooking. For omelet, do not stir last few minutes. When set, fold in half.
Fruits	Covered Saucepan	HI. In covered pan, bring fruit and water to boil.	LO. Stir occasionally and check for sticking.	Fresh fruit. Use 1/4 to 1/2 cup water per pound of fruit. Dried fruit: Use water as package directs. Time depends on whether fruit has been presoaked. If not, allow more cooking time.
Meats, Poultry Braised: Pot roasts of beef, lamb or veal (3 lb. limit); pork steaks and chops	Covered Skillet or Covered Dutch Oven	HI. Melt fat, then add meat. Switch to between MED and HI to brown meat. Add water or other liquid.	LO. Simmer until fork tender.	Meat can be seasoned and floured before it is browned, if desired. Liquid variations for flavor could be wine, fruit or tomato juice or meat broth. Check during cooking to be sure sufficient liquid is present. Timing: Steaks 1/2 to 1-inch, 3/4 to 1 hour. Beef Stew: 2 to 3 hours. Pot roast: 2½ to 4 hours.
Pan-fried: Tender chops; thin steaks up to 3/4-inch; minute steaks; hamburgers; franks; and sausage; thin fish fillets	Uncovered Skillet	HI. Preheat skillet, then grease lightly.	Halfway between MED and LO. Brown and cook to desired doneness, turning over as needed.	Pan frying is best for thin steaks and chops. If rare is desired, preheat skillet before adding meat. Minute steaks or hamburger do not need additional oil.

4. Frying. Do not overfill container with fat that may spill over when adding food. Frosty foods bubble vigorously. Watch foods frying at high temperatures and keep cooking unit clean from accumulated grease.

Food	Container	Directions and Setting to Start Cooking	Setting to Complete Cooking	Comments
Fried Chicken	Covered Skillet	HI. Melt fat. Switch to between MED and HI to brown chicken.	Halfway between MED and LO. Cover skillet and cook until tender. Uncover last few minutes.	For crisp, dry chicken, cover only after switching to MED for 10 minutes. Uncover and cook; turning occasionally 10 to 20 minutes.
Pan broiled bacon	Uncovered Skillet	HI. In cold skillet, arrange bacon slices. Cook just until starting to sizzle.	Just below MED. Cook, turning over as needed.	Bacon should be turned frequently for even cooking.
Sauteed: Less tender, thin steaks (chuck, round, etc.); liver; thick or whole fish	Covered Skillet	HI. Melt fat. Switch to MED to brown slowly.	MED. Cover and cook until tender.	Meat may be breaded or marinated in sauce before frying.
Simmered or stewed meat; chicken; corned beef; smoked pork; stewing beef; tongue; etc.	Covered Dutch Oven, Kettle or Large Saucepan	HI. Cover meat with water and cover pan or kettle. Cook until steaming.	LO. Cook until fork tender. (Water should slowly boil.) For very large loads, a setting between MED and LO may be needed.	Add salt or other seasoning before cooking if meat has not been smoked or otherwise cured.
Melting chocolate, butter, marshmallows	Small Covered Saucepan.	LO. Allow 3 to 6 minutes to melt through. Stir to smooth.		When melting marshmallows, add milk or water.
Pancakes or French toast	Skillet or Griddle	Between MED and LO. Heat skillet 2 minutes. Grease lightly.	Between MED and LO. Cook 1½ to 2 minutes per side.	Thick batter takes slightly longer time. Turn over pancakes when bubbles rise to surface.
Pasta Noodles or spaghetti	Covered Large Kettle or Pot	HI. In covered kettle, bring salted water to a boil, uncover and add pasta slowly so boiling does not stop.	HI. Cook uncovered until tender.	Use large enough kettle to prevent boilover. Pasta doubles in size when cooked.
Puddings, Sauces, Candies, Frostings	Uncovered Saucepan	MED. Bring just to boil.	LO. To finish cooking.	Stir constantly to prevent sticking.
Vegetables Fresh	Covered Saucepan	HI. Measure 1/2 to 1 inch water in saucepan. Add salt and prepare vegetable. In covered saucepan, bring to boil.	LO. Cook 1-lb. 15 minutes more depending on tenderness of vegetable.	Uncovered pan requires more water and longer time.
Frozen	Covered Saucepan	HI. Measure water and salt as above. Add frozen block of vegetable. In covered saucepan, bring to boil.	MED. Cook according to time on package.	Break up or stir as needed while cooking.
Sauteed: Onions; green peppers; mushrooms; celery; etc.	Uncovered Skillet	HI. In skillet, melt fat. If using butter, use LO.	MED. Add vegetable. Cook until desired tenderness is reached.	Turn over or stir vegetable as necessary for even browning.
Rice and Grits	Covered Saucepan	HI. Bring salted water to a boil.	LO. Cover and cook according to time.	Triples in volume after cooking. Time at LO. Rice: 1 cup rice and 2 cups warm water—25 minutes. Grits: 1 cup grits and 4 cups water—40 minutes.

Questions & Answers

Q. May I change power settings more than once during cooking?

A. Yes, as many times as you wish.

Q. Must I add water to my foods before cooking them?

A. Yes, in some instances such as defrosting frozen vegetables, more water may be needed. Since induction heats the bottom of the pan first and then the sides, the water might tend to evaporate slightly faster.

Q. Is it necessary to have a pan on the unit before setting the controls?

A. No. However, cooking will not begin until proper cookware is correctly placed on the unit.

Q. Should I use a cover when bringing foods to a boil?

A. Yes, lids help reduce heat loss and shorten cooking time.

Q. Will my food continue to cook after the unit is turned off?

A. When the unit is turned off, cooking ceases quickly because there is no surface unit or burner to retain heat.

Q. Does the shape of the pan affect cooking results?

A. Yes. Only round pans are recommended since square or rectangular pans do not heat uniformly. This unit generates heat on the surface of the pan, and round pans match best with the round coil of the unit, thus heating all the area.

Q. Will I hear any sound during cooking?

A. You may hear a slight fan noise after the unit is turned on—the sound of air flowing through the cooking unit. Also, you may hear a slight "click" when placing the pan on the circle of the cooking unit after you slide the power switch to ON. This is a normal magnetic sound.

Q. What if the cooking surface is accidentally turned off during cooking?

A. You must reset. Slide power switch to ON and the cooking unit resumes cooking.

Care of Your Induction Cooking Unit

The smooth glass surface of your induction cooking unit requires very little care to keep it glossy and new looking.



Before using the cooking unit for the first time, clean it thoroughly to remove any dirt or dust from the packing material. Use a smooth-cooking unit cleaner/conditioner and follow package directions.

The cooking unit cooking area does not get hot enough to cause spills and boilovers to stick or bake on. Any spills and spatters wipe off with damp cloth or sponge. Heavier soil may be removed with warm, soapy water, the cooking unit cleaner/conditioner, or baking soda. Non-impregnated plastic pads may be used gently for really stubborn spots.

Avoid use of abrasive materials such as metal pads, cleansing powders and impregnated pads which may scratch the surface. Do not use harsh chemicals such as bleach or chemical oven cleaners.

Clean the cooking unit regularly to avoid discoloration and stains from soil buildup. Wiping before each use will remove tiny, coarse particles of dust, sugar or salt that may cause scratches if caught between cooking unit and pan. Regular use of a good cooking unit cleaner/conditioner will build a coating to protect the surface from scratches and make it easier to clean.



Questions? Use This Problem Solver

PROBLEM	POSSIBLE CAUSE AND REMEDY
COOKING UNIT WILL NOT OPERATE	• The circuit breaker in your house has been tripped, or a fuse has been blown. • Pan must be in place for cooking unit to operate. • Non-magnetic cookware in use. See pages 5 and 6. • Glasstop too hot. Operation will resume when temperature falls.
COOKING LIGHT GOES OUT	• Pan removed while cooking unit was in operation. See page 5. • Glasstop too hot. • Pan too small. See page 6. • Pan off center. See page 6.
GLASS SURFACE FRACTURED	• Take to service center.
AM RADIO INTERFERENCE	• If radio is in use near the cooking unit you may notice some AM radio interference. This is normal and does not indicate a problem with the cooking unit.

If you need more help...call, toll free:
The GE Answer Center®
800.626.2000
Consumer information service

If You Need Service

To obtain service, see your warranty on the back page of this book.

We're proud of our service and want you to be pleased. If for some reason you are not happy with the service you receive, here are three steps to follow for further help.

FIRST, contact the people who serviced your appliance. Explain why you are not pleased. In most cases, this will solve the problem.

NEXT, if you are still not pleased, write all the details—including your phone number—to:

Manager, Consumer Relations
General Electric
Appliance Park
Louisville, Kentucky 40225

FINALLY, if your problem is still not resolved, write:

Major Appliance
Consumer Action Panel
20 North Wacker Drive
Chicago, Illinois 60606

YOUR INDUCTION COOKING UNIT WARRANTY

Save proof of original purchase date such as your sales slip or cancelled check to establish warranty period.

WHAT IS COVERED

LIMITED ONE-YEAR WARRANTY

For one year from date of original purchase, we will provide, free of charge, parts and service labor to repair or replace ***any part of the cooking unit*** that fails because of a manufacturing defect.

To avoid any trip charges, you must take the cooking unit to a General Electric Factory Service Center or a General Electric Customer Care® servicer and pick it up following service. In-home service is also available, but you must pay for the service technician's travel costs to your home.

This warranty is extended to the original purchaser and any succeeding owner for products purchased for ordinary home use in the 48 mainland states, Alaska, Hawaii and Washington, D.C.

All warranty service will be provided by our Factory Service Centers or by our authorized Customer Care® servicers during normal working hours.

Look in the White or Yellow Pages of your telephone directory for GENERAL ELECTRIC COMPANY, GENERAL ELECTRIC FACTORY SERVICE, GENERAL ELECTRIC-HOTPOINT FACTORY SERVICE or GENERAL ELECTRIC CUSTOMER CARE® SERVICE.

WHAT IS NOT COVERED

- Improper installation.

If you have an installation problem, contact your dealer or installer. You are responsible for providing adequate electrical, exhausting and other connecting facilities.

- Replacement of house fuses or resetting of circuit breakers.
- Failure of the product if it is used for other than its intended purpose or used commercially.
- Damage to product caused by accident, fire, floods or acts of God.

WARRANTOR IS *NOT* RESPONSIBLE FOR CONSEQUENTIAL DAMAGES.

Some states do not allow the exclusion or limitation of incidental or consequential damages, so the above limitation or exclusion may not apply to you. This warranty gives you specific legal rights, and you may also have other rights which vary from state to state. To know what your legal rights are in your state, consult your local or state consumer affairs office or your state's Attorney General.

Warrantor: General Electric Company

If further help is needed concerning this warranty, contact:
Manager—Consumer Affairs, General Electric Company, Appliance Park, Louisville, KY 40225

Part No. 205C1026 P40
Pub. No. 49-4710
12-85

GENERAL ELECTRIC

JIC 100
Printed in Japan