Use and Care & Installation Guide

Refrigerator



Safety Instructions 3



Operating Instructions, Tips

Automatic Icemaker.....12
CFC Disposal.....2
Food Storage Suggestions.....6, 7
Ice Dispenser.....13, 14
Icemaker Accessory Kit.....12
Power Saver Switch.....5
Shelves.....8, 9
Storage Drawers.....10, 11
Temperature Controls.....5



Care and Cleaning

Behind Refrigerator.....16
Cleaning—Inside and Outside.....15
Clearances.....19
Drawer and Cover Removal.....16, 17
Light Bulb Replacement.....17
Location.....19
Moving and Vacation.....18
Rollers.....19
Under Refrigerator.....16
Water Filter Accessory.....12
Water Supply to Icemaker.....18



Problem Solver.....27–29

Normal Operating Sounds.....27

More questions ?...In the United States call
GE Answer Center® 800.626.2000
In Canada consult your local telephone directory for the Camco Service Center



Installation.....20–26

Adapter Plug.....20
Electrical Requirements.....20
Extension Cords.....20
Grounding.....20
Reversing the Door Swing.....23–26
Water Line Installation.....21, 22



Consumer Services.....2, 4

Appliance Registration.....2
Model and Serial Numbers.....2
Warranty for Canadian Customers.....31
Warranty for U. S. Customers.....Back Cover

Top-Mount No-Frost
Models 18, 19, 21, 22, 24 and 25

GE Appliances



WELCOME

Welcome to the GE family. We're proud of our quality products and we believe in dependable service. You'll see it in this easy-to-use guide and you'll hear it in the friendly voices of our customer service staff. Best of all, you'll experience these values each time you open your refrigerator. That's important, because your new refrigerator will be part of your family for a long time.

CFC DISPOSAL

Your old refrigerator has a cooling system that used CFCs (chlorofluorocarbons). CFCs are believed to harm stratospheric ozone.

If you are throwing away your old refrigerator, make sure the CFC refrigerant is removed for proper disposal by a qualified servicer. If you intentionally release this CFC refrigerant you can be subject to fines and imprisonment under provisions of the federal Clean Air Act.

HELP US HELP YOU…

Read this guide carefully.

It is intended to help you operate and maintain your new refrigerator properly.

Keep it handy for answers to your questions.

If you don't understand something or need more help:

In the United States, call:

GE Answer Center®
800.626.2000
24 hours a day, 7 days a week

In Canada, write:

Manager, Consumer Relations
2645 Skymark Ave.
Mississauga, Ontario
Canada L4W 4H2

If you received a damaged refrigerator…

Immediately contact the dealer (or builder) that sold you the refrigerator.

Save time and money. Before you request service…

Check the Problem Solver section in this guide. It lists minor operating problems that you can correct yourself.

Write down the model and serial numbers.

You'll see them on a label on the left side, near the top of the fresh food compartment.

These numbers are also on the Consumer Product Ownership Registration Card that came with your refrigerator.

Before sending in this card, please write these numbers here:

Model Number

Serial Number

Use these numbers in any correspondence or service calls concerning your refrigerator.

IMPORTANT: You must provide proof of purchase or installation date for in-warranty service.

Date Purchased

Date Installed

Builder/Dealer Name

Address

Phone

IMPORTANT SAFETY INSTRUCTIONS

Read all instructions before using this appliance.

WARNING—When using this appliance, always exercise basic safety precautions, including the following:

- **Use this appliance only for its intended purpose** as described in this Use and Care Guide.



- **This refrigerator must be properly installed and located in accordance with the Installation Instructions before it is used.**



- **Never unplug your refrigerator by pulling on the power cord.** Always grip plug firmly and pull straight out from the outlet.
- **Repair or replace immediately all electric service cords that have become frayed or otherwise damaged.** Do not use a cord that shows cracks or abrasion damage along its length or at either the plug or connector end.
- **When moving your refrigerator away from the wall, be careful not to roll over or damage the power cord.**

- **Do not allow children to climb, stand or hang on the shelves in the refrigerator.** They could damage the refrigerator and seriously injure themselves.



- **If your old refrigerator is still around the house but not in use, be sure to remove the doors.** This will reduce the possibility of danger to children.

- **After your refrigerator is in operation, do not touch the cold surfaces in the freezer compartment, particularly when hands are damp or wet.** Skin may adhere to these extremely cold surfaces.
- **If your refrigerator has an automatic icemaker,** avoid contact with the moving parts of the ejector mechanism, or with the heating element that releases the cubes. Do not place fingers or hands on the automatic icemaking mechanism while the refrigerator is plugged in.
- **Don't refreeze frozen foods which have thawed completely.** The United States Department of Agriculture in Home and Garden Bulletin No. 69 says:

  "…You may safely refreeze frozen foods that have thawed if they still contain ice crystals or if they are still cold—below 40°F. (4°C.).

  "…Thawed ground meats, poultry or fish that have any off-odor or off-color should not be refrozen and should not be eaten. Thawed ice cream should be discarded. If the odor or color of *any* food is poor or questionable, get rid of it. The food may be dangerous to eat.

  "Even partial thawing and refreezing reduces the eating quality of foods, particularly fruits, vegetables and prepared foods. The eating quality of red meats is affected less than that of many other foods. Use refrozen foods as soon as possible to save as much of their eating quality as you can."



- **Unplug your refrigerator before cleaning and making repairs.**
  NOTE: We strongly recommend that any servicing be performed by a qualified individual.
- **Before replacing a burned-out light bulb,** the refrigerator should be unplugged in order to avoid contact with a live wire filament. (A burned-out light bulb may break when being replaced.)
  NOTE: Turning control to OFF position does not remove power to the light circuit.
- **Do not store or use gasoline or other flammable vapors and liquids in the vicinity of this or any other appliance.**

SAVE THESE INSTRUCTIONS



We'll Be There

With the purchase of your new GE appliance, receive the assurance that if you ever need information or assistance from GE, we'll be there. All you have to do is call!

GE Answer Center® In the United States: 800.626.2000

Whatever your question about any GE major appliance, GE Answer Center® information service is available to help. Your call—and your question—will be answered promptly and courteously. And you can call any time. GE Answer Center® service is open 24 hours a day, 7 days a week.

In Canada contact Manager, Consumer Relations, Camco, Inc., 2645 Skymark Avenue, Mississauga, Ontario, Canada L4W 4H2

In-Home Repair Service In the United States: 800-GE-CARES (800-432-2737)

A GE consumer service professional will provide expert repair service, scheduled at a time that's convenient for you. Many GE Consumer Service company-operated locations offer you service today or tomorrow, or at your convenience (7:00 a.m. to 7:00 p.m. weekdays, 9:00 a.m. to 2:00 p.m. Saturdays). Our factory-trained technicians know your appliance inside and out—so most repairs can be handled in just one visit.

In Canada consult your local telephone directory for the Camco Service or Authorized Service Center nearest you.

For Customers With Special Needs... In the United States: 800.626.2000

Upon request, GE will provide Braille controls for a variety of GE appliances, and a brochure to assist in planning a barrier-free kitchen for persons with limited mobility. To obtain these items, free of charge, call 800.626.2000.

Consumers with impaired hearing or speech who have access to a TDD or a conventional teletypewriter may call 800-TDD-GEAC (800-833-4322) to request information or service.

In Canada contact Manager, Consumer Relations, Camco, Inc., 2645 Skymark Avenue, Mississauga, Ontario, Canada L4W 4H2

Service Contracts In the United States: 800-626-2224

You can have the secure feeling that GE Consumer Service will still be there after your warranty expires. Purchase a GE contract while your warranty is still in effect and you'll receive a substantial discount. With a multiple-year contract, you're assured of future service at today's prices.

800-461-3636 In Canada

Parts and Accessories In the United States: 800-626-2002

Individuals qualified to service their own appliances can have parts or accessories sent directly to their home. The GE parts system provides access to over 47,000 parts...and all GE Genuine Renewal Parts are fully warranted. VISA, MasterCard and Discover cards are accepted.

User maintenance instructions contained in this booklet cover procedures intended to be performed by any user. Other servicing generally should be referred to qualified service personnel. Caution must be exercised, since improper servicing may cause unsafe operation.

In Canada consult your local telephone directory for the Camco Service or Authorized Service Center nearest you.

TEMPERATURE CONTROLS

The temperature controls in your refrigerator have letters and numbers. Initially set the freezer control at "C" and the fresh food control at "5."

The fresh food control maintains the temperatures throughout the refrigerator.



Moving the fresh food control to "OFF" stops cooling in both areas—fresh food and freezer—but does not shut off power to the refrigerator.

The freezer control moves a damper to change the amount of cold air that moves from the freezer to the fresh food compartment.

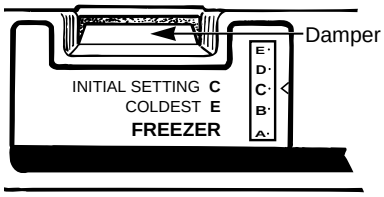

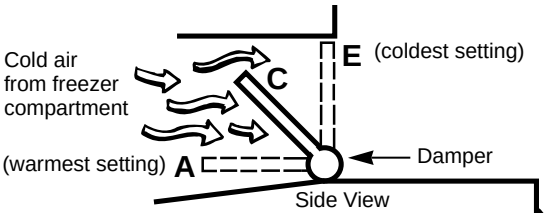

Power Saver Switch

The power saver switch is located on the temperature control panel. To reduce the amount of electricity required to operate your refrigerator, push switch to the POWER SAVER setting.

This turns off the unit in your refrigerator that prevents moisture from forming on the outside.

With this unit turned off, moisture may form on the outside of your refrigerator, especially when the weather is humid. The humidity is most likely to be high in the summer, in the early morning hours, and in homes which are not air conditioned.

Over an extended period of time, moisture that forms on the refrigerator surface may cause deterioration of the paint finish. It will be important to protect the finish by using appliance polish wax as described in the Care & Cleaning section.

The cost to operate the low-wattage unit is about the same as it costs to use two night lights.

When you move the power saver switch from the POWER SAVER setting, low wattage electricity flows through the unit and warms the outside of the refrigerator. Under most conditions, this prevents the forming of moisture or water droplets.

No Defrosting

It is not necessary to defrost the freezer or fresh food compartments. Although your refrigerator is designed and equipped to defrost itself automatically, some frost on packages is normal.

If you turn your household thermostat below 60°F. (16°C.) at night…

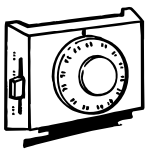

…you may want to move the freezer control one step colder. Cooler temperatures in the house may cause the compressor to operate less frequently, thus allowing the freezer compartment to warm somewhat. To protect your frozen food supply, leave the freezer setting at this colder setting for the entire winter or for as long as you keep your thermostat turned down.

Moving the freezer control to colder setting should have no effect on your fresh food compartment. However, if freezing occurs, move the fresh food control one step warmer.

When you stop turning the thermostat down, turn the refrigerator's controls back to their regular settings.

How to Test Temperatures

Use the milk test for the fresh food compartment. Place a container of milk on the top shelf in the fresh food compartment. Check it a day later. If the milk is too warm or too cold, adjust the temperature controls.

Use the ice cream test for the freezer compartment. Place a container of ice cream in the center of the freezer compartment. Check it after a day. If it's too hard or too soft, adjust the temperature controls.

After changing the controls, always allow 24 hours for the refrigerator to reach the temperature you have set.

FOOD STORAGE SUGGESTIONS

Use these storage times as guidelines for good eating quality. The type of packaging used and the storage temperatures will affect how long food will keep in the refrigerator.

New techniques are constantly being developed. Consult the County Extension Service or your local Utility Company for the latest information on freezing and storing foods.

Foods	Refrigerator Time	Freezer Time	Storage Tips
DAIRY PRODUCTS			
Butter	1–2 weeks	6–9 months	Store butter covered in the Dairy Compartment to prevent butter from absorbing odors.
Milk & cream	1 week after the "sell by" date	Not recommended	Refrigerate immediately after use. Close tightly. Don't drink out of the carton because enzymes from your mouth cause milk to sour. Don't freeze cream unless whipped.
Cream cheese, cheese spread & cheese food	1–2 weeks after the "sell by" date	Not recommended	Wrap tightly.
Cottage cheese	5–7 days after the "sell by" date	Not recommended	
Hard cheese (Swiss, Cheddar & Parmesan)	1–2 months	May become crumbly	Wrap tightly to keep odors confined. Cut off mold if it develops on the surface.
Sour cream	10 days after the "sell by" date	Not recommended	
EGGS			
Eggs in the shell	1 week after the "sell by" date	Not recommended	Cover and store small ends down.
Leftover yolks or whites	2–4 days	9–12 months	
FRESH FRUITS	Ripening of many fruits is slowed by refrigeration. Store fruits in the storage drawer with the control on the "Fruits" setting.		
Apples	1 month	6–12 months	
Avocados	3–5 days	6–12 months	Ripen at room temperature before refrigerating. Avocados will darken when refrigerated.
Berries & cherries	2–3 days	6–12 months	Store covered or in the storage drawer to prevent moisture loss.
Citrus fruits	1–2 weeks	Not recommended	Store uncovered.
Grapes	3–5 days	6–12 months	Store covered or in the storage drawer to prevent moisture loss.
Peaches, nectarines, plums & apricots	3–5 days	6–12 months	Ripen at room temperature before refrigerating.
Pineapples, cut	2–3 days	6–12 months	Use quickly for best eating quality.



Foods	Refrigerator Time	Freezer Time	Storage Tips
FRESH VEGETABLES	Since vegetables remain fresh longest in a moist environment, they should be stored in the Fresh drawer with the control on the "Vegetables" setting. If the drawers are full, store vegetables in plastic bags or plastic containers to prevent moisture loss.		
Asparagus	2–3 days	8–12 months	Don't wash before refrigerating. Store in the drawer.
Brussels sprouts & broccoli	3–5 days	8–12 months	Wrap well! These odors will travel to other foods.
Cabbage & celery	1–2 weeks	Not recommended	Wrap well! These odors will travel to other foods.
Cauliflower & snap beans	1 week	8–12 months	Wrap well! These odors will travel to other foods.
Carrots, parsnips, beets, radishes & turnips	2 weeks	8–12 months	Remove tops and wrap well.
Green peas & lima beans	3–5 days	8–12 months	Nature's wrapping is best. Leave them in their pods until ready to use.
Lettuce & other salad greens	1 week	Not recommended	Wash. Drain well. Refrigerate in the drawer.
Onions, green	3–5 days	8–12 months	Wrap well! These odors will travel to other foods.
Peppers & cucumbers	1 week	8–12 months	Wrap well! These odors will travel to other foods.
FRESH POULTRY & FISH			
Chicken	1–2 days	6–12 months	Can be kept in original packaging for refrigeration. Place in the Meat drawer with the control on the "Fresh Meat" setting. When freezing longer than 2 weeks, overwrap with suitable freezer wrap to reduce freezer burn.
Turkey, duck & goose	1–2 days	4–6 months	
Fish	1–2 days	8–12 months	
FRESH MEATS			
Beef, ground	1–2 days	4–6 months	Can be kept in original packaging for refrigeration. Place in the Meat drawer with the control on the "Fresh Meat" setting. When freezing longer than 2 weeks, overwrap with suitable freezer wrap to prevent freezer burn.
Beef, roast & steak	3–5 days	9–12 months	
Pork	3–5 days	6–9 months	
Veal	3–5 days	4–6 months	
Sausage, ground	1–2 days	1–3 months	
Lamb	3–5 days	9–12 months	
PROCESSED MEATS			
Bacon	7 days	1 month	Processed meats should be tightly wrapped and stored in the Meat drawer with the control on the "Deli/Cheese" setting.
Frankfurters	7 days	2 weeks	
Ham, whole	7 days	1–3 months	
half	5 days	1–3 months	
slices	3 days	1–2 months	
Luncheon meat	3–5 days	Not recommended	Unopened, vacuum-packed luncheon meat may be kept up to 2 weeks.
Sausage, smoked	7 days	Not recommended	

* Sources: United States Department of Agriculture; Food Marketing Institute; Cooperative Extension Service; Iowa State University

SHELVES

How to Rearrange Your Shelves (on some models)

Shelves in the fresh food and freezer compartments are adjustable.

To remove shelves: Tilt the shelf up at front, then lift it up and out of tracks on the rear wall of the refrigerator.

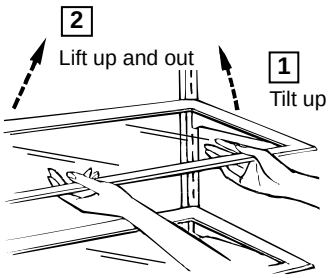

To replace shelves: Select the desired shelf height. With shelf front raised slightly, engage top hooks in tracks at rear of cabinet. Then lower front of shelf until it locks into position.

Wire shelves (on some models) are adjustable in the same manner.

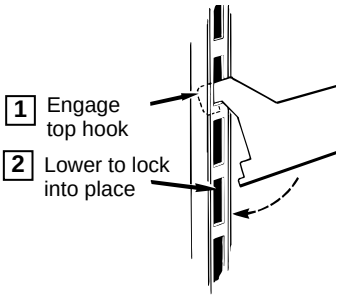

Removable Wine Rack (on some models)

The wine rack is designed to hold a bottle on its side.

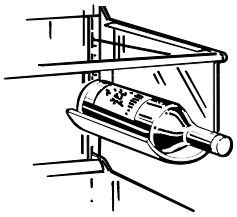

Extra Freezer Shelf (on some models)

Some models have an extra freezer shelf that allows you to use the freezer space more efficiently.

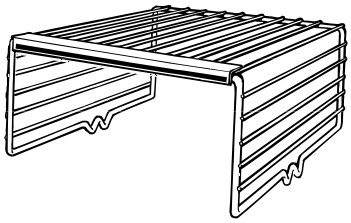

Porta-Bins on the Doors (on some models)

Adjustable Porta-Bins on fresh food and freezer compartment doors can easily be carried from the refrigerator to the work area.

To remove: Slide Porta-Bin forward on molded supports until it comes completely out of the door.

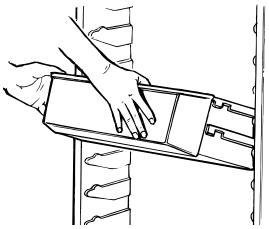

To relocate: Select desired shelf height, engage Porta-Bins in the molded supports of the door, and slide in. Porta-Bin will hook in place.

Snuggers (on some models)

Snuggers are designed to give you storage flexibility in Porta-Bins and on your fresh food door shelves. Place index finger and middle finger on either side of the snugger near the front and simply move it back and forth to fit your needs.

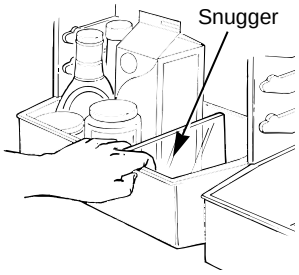

Two-Position Freezer Shelf (on some models)

To relocate the two-position freezer shelf, lift slightly and move it sideways to free the ends of the shelf from the holes in the walls. Then tilt the shelf and take it out. To reinstall the shelf, first insert one end and then the other.

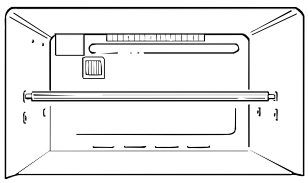

For models without an icemaker, the shelf can be placed in either position.

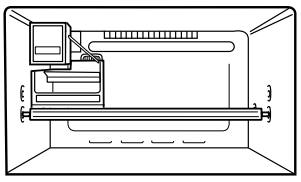

For models with an icemaker, the shelf must be placed in the lower position.

Features vary by model

Quick Serve™ System (on some models)

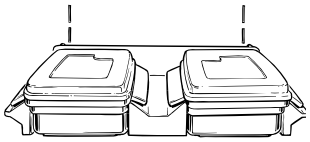

Cooking-serving-storage dishes with durable see-through lids fit into a rack that hangs on the fresh food or freezer compartment door.
Dishes can be removed from and returned to the rack as needed, and the rack can be removed and relocated on either door in the same manner as the door bins.

Dishes and lids are safe for use in microwave ovens, refrigerators, freezers, and are dishwasher-safe. The dishes should not be used for cooking high-fat foods, such as bacon, and high-sugar foods, such as candy and syrup. The high temperatures of the fat and sugar can cause bubbles to form on the inside of the dish.

CAUTION:

Dishes and lids are not designed for use on the range top, broiler or in the regular oven. Such use can be hazardous.

Quick Store Bin (on some models)



This removable tilt-out bin can be located on the fresh food or freezer compartment door. It has been designed for convenient storage of those frequently used items that do not fit easily into a Porta-Bin or soon-to-be-used items that require covered storage to keep from drying out.

To open, push the latch up and pull the bin handle forward.

To avoid damaging the refrigerator, make sure the bin is closed and latched before closing the refrigerator door.

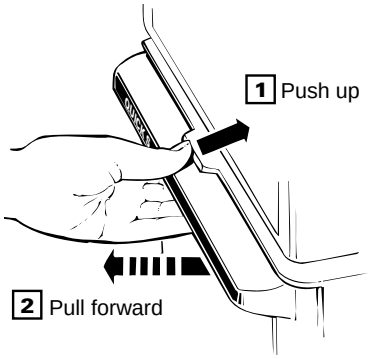

To remove the bin, lift it up and out of the bin housing.

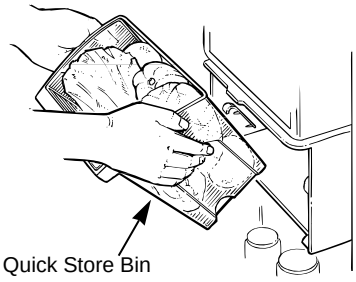

To relocate the Quick Store unit, lift the bin housing up and out of the molded supports on the door, move it to the desired new location, and lower it onto the molded supports on the door. You do not have to remove the bin from the housing when relocating the Quick Store unit.

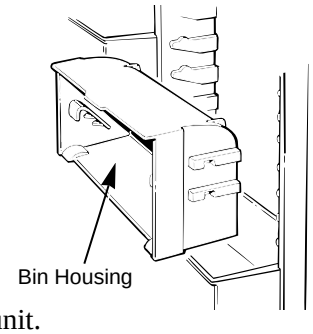

Features vary by model

STORAGE DRAWERS

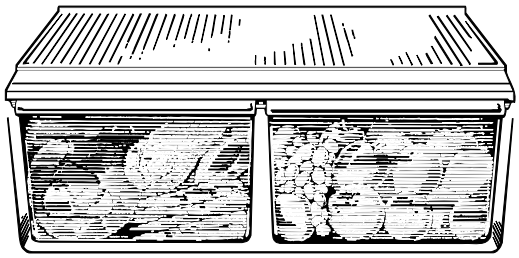

Fruit & Vegetable Drawers

The storage drawers at the bottom of the fresh food compartment are designed to provide high humidity levels required by most vegetables and lower humidity levels required for most fruits.

When replacing the drawers, always push them all the way in.

Storage time will depend upon the type of food and its condition when placed in the drawers.

Excess water that may accumulate in the bottom of the drawers should be emptied and the drawers wiped dry.

Cool 'n Fresh Drawer (on some models)

This refrigerated drawer is designed to provide lower humidity storage for items such as:

- Apples
- Apricots
- Grapes
- Mushrooms
- Nectarines
- Oranges
- Peaches
- Pears
- Raspberries
- Squash, summer
- Strawberries
- Tangerines

Moist'n Fresh Drawer (on some models)

This refrigerated drawer is designed to keep unwrapped foods fresh by retaining the natural moisture content of foods such as:

- Artichokes
- Asparagus
- Beets, topped
- Blueberries
- Carrots
- Celery
- Cherries
- Corn
- Currants
- Greens, leafy
- Lettuce
- Parsley
- Peas, green
- Plums
- Radishes
- Rhubarb
- Spinach
- Tomatoes, ripe

As in any refrigerated storage area, **it is recommended that foods with strong odors be stored wrapped**—foods such as:

- Broccoli
- Brussels sprouts
- Cabbage
- Cauliflower
- Green Onions
- Parsnips
- Turnips

Features vary by model

Adjustable Humidity Drawers

(on some models)

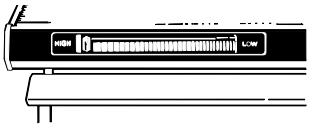

These drawers have individual, adjustable humidity controls that let you regulate the amount of cold air entering the drawers.

Slide the control all the way to the HIGH setting and the drawer provides high humidity recommended for most vegetables.

Slide the control all the way to the LOW setting to provide lower humidity levels recommended for most fruits.

Snacks Drawer (on some models)

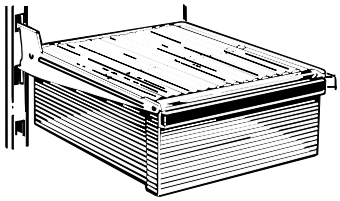

The slide-out Snacks drawer can be removed and taken to the sink or food preparation area. You may also relocate it and the shelf to which it attaches within the fresh food compartment to suit your storage needs.

Adjustable Temperature Meat Drawer (on some models)

This drawer is designed to store fresh meats where they keep best—in the coldest part of the refrigerator. The "Fresh Meats Zone" is at the top left side of the refrigerator. You must use one of these 6 slots to keep the drawer in the coldest zone. This allows air from the freezer to circulate around the drawer to keep it very cold.

You can move the drawer to any location if you don't want the extra cold storage.

The variable temperature control lever lets you regulate the amount of cold air surrounding the drawer.

When the lever is set at COLDEST, the damper over the opening in the drawer is fully open to provide the coldest storage area.

When the lever is set at COLD, the damper is fully closed. Normal refrigerator temperatures will be maintained.

Variable settings between these extremes may be selected.

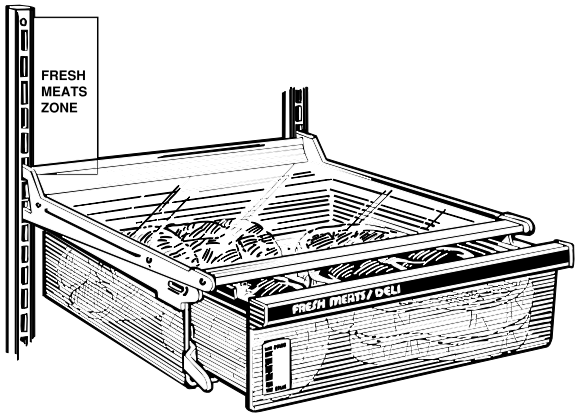

When the drawer is placed in the top 6 slots on the left side and the lever is set at COLDEST, air from the freezer is forced around the drawer to keep it very cold.

Features vary by model

AUTOMATIC ICEMAKER

(on some models)

A newly-installed refrigerator may take 8 to 12 hours to begin making ice.

Your icemaker will produce eight cubes per cycle—approximately 100 cubes in a 24-hour period, depending on freezer compartment temperature, room temperature, number of door openings and other use conditions.

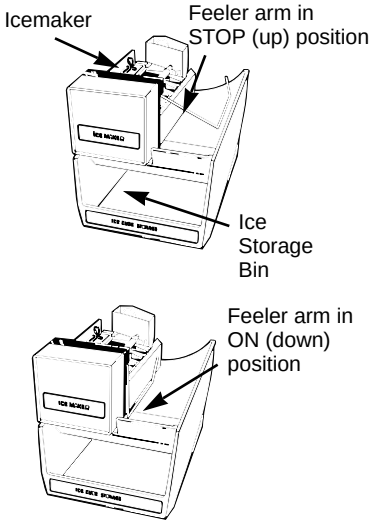

If your refrigerator is operated before the water connection is made to the icemaker, keep the feeler arm in the STOP (up) position.

When the refrigerator has been connected to the water supply, move the feeler arm to the ON (down) position.

The ice maker will fill with water when it cools to freezing. A newly-installed refrigerator may take 8 to 12 hours to begin making ice cubes.

Throw away the first few batches of ice. This flushes away impurities in the water line.

Icemaking will continue until the feeler arm senses a sufficient accumulation of ice cubes in the storage bin and halts the operation temporarily. For maximum ice storage, level the stored cubes with your hand occasionally. Be sure nothing interferes with the swing of the feeler arm.

The icemaker ejects cubes in groups of eight and it is normal for several cubes to be joined together.

Move the icemaker feeler arm to the STOP (up) position when:

- home water supply is to be off for several hours.
- ice storage bin is to be removed for a period of time.
- going away on vacation, at which time you should also turn off the valve in the water supply line to your refrigerator.
- turning the fresh food control to the OFF position.

If ice is not used frequently, old ice cubes will become cloudy and taste stale. Empty the ice storage bin periodically and wash it in lukewarm water. Be sure to allow the storage bin to dry before replacing it—otherwise ice cubes may stick to other parts of the icemaker.

If this is your first icemaker, you'll hear occasional sounds that may be unfamiliar. They are normal icemaking sounds and are not a cause for concern.

Water Filter Accessory

Your ice cubes can only be as fresh-tasting as the water that produces them. That's why it's a good idea to purify your water with a water filter.

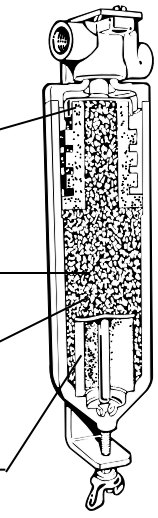

REMOVES SEDIMENT
Rigid, porous graded density depth cellulose fiber cartridge catches dirt, rust particles, sand and silt.

REMOVES ODORS
Activated charcoal granules remove musty, stale odors.

IMPROVES TASTE
Activated charcoal granules remove oily, medicinal, plastic and metallic tastes.

REDUCES SCALE
Special crystals reduce hard scale deposit formation.

The water filter is an option at extra cost and is available from your dealer. Specify WR97X0214. It has complete installation instructions and installs on 1/4″ O.D. copper water line.

Icemaker Accessory Kit

If your refrigerator did not come already equipped with an automatic icemaker, an Icemaker Accessory Kit is available at extra cost. Check the back of the refrigerator for the specific icemaker kit needed for your model.

Features vary by model

ICE DISPENSER

(on some models)

A newly-installed refrigerator may take 8 to 12 hours to begin making ice.

How the Ice Dispenser Works

When the selector switch is set at ICE CUBES…

(1) The automatic icemaker fills the

(2) ice storage bin.

(3) Pushing on the ice cradle activates the

(4) motor-powered auger which moves the ice cubes into glass through the

(5) chute.

When the selector switch is moved to CRUSHED ICE, a flipper directs the cubes through the

(6) crusher and crushed ice falls through the chute.

Spills are caught in the

(7) spill shelf.

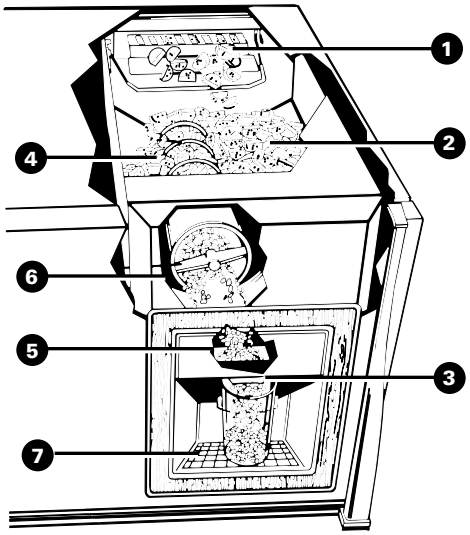

CAUTION: Never put fingers or any other objects into the ice crusher discharge opening.

Before Using Your Icemaker and Dispenser

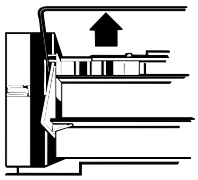

If your refrigerator is operated before the water connection is made, remove the ice storage bin and make sure the icemaker feeler arm is in the STOP (up) position.

When the refrigerator has been connected to the water supply, move the feeler arm to the ON (down) position.

The icemaker will fill with water when it cools to freezing. A newly-installed refrigerator may take 8 to 12 hours to begin making ice cubes.

Once Your Icemaker is in Operation

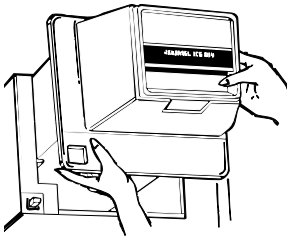

When the water supply has been connected to the icemaker, remove the ice storage bin, move the icemaker feeler arm to the ON (down) position, and replace the bin.

To remove the ice storage bin, lift the front of the bin and pull the bin straight out while supporting it at front and rear.

To replace the ice storage bin: Slide it back on the ice bin shelf. If the bin does not go all the way back, remove it and rotate the drive mechanism 1/4 turn. Then push the bin back again.

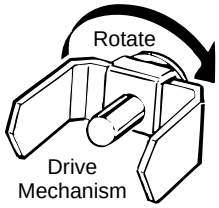

(continued next page)

Features vary by model

ICE DISPENSER
(continued)

To Use the Dispenser

Set the selector switch to ICE CUBES or CRUSHED ICE.

Press the rim of the glass gently but firmly against the rubber-cushioned cradle.

To stop dispensing, release pressure from the cradle and hold the glass under the chute to catch the last bits of ice or droplets of water.

After crushed ice is dispensed, some water may drip from the chute.



Do not pour water in the spill shelf because it is not self-draining. Pour it in kitchen sink. Any large amount of water should be wiped dry right away. The shelf and its grille should be cleaned regularly.

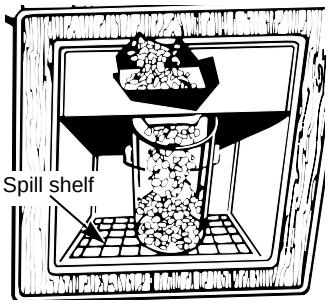

If This is Your First Icemaker

Some crushed ice may be dispensed even though you selected CUBES. This happens occasionally when a few cubes accidentally get directed to the crusher.

Sometimes a mound of snow will form on the door in the ice chute. This condition is normal and usually occurs when you have dispensed crushed ice repeatedly. The snow will eventually evaporate.

Sometimes crushed ice will spray beyond the glass. To avoid this, hold the glass up close to the chute.

If Ice Clumps Form in the Storage Bin

When ice is not used frequently ice clumps may form in the storage bin, which may jam the motor-powered auger which moves the ice through the chute. If this happens:

- remove the storage bin from the freezer compartment
- break up ice clumps with fingertip pressure and discard remaining clumps
- replace the bin before remaining cubes melt and fuse together

Important Facts About Your Dispenser

- **Avoid overfilling glass with ice and use of narrow or extra-tall glasses.** Backed-up ice can jam the chute or cause the door in the chute to freeze shut. Periodically open the freezer compartment door and look down into the chute. If ice is blocking the chute, poke it through with a wooden spoon.
- **To help keep bits of ice from being sprayed beyond the glass,** place glass close to ice chute—but not so close that it blocks outcoming ice.
- **Ice should not be dispensed into thin glasses, fine china or delicate crystal—**they can crack or chip from the combined pressure of your hand pressing them against the cradle and ice dropping into them.
- **Add ice before filling the glass with a beverage.** This will prevent splashing, which is annoying and which, if the splash reaches the ice selector switch, could cause it to stick or bind.
- **Beverages and foods should not be quick-chilled in the ice storage bin.** Cans, bottles or food packages in the storage bin may cause the icemaker or auger to jam.
- **Do not add ice from trays or bags to the storage bin.** It may not crush or dispense well.

Features vary by model

CARE AND CLEANING



Cleaning—Outside

The ice dispenser spill shelf (on some models) should be wiped dry immediately to prevent spotting if excessive spills occur. Water left on the shelf may leave deposits that you can remove by soaking with undiluted vinegar. You can also use a paste of non-precipitating water softener (such as Calgon brand) and water, or 1 teaspoon (5 ml) of citric acid powder per pint (500 ml) of hot tap water. Soak until the deposit disappears or becomes loose enough to rinse away. Usually 30 minutes soaking time is adequate. Avoid using wax on the spill shelf and trim.

The door handles and trim (on some models) can be cleaned with a cloth dampened with a solution of mild liquid dishwashing detergent and water. Dry with a soft cloth. Don't use wax on the door handles and trim.

The soft door handles (on some models) are easy to keep clean if they are waxed every few months. Use a household wax such as Pledge brand or Jubilee brand to coat the handles. Soil will then easily wash off with a dish detergent and water or a non-abrasive all-purpose cleaner.

Keep the finish clean. Wipe with a clean cloth lightly dampened with kitchen appliance wax or mild liquid dishwashing detergent. Dry and polish with a clean, soft cloth. Do not wipe the refrigerator with a soiled dishwashing cloth or wet towel. These may leave a residue that can erode the paint. Do not use scouring pads, powdered cleaners, bleach or cleaners containing bleach because these products can scratch and weaken the paint finish.

Protect the paint finish. The finish on the outside of the refrigerator is a high quality, baked-on paint finish. With proper care, it will stay new-looking and rust-free for years. Apply a coat of kitchen/appliance wax when the refrigerator is new and then at least twice a year.

Appliance Polish Wax & Cleaner is available from Service and Parts Centers.

Cleaning—Inside

Inside the fresh food and freezer compartments should be cleaned at least once a year. Unplug the refrigerator before cleaning. If this is not practical, wring excess moisture out of sponge or cloth when cleaning around switches, lights or controls. Apply an appliance wax polish to the inside surface between the doors.

Use warm water and baking soda solution—about a tablespoon (15 ml) of baking soda to a quart (1 L) of water. This both cleans and neutralizes odors. Rinse thoroughly with water and wipe dry.

Other parts of the refrigerator—including door gaskets, meat and vegetable drawers, ice storage bin and all plastic parts—can be cleaned the same way. After cleaning door gaskets, apply a thin layer of petroleum jelly to the door gaskets at the hinge side. This helps keep the gaskets from sticking and bending out of shape. Do not use cleansing powders or other abrasive cleaners.

Avoid cleaning cold glass shelves (on some models) with hot water because the extreme temperature difference may cause them to break.

To help prevent odors, leave an open box of baking soda in the rear of the refrigerator, on the top shelf. Change the box every 3 months. An open box of baking soda in the freezer will absorb stale freezer odors.

Do not wash any plastic parts from your refrigerator in your automatic dishwasher.

Quick Serve dishes and lids can be cleaned in an automatic dishwasher or by hand with liquid dishwashing detergent and water. You can remove stains by soaking them in a bleach and water solution—1 part chlorine bleach to 3 parts water. (Stubborn stains may require soaking.) Use a plastic scouring pad to remove burned-on soil. Do not use cleansing powders or other abrasive cleaners.

(continued next page)

CARE AND CLEANING
(continued)

Under Refrigerator

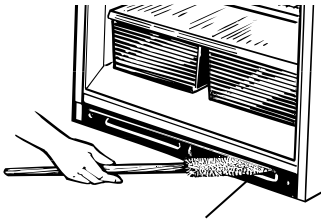

Clean the condenser coils at least once a year.

For most efficient operation, you need to keep the area under the refrigerator clean. Remove the base grille and either sweep away or vacuum up dust that is readily accessible. For best results, use a brush specially designed for this purpose. It is available at most appliance parts stores. This easy cleaning operation should be done at least once a year.

Behind Refrigerator

Care should be taken in moving your refrigerator away from the wall. All types of floor coverings can be damaged, particularly cushioned coverings and those with embossed surfaces. Pull the refrigerator straight out and return it to position by pushing it straight in. Moving your refrigerator in a side direction may result in damage to your floor covering or refrigerator.

When pushing the refrigerator back, make sure you don't roll over the power cord or icemaker supply line (on some models).

Storage Drawer and Drawer Cover Removal

Drawers at the bottom of the fresh food compartment will stop before coming all the way out of the refrigerator, to help prevent contents from spilling onto the floor. These drawers can be removed easily by lifting the sides up slightly while pulling the drawers past the ''stop'' location.

To remove the drawers and their covers when the fresh food compartment door cannot be opened fully, follow the procedure that applies to your model.

Two Drawers (on some models)

1. Remove the drawer farthest from the door.

2. Remove the other drawer.

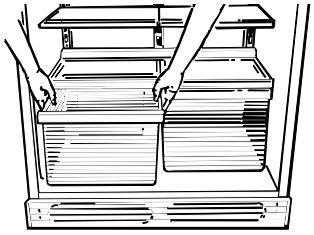

On models with a bottom door shelf that blocks the other drawer, slide the other drawer toward the middle and remove it.

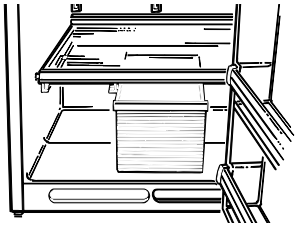

3. Remove the glass cover. Reach in, push the front of the glass cover up and, at the same time, pull it forward as far as it will come. Tilt it and take it out.

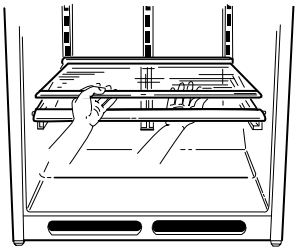

4. Remove the drawer frame. (Always remove the glass cover before you take out the drawer frame.)

Lift the frame off the supports at each side and back, pull it forward, tilt it and take it out.

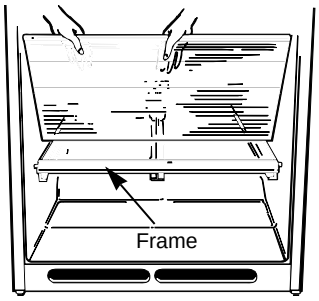

To replace:

1. Lower the frame until it rests on the supports at each side and back.

2. Replace the drawers.

If you removed the drawer slide, replace it with the sloped end at the front.

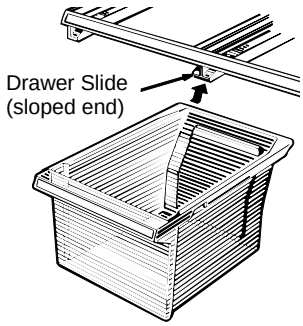

a. Slide one side of the drawer onto the drawer slide.

b. Move the slide and drawer all the way to the hinge side until the other side of the drawer rests on the frame.

c. Slide the other drawer into place.

3. Replace the glass cover, pushing its rear edge firmly into the rear frame channel and gently lowering the front into place.

Full-Width Drawer with Plastic Cover

(on some models)

To remove the drawer, lift the front up slightly and pull the drawer straight out.

To remove the cover, lift it off its supports, pull it forward and up, tilt it and take it out.

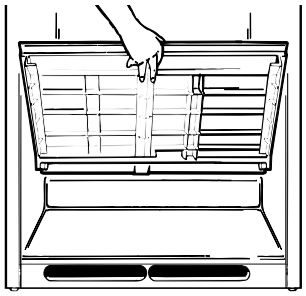

Half-Width Drawer with Plastic Cover

(on some models)

To remove the drawers, lift the front up slightly and pull the drawer straight out.

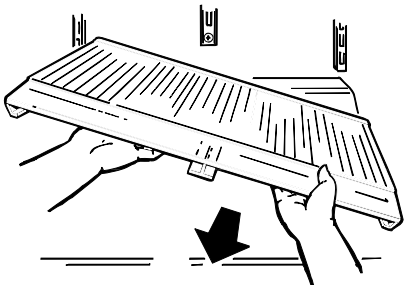

Light Bulb Replacement

A light bulb and socket are located at the top of the fresh food compartment opposite the temperature control panel.

Some models also have a bulb and socket in the upper left corner of the freezer compartment behind a flexible light shield.

To replace either bulb, unplug the refrigerator from its electrical outlet, remove light shield, unscrew the bulb when cool, and replace it with a similar size bulb.

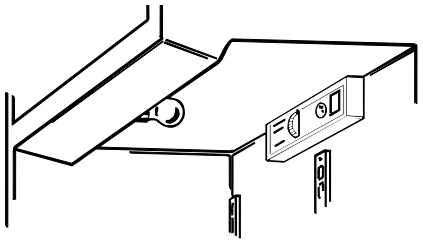

(continued next page)

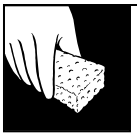

CARE AND CLEANING
(continued)

Preparing for Vacation

For shorter vacations, remove perishable foods and leave controls at regular settings. However, if room temperature is expected to drop below 60°F. (16°C.), follow the same instructions as for extended vacations.

For long vacations or absences, remove food and shut off the power to the refrigerator. Move the fresh food control to the "OFF" position, and clean the interior with a baking soda solution of one tablespoon (15 ml) of baking soda to one quart (1 L) of water. Wipe dry. To prevent odors, leave an open box of baking soda in the refrigerator. Leave doors open.

Move icemaker feeler arm to STOP (up) position and be sure to shut off water supply to the refrigerator.

Preparing to Move

Disconnect power cord from wall outlet, remove all food, and clean and dry the interior.

Secure all loose items such as grille, shelves and storage pans by taping them securely in place to prevent damage.

Be sure refrigerator stays in *upright position* during actual moving and in van. Refrigerator must be secured in van to prevent movement. Protect outside of refrigerator with blanket.

Water Supply to Icemaker (on some models)

If your refrigerator has an icemaker, or if you plan to add an icemaker later, the icemaker will have to be connected to a cold water line.

A water supply kit containing copper tubing, shutoff valve, fittings and instructions is available at extra cost from your dealer or GE Service and Parts Centers. There should be sufficient tubing from the cold water supply to the icemaker inlet to allow moving the refrigerator out from the wall several feet (approximately 8 feet [244 cm] of 1/4″ copper tubing in three 10″ [25 cm] diameter coils).

REFRIGERATOR LOCATION

Do not install the refrigerator where the temperature will go below 60°F. (16°C.) because it will not run often enough to maintain proper temperatures.

Do install it on a floor strong enough to support it fully loaded.

To keep energy costs down, avoid locating the refrigerator next to the range or a heating vent.

CLEARANCES

Allow the following clearances for ease of installation, proper air circulation and plumbing and electrical connections:

Sides .....3/4″ (19 mm)

Top .....1″ (25 mm)

Back .....1″ (25 mm)

If Model 19, 22, or 25 is to be installed against a wall on the hinge side, allow 1½″ (44 mm) for door clearance.

ROLLERS

(on some models)

The rollers have 3 purposes:

1. Rollers can be adjusted so the door closes easily when opened about halfway. (Raise the front about 3/4″ [19 mm] from the floor.)
2. Rollers should be adjusted so the refrigerator is firmly positioned on the floor and does not wobble.
3. Rollers allow you to move the refrigerator away from the wall for cleaning.

To adjust the rollers:

1. **Remove the base grille** by grasping the bottom of the grille and pulling it out.

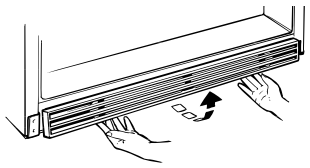

2. Turn the two front roller adjusting screws **clockwise** to raise the refrigerator, **counterclockwise** to lower it.

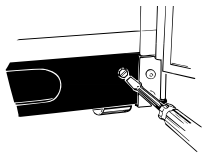

3. **To replace the base grille,** line up the clips on the back of the grille with the openings in the base plate and push the grille forward until it snaps into place.

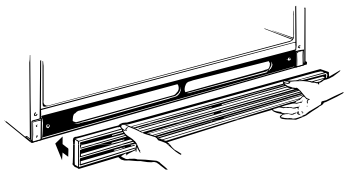

INSTALLATION REQUIREMENTS

IMPORTANT…Please Read Carefully

How to Connect Electricity

For personal safety, this appliance must be properly grounded.

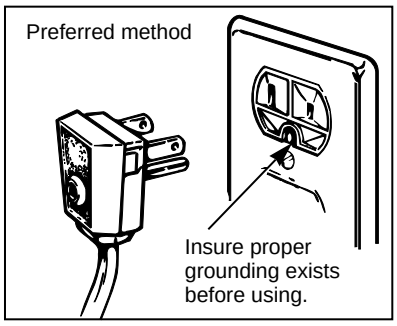

The power cord of this appliance is equipped with a 3-prong (grounding) plug which mates with a standard 3-prong (grounding) wall outlet to minimize the possibility of electric shock hazard from this appliance.

Have the wall outlet and circuit checked by a qualified electrician to make sure the outlet is properly grounded.

Where a standard 2-prong wall outlet is encountered, it is your personal responsibility and obligation to have it replaced with a properly grounded 3-prong wall outlet.

DO NOT, UNDER ANY CIRCUMSTANCES, CUT OR REMOVE THE THIRD (GROUND) PRONG FROM THE POWER CORD.

Use of Adapter Plug

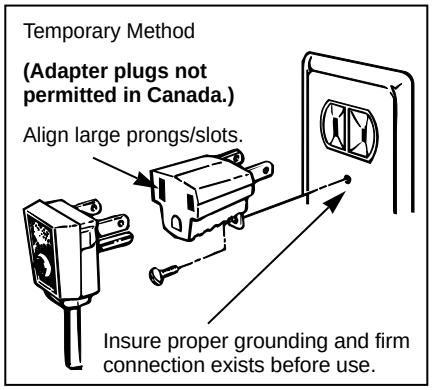

Because of potential safety hazards under certain conditions, we strongly recommend against use of an adapter plug. However, if you still elect to use an adapter, where local codes permit, a **TEMPORARY CONNECTION** may be made to a properly grounded 2-prong wall outlet by use of a UL listed adapter available at most local hardware stores.

The larger slot in the adapter must be aligned with the larger slot in the wall outlet to provide proper polarity in the connection of the power cord.

Use of an adapter plug will increase the clearance needed for the back of the refrigerator.

CAUTION: Attaching the adapter ground terminal to a wall outlet cover screw does not ground the appliance unless the cover screw is metal, and not insulated, and the wall outlet is grounded through the house wiring. You should have the circuit checked by a qualified electrician to make sure the outlet is properly grounded.

When disconnecting the power cord from the adapter, always hold the adapter in place with one hand while pulling the power cord plug with the other hand. If this is not done, the adapter ground terminal is very likely to break with repeated use.

Should the adapter ground terminal break, DO NOT USE the appliance until a proper ground has again been established.

Electrical Requirements

The refrigerator should always be plugged into its own individual electrical outlet which has a voltage rating that matches the rating plate.

This provides the best performance and also prevents overloading house wiring circuits which could cause a fire hazard from overheated wires.

Use of Extension Cords

Because of potential safety hazards under certain conditions, we strongly recommend against the use of an extension cord. However, if you still elect to use an extension cord, it is absolutely necessary that it be a UL-listed 3-wire grounding type appliance extension cord having a grounding type plug and outlet and that the electrical rating of the cord be 15 amperes (minimum) and 120 volts.

WATER LINE INSTALLATION INSTRUCTIONS

CAUTION:

- If you use your refrigerator before connecting the water line, make sure the icemaker feeler arm is kept in the STOP (up) position.
- Do not install the icemaker tubing in areas where temperatures fall below freezing.
- When using any electrical device (such as a power drill) during installation, be sure the device is insulated or wired in a manner to prevent the hazard of electric shock.
- All installations must be in accordance with local plumbing code requirements.

WHAT YOU WILL NEED

- A **cold water supply** is required for automatic icemaker operation. The water pressure must be between 20 and 120 p.s.i.
- **Power drill,** unless you have a self-piercing valve.
- **Copper tubing,** 1/4″ outer diameter to connect the refrigerator to the water supply. Be sure both ends of the tubing are cut square.

To determine how much copper tubing you need: measure the distance from the water valve on the back of the refrigerator to the water supply pipe. Then add 8 feet (244 cm). Be sure there is sufficient extra tubing (about 8 feet [244 cm] coiled into 3 turns of about 10 inches [25 cm] diameter) to allow the refrigerator to move out from the wall after installation. Do not use plastic tubing or plastic fittings because the water supply line is under pressure at all times. Also, certain types of plastic tubing may become brittle with age and crack, resulting in water leakage.

- **Shutoff valve** to connect to the cold water line. The shut-off valve should have a water inlet with a minimum inside diameter of 5/32″ at the point of connection to the COLD WATER LINE. Saddle-type shut-off valves are included in many water supply kits. Before purchasing, make sure a saddle-type valve complies with your local plumbing codes.
- Two 1/4″ outer diameter **compression nuts** and 2 **ferrules (sleeves)**—to connect the copper tubing to the shutoff valve and the refrigerator water valve.
- If your existing water line has a flared fitting at the end, you will need an **adapter** (available at plumbing supply stores) to connect the water line to the refrigerator OR—you can cut off the flared fitting with a **tube cutter** and then use a compression fitting.

WARRANTY INFORMATION

This water line installation is not warranted by the refrigerator or icemaker manufacturer. Follow these instructions carefully to minimize the risk of expensive water damage.

1 SHUT OFF THE MAIN WATER SUPPLY.

Turn on the nearest faucet long enough to clear the line of water.

2 INSTALL THE SHUTOFF VALVE ON THE NEAREST FREQUENTLY USED DRINKING WATER LINE.

Typical ways to connect to water supply

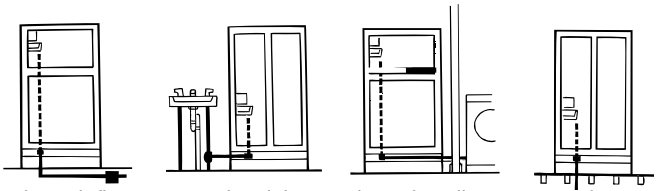

Through floor to basement cold water pipe | Under sink to cold water pipe | Through wall to utility room cold water pipe | In crawl space under house

a. Choose a location for the valve that is easily accessible. It is best to connect into the side of a vertical water pipe. When it is necessary to connect into a horizontal water pipe, make the connection to the top or side, rather than at the bottom, to avoid drawing off any sediment from the water pipe.

b. Drill a 1/4″ hole in the water pipe, using a sharp bit. Remove any burrs resulting from drilling the hole in the pipe. (Do not drill a hole if the valve is a self-piercing type.)

c. Fasten the shutoff valve to the cold water pipe with the pipe clamp.

d. Tighten the clamp screws until the sealing washer begins to swell. Do not overtighten or you may crush the copper tubing.

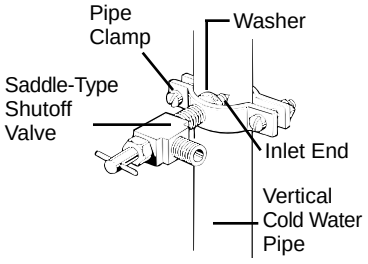

(continued next page)

WATER LINE INSTALLATION INSTRUCTIONS
(continued)

3 ROUTE THE COPPER TUBING BETWEEN THE COLD WATER LINE AND THE REFRIGERATOR.

Route the tubing through a hole drilled in the floor or wall (behind the refrigerator or adjacent base cabinet) as close to the wall as possible. Be sure there is sufficient extra tubing (about 8 feet [244 cm] coiled into 3 turns of about 10″ [25 cm] diameter) to allow the refrigerator to move out from the wall after installation.

4 CONNECT THE COPPER TUBING TO THE SHUTOFF VALVE.

Place the compression nut and ferrule (sleeve) onto the end of the tubing and connect it to the shutoff valve. Make sure the tubing is fully inserted into the valve. Tighten the compression nut securely.

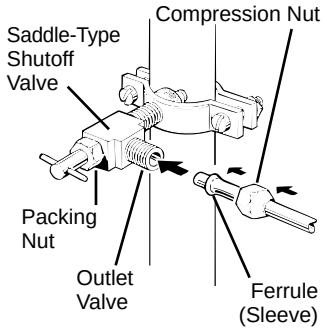

5 TURN ON THE WATER AND FLUSH OUT THE TUBING.

a. Turn the main water supply on and flush out the tubing until the water is clear.

b. Shut the water off at the water valve after about one quart of water has been flushed through the tubing.

6 CONNECT THE COPPER TUBING TO THE REFRIGERATOR.

Before making the connection to the refrigerator, be sure the refrigerator power cord is not plugged into the wall outlet.

We recommend installing a water filter (available at Service and Parts Centers) if your water supply has sand or particles that could clog the screen of the refrigerator's water valve. Install it in the water line near the refrigerator.

a. Remove the plastic flexible cap from the water valve.

b. Place the compression nut and ferrule (sleeve) onto the end of the tubing as shown.

c. Insert the end of the copper tubing into the water valve connection as far as possible. While holding the tubing, tighten the fitting.

d. Fasten the copper tubing into the clamp provided to hold it in a vertical position. You may need to pry open the clamp.

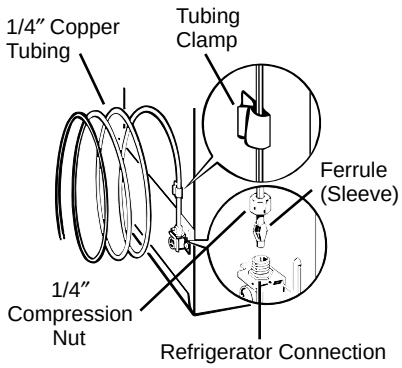

7 TURN THE WATER ON AT THE SHUTOFF VALVE.

Tighten any connections that leak.

8 PLUG THE REFRIGERATOR POWER CORD INTO A GROUNDED ELECTRICAL OUTLET.

9 SET THE ICEMAKER FEELER ARM TO THE ON (DOWN) POSITION.

The icemaker will not begin to operate until it reaches its operating temperature of 15°F. (-9°C.) or below. It will then begin operation automatically if the icemaker is in the ON (down) position.

NOTE: The icemaker may double-cycle when it first starts, causing some water spillage from the icemaker into the ice bucket. This is normal and should not happen again. The first few batches of cubes should be thrown away, so that remaining impurities in the water line will be flushed out.

10 MOVE THE REFRIGERATOR BACK TO THE WALL.

Arrange the coil of copper tubing so that it does not vibrate against the back of the refrigerator or against the wall.

REVERSING THE DOOR SWING

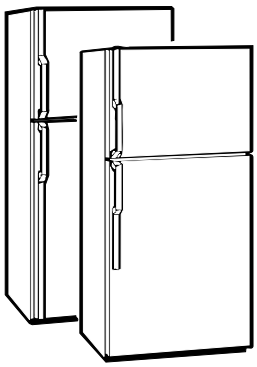

NOTE: DOORS ON DISPENSER MODELS DO NOT REVERSE.

When reversing the door swing:

- Read the instructions all the way through before starting.
- Handle parts carefully to avoid scratching paint.
- Set screws down by their related parts to avoid using them in the wrong places.
- Provide a non-scratching work surface for the doors.

IMPORTANT: Once you begin, do not move cabinet until door-swing reversal is completed.

These instructions are for changing the hinges from the right side to the left side.

If you ever want to change the hinges back to the right side, follow these same instructions (merely reverse all references to left and right).

TOOLS REQUIRED

- Phillips screwdriver
- Masking tape
- T20 or T25 Torxdriver, whichever your model requires
- Putty knife or thin-blade screwdriver
- 3/8″ socket and ratchet (a 6-point socket is recommended)

TO REMOVE THE DOORS

1 GENERAL

a. Unplug the refrigerator from its electrical outlet.

b. Empty all door shelves, including the dairy compartment.

CAUTION: Do not let either door drop to the floor. To do so could damage the door stop.

2 REMOVE FREEZER DOOR.

a. Tape the door shut with masking tape.

b. With a Phillips screwdriver, remove the hinge cover (on some models). With a Torxdriver, remove 2 Torx screws that hold the top hinge to the cabinet.

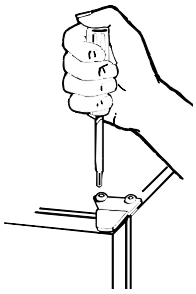

c. Lift the hinge straight up to free the hinge pin from the socket in the top of the door.

d. Remove tape, tilt the door away from the cabinet and lift it to free its bottom socket from the hinge pin on the center hinge bracket.

e. Set the door on a non-scratching surface with the outside up.

3 REMOVE FRESH FOOD DOOR.

a. Tape the door shut with masking tape.

b. Remove the hinge pin with a 3/8″ socket and ratchet.

c. Remove tape and tilt the door away from the cabinet. Remove and save the washer on the hinge pin.

d. Lift the door straight up to free its bottom socket from the pin in the bottom hinge bracket.

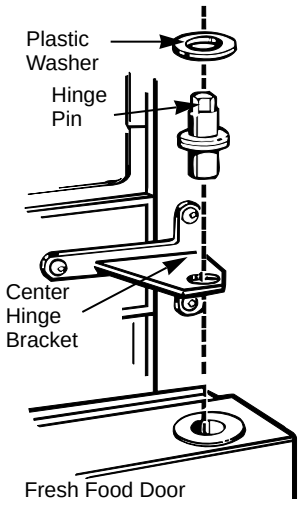

(continued next page)

REVERSING THE DOOR SWING
(continued)

TO REVERSE HARDWARE ON CABINET

1 TRANSFER BOTTOM HINGE BRACKET TO THE LEFT.

a. Remove the base grille. Grasp it at the bottom and pull it straight out.

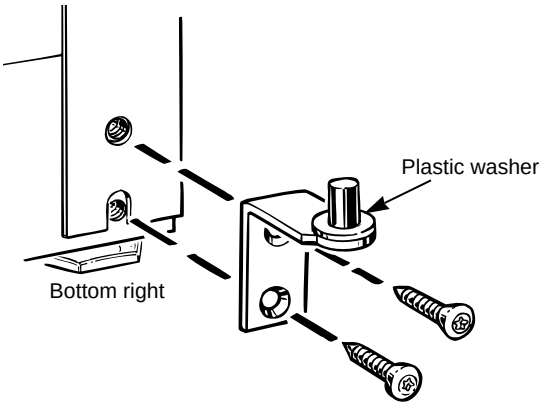

b. Using a Torxdriver, remove the hinge bracket and plastic washer from the bottom right side of the cabinet.

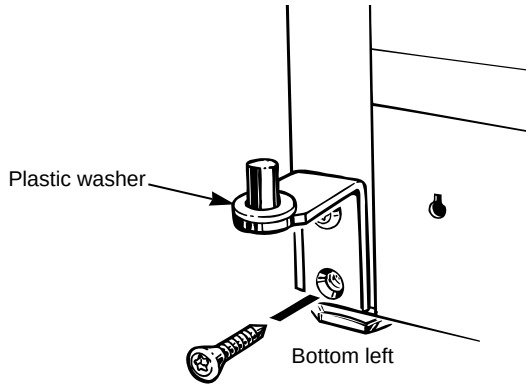

c. Reinstall the hinge bracket and plastic washer to the bottom left side of the cabinet.

2 TRANSFER CENTER HINGE BRACKET TO THE LEFT.

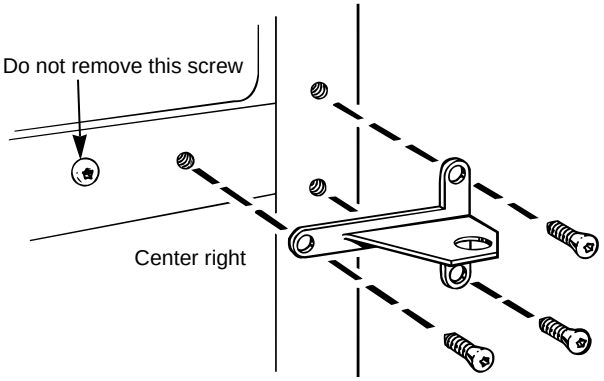

a. Remove the center hinge bracket by removing the three Torx screws. **NOTE: Keep these screws with the hinge bracket. They are longer screws and will be used when installing the hinge on the other side.**

b. Remove the three Torx screws from the **center left** side of the cabinet. Screw them into the holes on the right side, which were uncovered in Step (a) above.

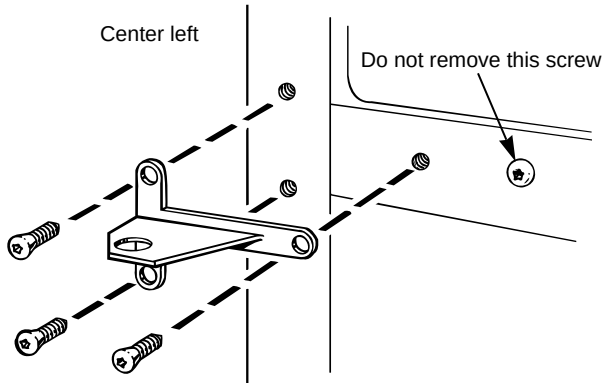

Place the center hinge bracket over the holes at the center left side of the cabinet, insert the three screws that were removed with the center hinge bracket in Step (a) and tighten them.

3 TRANSFER TOP HINGE TO THE LEFT.

Interchange hinge and screws at top right with screws at top left of cabinet. **Do not tighten screws on hinge side at this time.**

4 TRANSFER DOOR STOPS.

a. On each door, move the metal door stop from the right end to the left end.

b. Move any screws from the left end to the right end.

TO REVERSE DOOR HANDLES

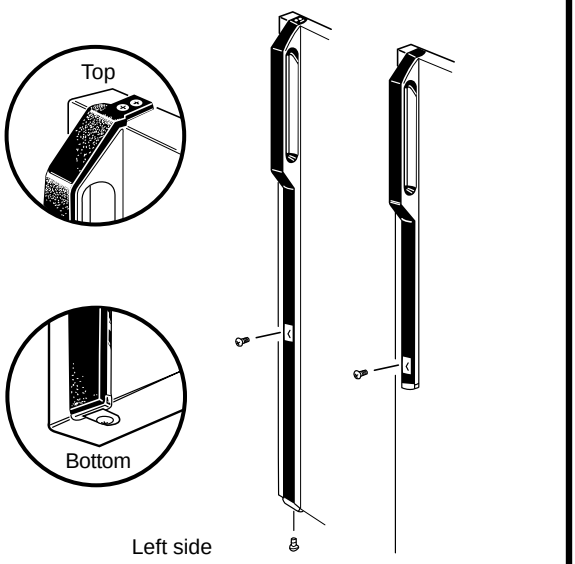

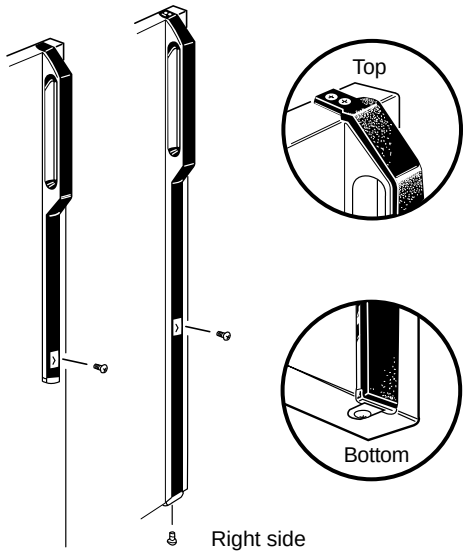

1 TRANSFER FRESH FOOD DOOR HANDLE TO THE RIGHT.

To remove handle…

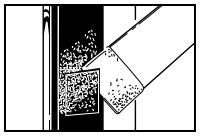

• Remove handle plug using putty knife under edge, and remove screw underneath.

• Remove two screws holding handle to top of door and, if refrigerator has a long handle, remove screw holding handle to bottom of door.

• Remove handle.

After removing handle…

• Remove screws from right edge of door top and insert them into handle screw holes on left side.

• Remove plug button from left edge of door and insert it into hole on opposite side.

• Transfer medallion on door to opposite side.

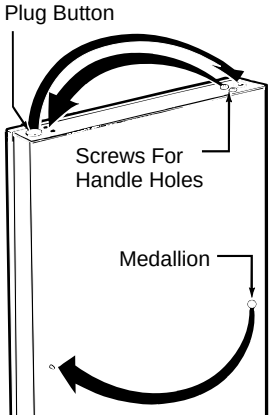

When reinstalling handle…

• Attach handle to right side of door with screws at top, under handle plug, and, if refrigerator has a long handle, with screw at bottom of door.

2 TRANSFER FREEZER DOOR HANDLE TO THE RIGHT.

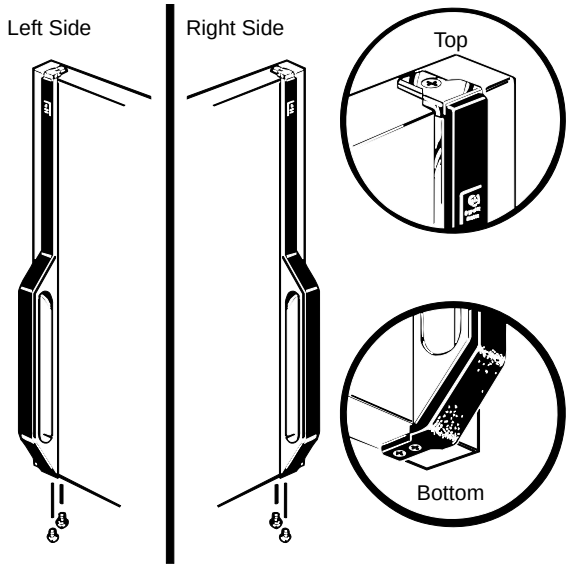

• Remove one screw holding handle to top of door and two screws holding handle to bottom of door.

• Remove handle.

• Remove screws from right edge of door and insert them into handle screw holes on left side.

• Attach handle to right edge of door with screws at top and bottom, using holes closest to edge of door.

(continued next page)

REVERSING THE DOOR SWING
(continued)

TO REHANG FRESH FOOD DOOR

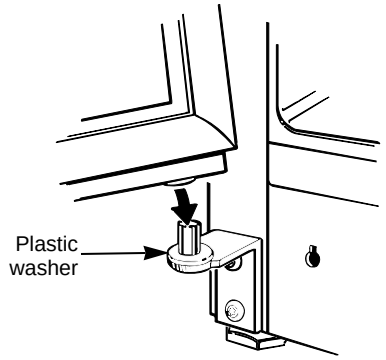

a. Lower bottom socket of fresh food door onto pin on bottom hinge bracket. Be sure washer is in place.

b. Tilt door toward cabinet and gently push door under center hinge bracket and align with the hole in the center hinge bracket.

c. Reinstall hinge pin with a 3/8″ socket and ratchet so it extends through hole in center hinge bracket and into socket on top of fresh food door.

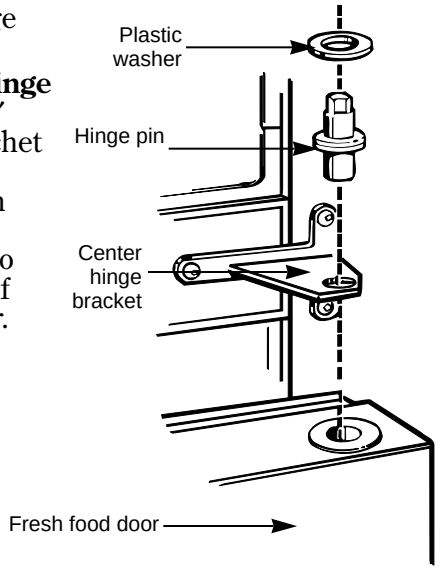

TO REHANG FREEZER DOOR

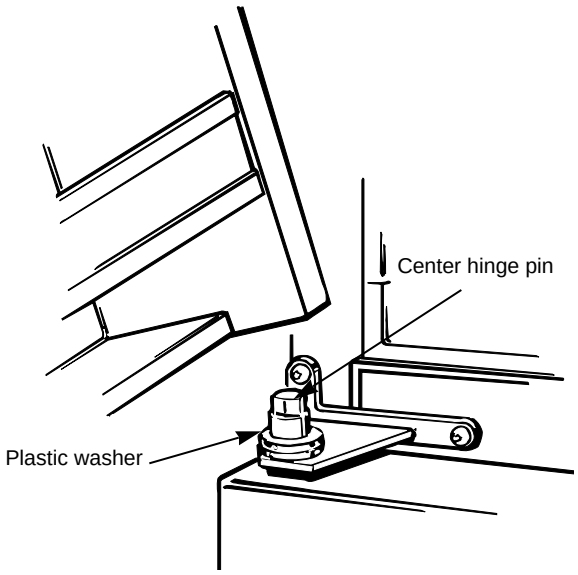

a. Lower bottom socket of freezer door onto center hinge pin. Be sure washer is in place.

b. Tilt door toward cabinet, lifting the top hinge so the pin fits into the socket on top of the door.

c. Tighten the top hinge screws after supporting the door on the handle side and aligning so the gap between the doors is even all across the front.

NORMAL OPERATING SOUNDS

These sounds are normal and are due mostly to high efficient operation.

Icemaker
(on some models)
Occasionally you will hear ice cubes dropping into the ice bin.

Cold Control & Defrost Timer
These parts can produce a snapping sound when turning the refrigerator on or off. The timer also produces a sound similar to an electric clock.

Plastic Liner
Cracking or popping sounds due to expansion of the plastic liner.

Condenser Fan
You may hear air being forced over the condenser by the fan.

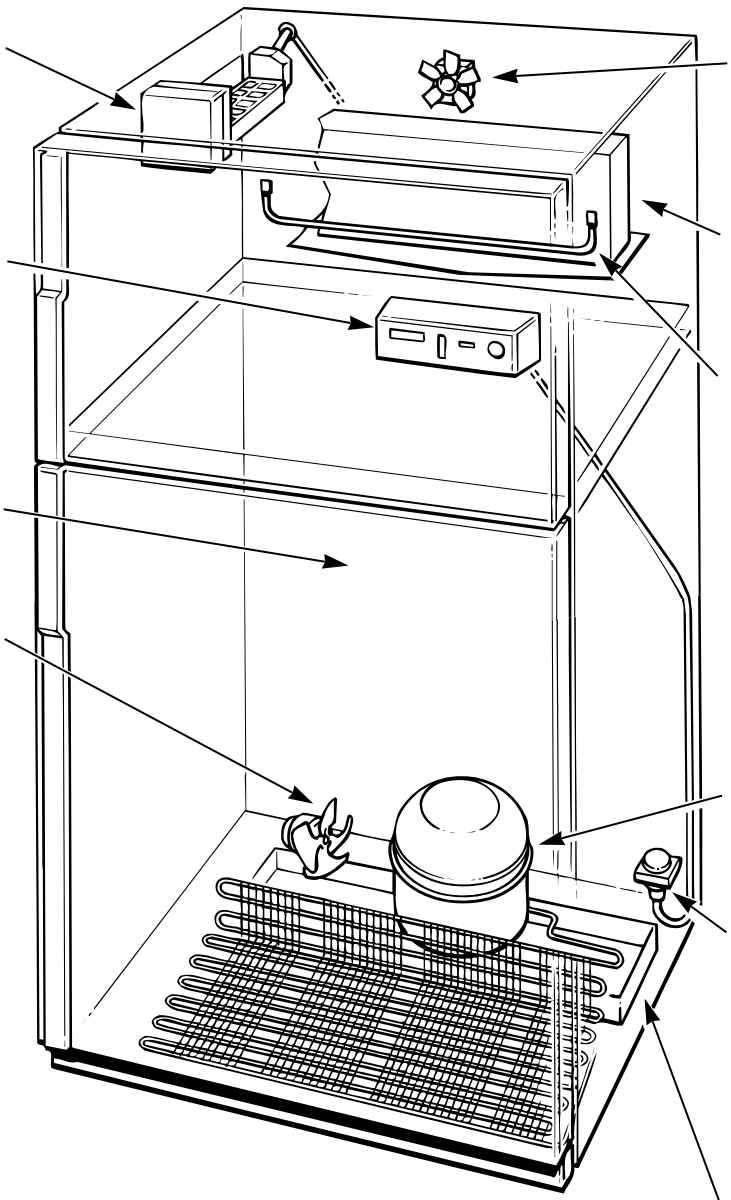

Evaporator Fan
You may hear air being forced through the cabinet by the fan.

Evaporator
The flow of refrigerant through the evaporator may create a boiling or gurgling sound.

Defrost Heater
During defrost cycles, water dripping onto the heater may cause a hissing or sizzling sound. After defrosting, a popping sound may occur and the evaporator may create a boiling or gurgling sound.

Compressor
Modern, high efficiency compressors operate much faster than older models. The compressor may have a high pitched hum or pulsating sound.

Water Valve
(on models equipped with an automatic icemaker)
When the icemaker fills with water, a buzzing sound and running water will be heard.

Water Pan
Water may be heard running into the drain pan during defrost cycle.

Depending on the placement of the refrigerator in your kitchen, you may want to place a piece of rubber backed carpet under the refrigerator to reduce the noise.

QUESTIONS?
USE THIS PROBLEM SOLVER

PROBLEM	POSSIBLE CAUSE
REFRIGERATOR DOES NOT OPERATE	• May be in defrost cycle when motor does not operate for about 30 minutes. • Temperature control in OFF position. • If interior light is not on, refrigerator may not be plugged in at wall outlet. • If plug is secure and the refrigerator still fails to operate, plug a lamp or a small appliance into the same outlet to determine if there is a tripped circuit breaker or burned out fuse.
MOTOR OPERATES FOR LONG PERIODS	• Modern refrigerators with more storage space and a larger freezer compartment require more operating time. • Normal when refrigerator is first delivered to your home—usually requires 24 hours to completely cool down. • Large amounts of food placed in refrigerator to be cooled or frozen. • Hot weather—frequent door openings. • Door left open. • Temperature controls are set too cold. Refer to the Temperature Control section. • Grille and condenser need cleaning. Refer to Care and Cleaning section.
MOTOR STARTS & STOPS FREQUENTLY	• Temperature control starts and stops motor to maintain even temperatures.
VIBRATION OR RATTLING	• If refrigerator vibrates, more than likely it is not resting solidly on the floor and front roller screws or front leveling legs need adjusting, or floor is weak or uneven. Refer to Rollers section. • If dishes vibrate on shelves, try moving them. Slight vibration is normal.
FOODS DRY OUT	• Foods not covered, wrapped or sealed properly.
FRESH FOOD OR FREEZER COMPARTMENT TEMPERATURE TOO WARM	• Temperature control not set cold enough. Refer to Temperature Control section. • Warm weather—frequent door openings. • Door left open for too long a time or package holding door open or blocking air duct in freezer compartment.
FROST OR ICE CRYSTALS ON FROZEN FOOD	• Door may have been left ajar or package holding door open. • Too frequent or too long door openings. • Frost within package is normal.
AUTOMATIC ICEMAKER DOES NOT WORK (on some models)	• Icemaker feeler arm is in STOP (up) position. • Water supply turned off or not connected. • Freezer compartment too warm. • Piled up cubes in the storage bin may cause icemaker to shut off prematurely. Remove storage bin from freezer and level cubes by hand.
CUBES TOO SMALL	• Water shutoff valve connecting refrigerator to home water line may be clogged.
SLOW ICE CUBE FREEZING	• Door may have been left ajar. • Turn temperature control to colder setting.
ICE CUBES HAVE ODOR/TASTE	• Ice storage bin needs to be emptied, washed and old cubes need to be discarded. • Unsealed packages in refrigerator and/or freezer compartments may be transmitting odor/taste to ice cubes. • Interior of refrigerator needs cleaning. Refer to Care and Cleaning section.

PROBLEM	POSSIBLE CAUSE
MOISTURE FORMS ON CABINET SURFACE BETWEEN THE DOORS	• Not unusual during periods of high humidity. To help prevent rust, wipe surface dry and make sure the power saver switch is not set at the POWER SAVER setting. • Move the power saver switch to the moisture setting.
MOISTURE COLLECTS INSIDE	• Too frequent or too long door openings. • In humid weather, air carries moisture into refrigerator when doors are opened.
REFRIGERATOR HAS ODOR	• Foods with strong odors should be tightly covered. • Check for spoiled food. • Interior needs cleaning. Refer to Care and Cleaning section. • Defrost water drainage system needs cleaning. • Keep open box of baking soda in refrigerator; replace every three months.
HOT AIR FROM BOTTOM OF REFRIGERATOR	• Normal air flow cooling motor. In the refrigeration process, it is normal that heat be expelled in the area under the refrigerator. Some floor coverings will discolor at these normal and safe operating temperatures. Your floor covering supplier should be consulted if you object to this discoloration.
FOOD FREEZING IN THE REFRIGERATOR	• Move the food away from the air vent (near the controls). • Turn down the fresh food control.
ORANGE GLOW IN THE FREEZER	• An orange glow is sometimes seen in the freezer when the defrost heater is on. This is normal.
DOOR DOES NOT CLOSE BY ITSELF	• Front rollers or legs need adjusting. See Rollers section.

IF YOU NEED SERVICE

To obtain service, see the Consumer Services page.

We're proud of our service and want you to be pleased. If for some reason you are not happy with the service you receive, here are three steps to follow for further help.

For Customers in the United States:

FIRST, contact the people who serviced your appliance. Explain why you are not pleased. In most cases this will solve the problem.

NEXT, if you are still not pleased, write all the details—including your phone number—to:

Manager, Consumer Relations
GE Appliances
Appliance Park
Louisville, KY 40225

FINALLY, if your problem is still not resolved, write:

Major Appliance Consumer Action Program
20 North Wacker Drive
Chicago, IL 60606

For Customers in Canada:

FIRST, contact the people who serviced your appliance. Explain why you are not pleased. In most cases this will solve the problem.

NEXT, if you are still not pleased, write all the details—including your phone number—to:

Manager, Consumer Relations
2645 Skymark Ave.,
Mississauga, Ontario
Canada L4W 4H2

NOTES

CONSUMER WARRANTY

(for customers in Canada)

FIRST YEAR

CAMCO warrants the replacement or repair of all parts of this Refrigerator which prove to be defective in material or workmanship, for one year from the date of purchase. Such parts will be repaired or replaced at the option of Camco without charge, subject to the terms and conditions set out below.

The DEALER warrants to provide the service labor for the repair or replacement of all parts of this Refrigerator which prove to be defective in material or workmanship for one year from the date of purchase.

NEXT FOUR YEARS

CAMCO warrants the hermetically sealed refrigerator system (namely: Evaporator, Condenser, Motor Compressor, Interconnecting Tubing, Drier and Refrigerant Charge) against defects in material or workmanship for an additional four years. These parts will be repaired or replaced at the option of Camco without charge, subject to the terms and conditions set out below.

The DEALER warrants for the next four years to provide the service labor necessary to repair or replace the hermetically sealed refrigeration system, subject to the terms and conditions set out below.

TERMS AND CONDITIONS

1. This warranty applies only to single family domestic use in Canada when the Refrigerator has been properly installed according to the instructions supplied by Camco and is connected to an adequate and proper utility service. Damage due to abuse, accident, commercial use, and alteration or the removal or defacing of the serial plate, cancels all obligations of this warranty. Service during this warranty must be performed by an Authorized Camco Service Agent.

2. Neither Camco nor the Dealer is liable for any claims or damages resulting from any failure of the Refrigerator or from service delays beyond their reasonable control.

3. To obtain warranty service, purchaser must present the original bill of sale. Components repaired or replaced are warranted through the remainder of the original warranty period only.

4. This warranty does not cover expense involved in making this appliance readily accessible for servicing.

5. This warranty gives you specific legal rights. Additional warranty rights may be provided by law in some areas.

Camco Service is available coast-to-coast. See Consumer Services section for service information.

If further help is needed concerning this Warranty, contact:
Manager, Consumer Relations
Camco Inc., Consumer Service
2645 Skymark Avenue,
Mississauga, Ontario
L4W 4H2

Top-Mount No-Frost
Models 18, 19, 21, 22, 24 and 25

YOUR GENERAL ELECTRIC REFRIGERATOR

WARRANTY

(for customers in the United States)

Staple sales slip or cancelled check here. Proof of original purchase date is needed to obtain service under warranty.

WHAT IS COVERED

FULL ONE-YEAR WARRANTY

For one year from date of original purchase, we will provide, free of charge, parts and service labor in your home to repair or replace ***any part of the refrigerator*** that fails because of a manufacturing defect.

FULL FIVE-YEAR WARRANTY

For five years from date of original purchase, we will provide, free of charge, parts and service labor in your home to repair or replace **any part of the sealed refrigerating system** (the compressor, condenser, evaporator and all connecting tubing) that fails because of a manufacturing defect.

LIMITED LIFETIME WARRANTY

For the life of the refrigerator, we will replace, free of charge, ***any see-through pan or drawer made from Lexan® polycarbonate resin*** and furnished with the refrigerator if the pan or drawer breaks during normal household use. Drawer covers are not included. The drawers can be exchanged at a GE Service and Parts Center, or by writing to the address below.

****

This warranty is extended to the original purchaser and any succeeding owner for products purchased for ordinary home use in the 48 mainland states, Hawaii and Washington, D.C. In Alaska the warranty is the same except that it is LIMITED because you must pay to ship the product to the service shop or for the service technician's travel costs to your home.

All warranty service will be provided by our Factory Service Centers or by our Authorized Customer Care® servicers during normal working hours.

Should your appliance need service, during warranty period or beyond, call 800-GE-CARES (800-432-2737).

WHAT IS NOT COVERED

- Service trips to your home to teach you how to use the product.

  Read your Use and Care material. If you then have any questions about operating the product, please contact your dealer or our Consumer Affairs office at the address below, or call, toll free:

  GE Answer Center®
  800.626.2000
  consumer information service

- Improper installation.

  If you have an installation problem, contact your dealer or installer. You are responsible for providing adequate electrical, plumbing and other connecting facilities.

- Replacement of house fuses or resetting of circuit breakers.
- Failure of the product if it is used for other than its intended purpose or used commercially.
- Damage to product caused by accident, fire, floods or acts of God.
- Loss of food due to spoilage.

WARRANTOR IS *NOT* RESPONSIBLE FOR CONSEQUENTIAL DAMAGES.

Some states do not allow the exclusion or limitation of incidental or consequential damages, so the above limitation or exclusion may not apply to you. This warranty gives you specific legal rights, and you may also have other rights which vary from state to state. To know what your legal rights are in your state, consult your local or state consumer affairs office or your state's Attorney General.

Warrantor: General Electric Company
If further help is needed concerning this warranty, write:
Manager—Consumer Affairs, Appliance Park, Louisville, KY 40225

This book is printed on recycled paper.

Part No. 162D3948P002
Pub. No. 49-6803

12-95 CG

Top-Mount No-Frost
Models 18, 19, 21, 22, 24 and 25

Printed in the United States