Use and Care & Installation Guide

Air Conditioner

Contents

Adapter Plug	3	Model and Serial Numbers	2
Air Direction	5	Problem Solver	7
Appliance Registration	2	Safety Instructions	2
Care and Cleaning	6	User Maintenance Instructions	6
Air Filter	6	Warranty	Back Cover
Condenser Coils	6		
Grille & Cabinet	6		
Consumer Services	15		
Control Settings	4		
Electrical Requirements	3		
Energy-Saving Tips	7		
Extension Cords	3		
Grounding	3	GE Answer Center® 800.626.2000	
Installation Instructions	8-11		

Models AVX06
AVX08
AVX10

GE Appliances

Help us help you...

Before using your air conditioner, read this book carefully.

It is intended to help you operate and maintain your new air conditioner properly.

Keep it handy for answers to your questions.

If you don't understand something or need more help, write (include your phone number):

Consumer Affairs
GE Appliances
Appliance Park
Louisville, KY 40225

Write down the model and serial numbers.

You'll find them on a label behind the air discharge grille on the top panel above the controls.

These numbers are also on the Consumer Product Ownership Registration Card that came with your air conditioner. Before sending in this card, please write these numbers here:

Model Number

Serial Number

Use these numbers in any correspondence or service calls concerning your air conditioner.

If you received a damaged air conditioner . . .

Immediately contact the dealer (or builder) that sold it to you.

Save time and money. Before you request service . . .

Check the Problem Solver on page 7. It lists causes of minor operating problems that you can correct yourself.

Important Safety Instructions

Read all instructions before using this appliance.

When using this appliance, always exercise basic safety precautions, including the following:

- **Use this appliance only for its intended purpose** as described in this Use and Care Book.
- **This air conditioner must be properly installed in accordance with the Installation instructions before it is used.** See grounding instructions on page 3.
- **Never unplug your air conditioner by pulling on the power cord.** Always grip plug firmly and pull straight out from the receptacle.
- **Repair or replace immediately all electric service cords that have become frayed or otherwise damaged.** Do not use a cord that shows cracks or abrasion damage along its length or at either the plug or connector end.
- **Unplug your air conditioner before making any repairs.** Note: We strongly recommend that any servicing be performed by a qualified individual.
- **For your safety. ..do** not store or use combustible materials, gasoline or other flammable vapors or liquids in the vicinity of this or any other appliance.

SAVE THESE INSTRUCTIONS

If you need service

To obtain service, see the Consumer Services page in the back of this book.

We're proud of our service and want you to be pleased. If for some reason you are not happy with the service you receive, here are three steps to follow for further help.

FIRST, contact the people who serviced your appliance. Explain why you are not pleased. In most cases, this will solve the problem.

NEXT, if you are still not pleased, write all the details-including your phone number—to:

Manager, Consumer Relations
GE Appliances
Appliance Park
Louisville, Kentucky 40225

FINALLY, if your problem is still not resolved, write:

Major Appliance Consumer Action Panel
20 North Wacker Drive
Chicago, Illinois 60606

Electrical Safety—IMPORTANT... Please Read Carefully.

How to connect electricity

For personal safety, this appliance must be properly grounded.

Electrical requirement

115-volt models require a 115/120-volt a.c., 60 hz grounded outlet protected with a 15 amp time delay fuse or circuit breaker.

The power cord on these models has a three-prong (grounding) plug that mates with a standard three-prong (grounding) wall outlet (Fig. 1) to minimize the possibility of electric shock hazard from these appliances.

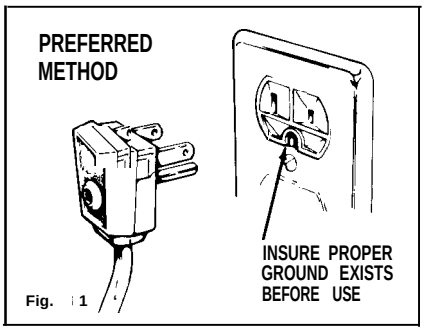

Fig. 1

Where a standard two-prong wall outlet is encountered, it is your personal responsibility and obligation to have it replaced with a properly grounded three-prong wall outlet.

DO NOT, UNDER ANY CIRCUMSTANCES, CUT OR REMOVE THE THIRD (GROUND) PRONG FROM THE POWER CORD.

230/208-volt models require their own single branch circuit supplying 230/208-volt a.c., protected with a time delay fuse or circuit breaker. This is recommended for best performance and to prevent overloading house wiring circuits, which could cause a possible fire hazard from overheating wires.

The power cord on these models has a 230/208-volt perpendicular, tandem or large tandem type plug that mates respectively with a 230/208-volt perpendicular, tandem or large tandem type wall outlet. These types of outlets are available at most hardware stores.

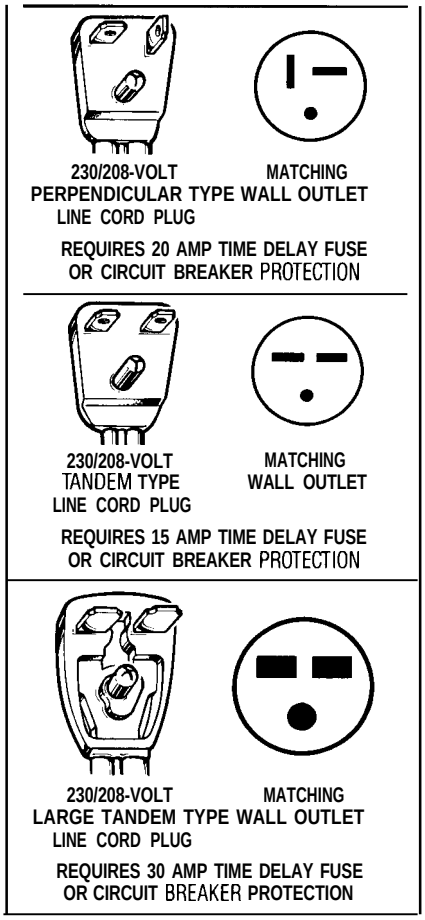

Whether your air conditioner is a 115-volt or a 230/208-volt unit, it is important to have the wall outlet and circuit checked by a qualified electrician if there is any doubt as to whether a proper ground exists.

Use of adapter plug (W-volt models only)

Because of potential safety hazards under certain conditions, we **strongly recommend against use of an adapter plug.** However, if you still elect to use an adapter, where local codes permit, a TEMPORARY CONNECTION may be made to a properly grounded two-prong wall outlet by use of a UL listed adapter (Fig. 2) available at most local hardware stores.

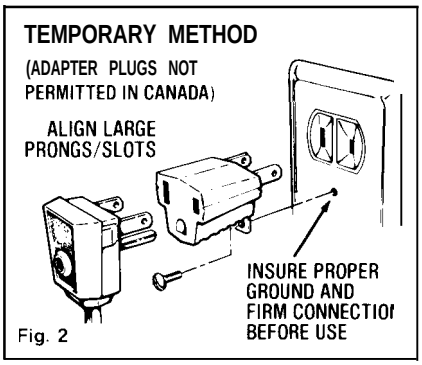

Fig. 2

The larger slot in the adapter must be aligned with the larger slot in the wall outlet to provide proper polarity in the connection of the power cord.

CAUTION: Attaching the adapter ground terminal to wall outlet cover screw does not ground the appliance unless cover screw is metal, and not insulated, and wall outlet is grounded through house wiring. You should have the circuit checked by a qualified electrician to make sure the outlet is properly grounded.

When disconnecting the power cord from the adapter, always hold the adapter with one hand. If this is not done, the adapter ground terminal is very likely to break with repeated use.

Should the adapter ground terminal break, DO NOT USE the appliance until a proper ground has again been established.

Use of extension cords

Because of potential safety hazards under certain conditions, we **strongly recommend against the use of an extension cord.** However, if you still elect to use an extension cord, it is absolutely necessary that it be a UL listed 3-wire grounding type appliance extension cord and that the current carrying rating of the cord in amperes be equal to or greater than the branch circuit size shown on the rating nameplate of the appliance.

Operating Your&r Conditioner Controls

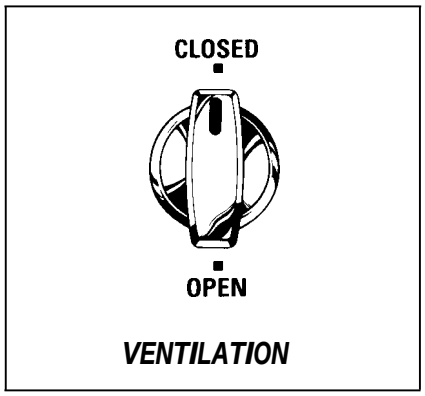

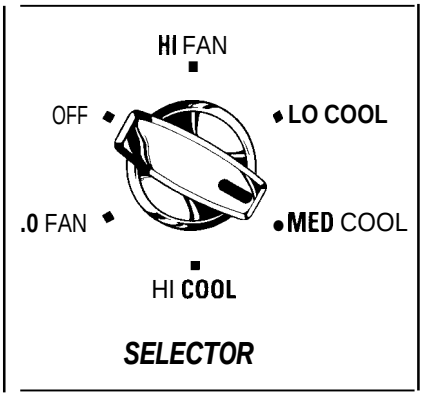

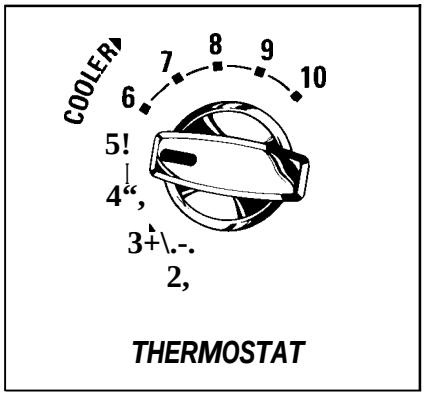

Ventilation Control

When you turn the Ventilation Control to CLOSED, the vent door is closed and only the air inside the room can be circulated and conditioned. Turning the control to OPEN opens the vent door, allowing a small amount of indoor air to be exhausted from the room.

Selector Switch

OFF turns air conditioner off.

LO FAN provides low fan speed operation without cooling.

HI FAN provides high fan speed operation without cooling.

LO COOL provides cooling with low fan speed operation.

MED COOL provides cooling with medium fan speed operation.

HI COOL provides cooling with high fan speed operation.

Thermostat Control

When you turn the Thermostat Control to the desired setting, it will automatically control the temperature of the indoor air. The higher the number selected, the cooler the indoor air will be.

For normal cooling

1. Set the Selector Switch at HI COOL.

2. Set the Thermostat Control at the desired number (usually 4-6 is a good starting position). If room temperature is not satisfactory after a reasonable time, set the Thermostat Control at a higher number for a cooler room or at a lower number for a warmer room.

3. Be sure the Ventilation Control is in the CLOSED position.

For maximum cooling

1. Set the Selector Switch at HI COOL.

2. Turn the Thermostat Control to 10.

3. Be sure the Ventilation Control is in the CLOSED position.

For quieter operation

1. Set the Selector Switch at the LO COOL position.

2. Turn the Thermostat Control to the desired number.

When the Thermostat Control is set on 9 or 10 and the Fan is set on low speed, moisture may freeze on the coils and prevent the unit from cooling. If this happens, set the Fan at high speed and set the Thermostat Control to a lower number.

3. Be sure the Ventilation Control is in the CLOSED position.

For nighttime operation

During the cooler evening hours, we recommend that you set the Selector Switch at LO COOL for quieter operation and the Thermostat Control at mid-range (5 or 6).

For extreme temperatures

For greatest economy and best performance, we suggest you set the Selector Switch at HI COOL in extremely hot weather.

For ventilation

Whether the controls are set for cooling or fan only operation, setting the Ventilation Control at OPEN lets room air be exhausted to the outside. This is helpful in removing stale air, smoke or odors from the room. However, cooling effectiveness is reduced whenever the vent door is open, so we suggest that you don't keep the Ventilation Control at OPEN for long—especially in hot, humid weather.

To adjust air direction

Side to Side

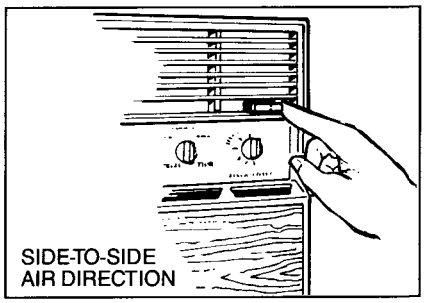

The side-to-side air direction louvers are controlled by tabs that let you position the louvers to discharge air to the left, to the right, or straight ahead.

Up and down (on some models)

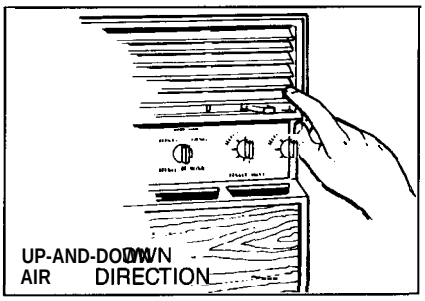

The up-and-down air direction louvers are controlled by fingertip pressure on the louvers. They regulate air discharge upward, downward or straight out.

Care and Cleaning

USER MAINTENANCE INSTRUCTIONS

Turn air conditioner off and remove plug from wall outlet before cleaning.

Grille & Cabinet

Wipe front grille with a clean cloth lightly dampened with mild liquid dishwashing detergent. Wash cabinet with mild soap or detergent and lukewarm water.

Condenser Coils

These coils on the weather side of the unit should be checked periodically and cleaned if clogged with dirt or soot from the atmosphere. If extremely soiled, they may need to be steam cleaned, a service available through your GE service outlet.

front Grille Removal

The front grille can be removed to make the air filter accessible, allow more thorough cleaning or make the model and serial numbers easier to read.

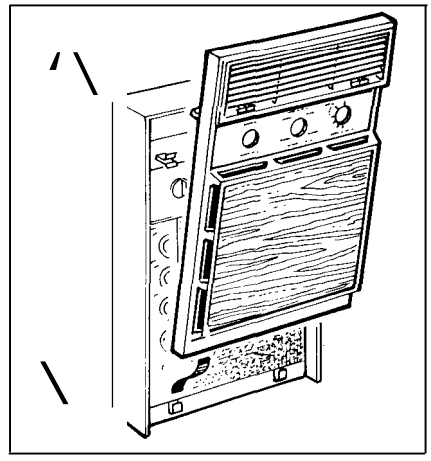

To remove the grille, grasp both sides and pull forward and up to free tabs on grille from clamps on frame and bottom edge of grille from grooved supports on frame.

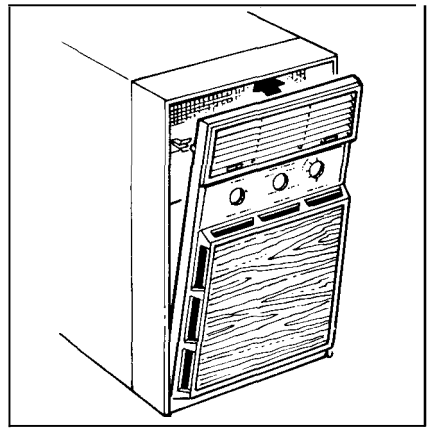

To replace the grille, set bottom edge of grille on grooved supports on frame and push upper part of grille back until tabs on grille snap into clamps on frame.

Air Filter

The air filter behind the front grille should be washed at least every 30 days or as often as it needs cleaning.

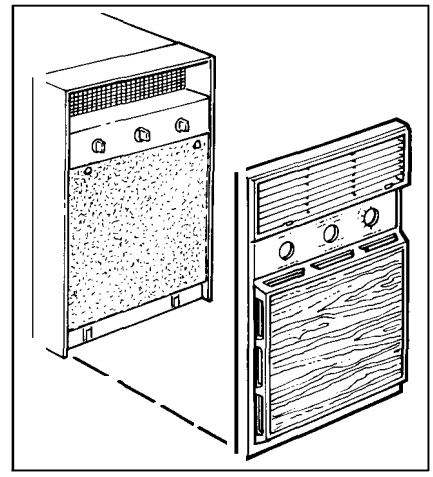

To remove the filter. first remove the front grille, then carefully unhook the filter from the frame.

To clean the filter use a mild household detergent in lukewarm water. Let the filter dry thoroughly before replacing it.

After cleaning the filter, put it back into place and replace the front grille.

Energy-saving tips

- Keep the air filter clean. (See instructions on page 6.)
- For most efficient cooling, keep the Ventilation Control in the closed position except when you want to exhaust air, smoke or odors from the room. See page 4.
- Don't let the room get too hot. Whenever possible, turn the unit on before the room heats up. When heat is "stored up" in walls, furniture, rugs and draperies, your air conditioner takes longer to produce the desired comfort condition.
- Keep windows and doors closed. Cool, dry air escapes when they're open.
- Keep furnace floor registers and cold air returns closed. Cold air can easily escape through them.
- Don't let drapes or furniture block the front of the unit and restrict air flow when it is operating.
- It's best to operate your air conditioner at high speed during extremely hot weather.
- Keep the outdoor condenser coil clean. (See page 6.)
- Turn the air conditioner off before vacations or extended absences from home.



Questions? Use This Problem Solver

PROBLEM	POSSIBLE CAUSE AND REMEDY
AIR CONDITIONER DOES NOT OPERATE	• Not plugged in. Plug may have been bumped loose by vacuum cleaner or furniture. . If plugged in, fuse could have blown or circuit breaker may have tripped.
AIR CONDITIONER "DOES NOT COOL AS IT SHOULD"	• Curtains, blinds or furniture blocking the front of the air conditioner will restrict airflow. • Thermostat Control may not be set high enough. Turn knob to a higher number. Highest setting should provide maximum cooling. • Air filter dirty, should be cleaned at least every 30 days. See instructions on page 6. • Room may have been very hot when air conditioner was first turned on. Allow time for it to cool down. . Cold air may be escaping through open furnace floor registers and cold air returns. • Ventilation Control maybe in the OPEN position, allowing hot outside air to enter the room or cool inside air to leave the room through the open vent door. • Cooling coils have iced up. To melt ice, set the Selector Switch to HI FAN and the Thermostat Control to a lower number.
OPERATING SOUNDS	• Thermostat click, a metallic sound, maybe heard when compressor cycles on and off. This is normal. • Fan runs continuously when Selector Switch is in COOL or FAN position, This is normal.
WATER DRIPPING OUTSIDE	• Excess water may overflow in excessively hot and humid weather. This is normal.
WATER DRIPPING INSIDE	• Air conditioner must be installed level or tilted slightly to the outside for proper water disposal.
WATER IN BASE PAN (ON OUTDOOR SIDE)	• This is normal for a short period in areas with little humidity; normal for a longer period in very humid areas. Moisture removed from indoor air drains to rear of cabinet, where it is picked up by a fan and thrown against the outdoor condenser coil.

If you need more help.. call, toll free:
GE Answer Center"
800.626.2000
consumer information service

INSTALLATION INSTRUCTIONS

BEFORE YOU BEGIN

Read these instructions completely and carefully.

IMPORTANT—Observe all governing codes and ordinances.

INSTALLER—Be sure to leave these instructions with the Consumer.

CONSUMER—Keep these instructions for future reference.

ELECTRICAL REQUIREMENTS

FOR PERSONAL SAFETY:

- **THIS APPLIANCE MUST BE PROPERLY GROUNDED. See page 3.**
- **DO NOT, UNDER ANY CIRCUMSTANCES, CUT OR REMOVE THE THIRD GROUNDING PRONG FROM THE POWER CORD.**
- **WE RECOMMEND THAT YOU DO NOT USE AN EXTENSION CORD OR AN ADAPTER PLUG WITH THIS APPLIANCE.**
- **DO NOT CHANGE THE PLUG ON THE POWER CORD OF THIS APPLIANCE.**
- **FOLLOW NATIONAL ELECTRICAL CODES OR LOCAL CODES AND ORDINANCES.**

115 V 15 AMP circuit "parallel" type	230V/208V 20 AMP circuit "perpendicular" type	230V/208V 15 AMP circuit "tandem" type	230V/208V 30 AMP circuit "tandem" type
	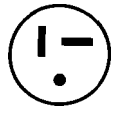		

- If the electric supply provided does not meet the above specifications, call a licensed electrician.
- Aluminum house wiring may pose special problems—consult a qualified electrician.
- This unit requires a separate circuit serving only this appliance.

TOOLS NEEDED

- Screwdriver
- 1/8" drill bit
- Pencil
- Ruler
- Knife
- Drill
- Awl
- Level
- Pliers

WINDOW REQUIREMENTS

Horizontal Sliding Window

- Window opening width 151/z" minimum.
- Vertical opening height of 21" minimum and 36" maximum?

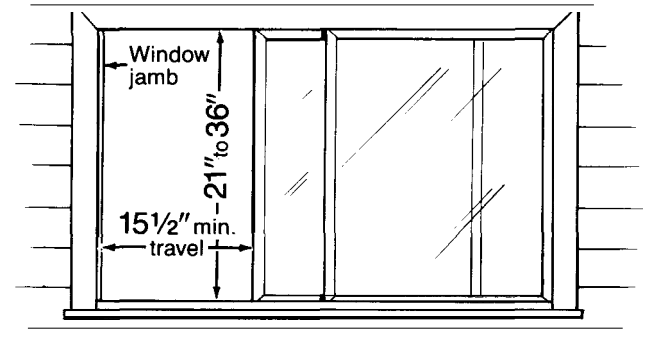

*For installation in an extra high window, order RAK162 kit from your dealer.

Casement Window

- Minimum window opening 15½" wide and 21" high.

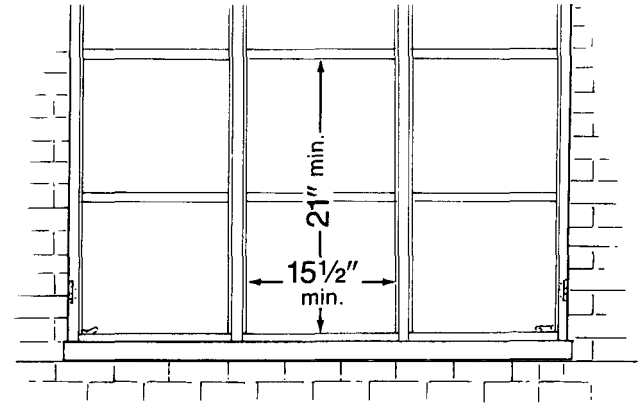

Note: Window frame assembly and side of structure must be adequate to support the weight of the air conditioner.

HORIZONTAL SLIDING WINDOW INSTALLATION

❑ PREPARE WINDOW.

1. Remove one sliding sash from window frame.

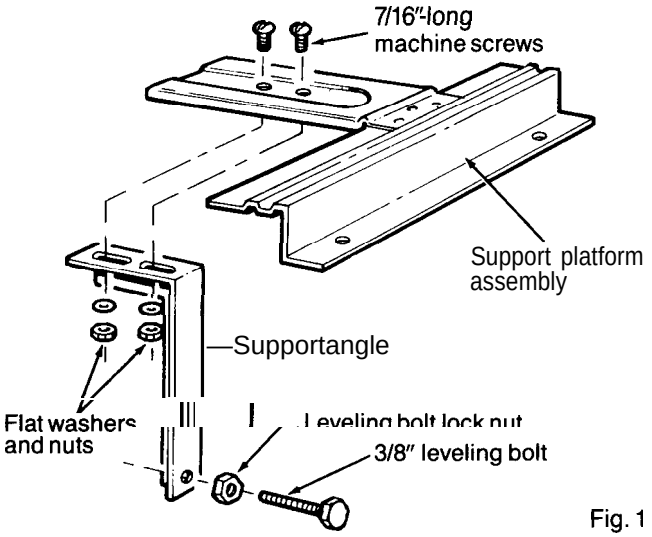

Fig. 1

2. Loosely attach support angle to bottom of support platform assembly using two 7/16″-long machine screws, flat washers and nuts.

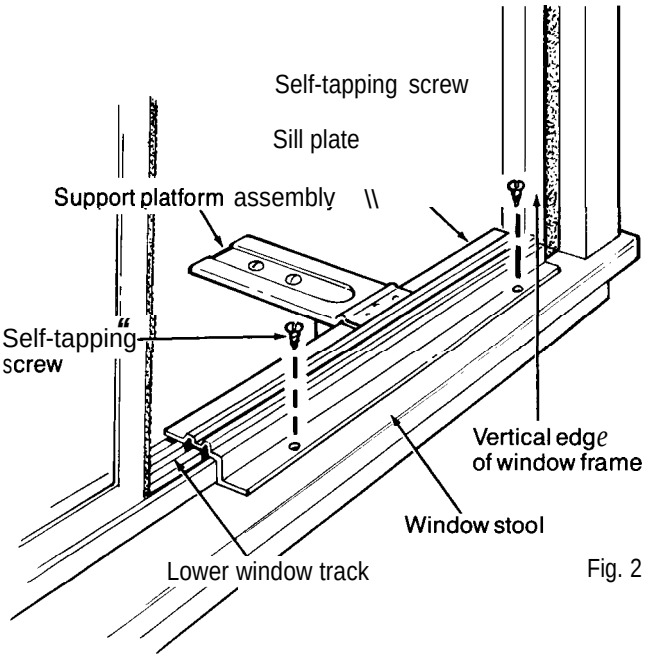

Fig. 2

3. Place support platform assembly against lower window track and firmly against vertical edge of window frame.

4. Attach support platform assembly to window stool using two self-tapping screws.

5. Pull support angle against outside of structure. Tighten two 7/16″-long machine screws on top of support platform assembly (Fig. 1).

6. Adjust 3/8” leveling bolt to position support angle in a level plane (Fig. 1). This will allow for proper angle. Tighten leveling bolt lock nut.

Important: Unit must be tilted toward the outside slightly to facilitate proper condensate disposal.

Caution: Do not drill a hole in bottom pan. Unit is designed to operate with bottom pan approximately half-full of water.

7. Cut two pieces of adhesive-backed foam seal to height of window opening. Remove backing and apply seal to vertical inside edges of window frame and sliding sash that will rest against the unit (Fig. 4, page 10).

8. Replace sliding sash in window frame.

2 INSTALL UNIT IN WINDOW.

1. Slide unit onto support platform assembly. Be sure unit side channel butts against vertical edge of window frame.

If unit side channel does not fit securely, remove the unit and readjust the leveling bolt.

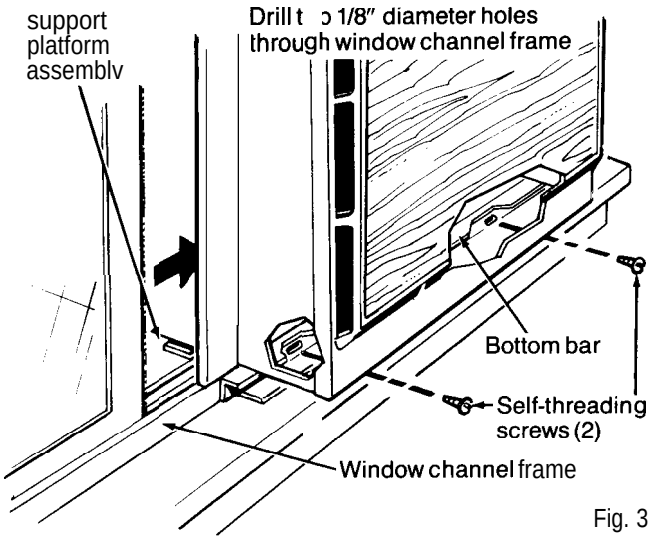

Fig. 3

2. Drill two 1/8” holes through the window channel frame in alignment with existing holes in unit bottom bar. Install two self-threading screws through these holes. Unit should be firmly anchored to window channel frame.

(continued next page)

HORIZONTAL SLIDING WINDOW INSTALLATION (continued)

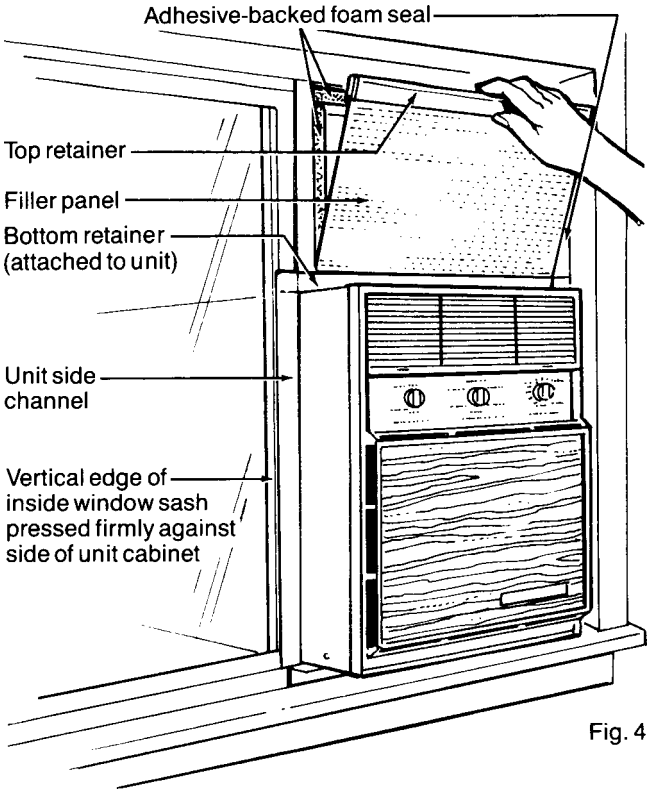

Fig. 4

3. Install sash-stopping speed clips on top and bottom inside edge of window frame (Fig. 5).

4. Cut plastic foam seal (without adhesive back) to proper length and stuff it between the inside window sash and the outside window (Fig. 5).

5. Place top retainer on top edge of filler panel (Fig. 4), then place bottom edge of filler panel into groove of bottom retainer (mounted on unit). Filler panel may be trimmed with knife or scissors to fit window height.

6. Slide right-hand slider upward, making sure filler panel aligns in slider (Fig. 5).

7. With slider up against top retainer, drill 1/8" hole through window frame in alignment with existing hole in slider. Install self-threading screw in hole (Fig. 5).

8. Repeat steps 6 and 7 for left-hand slider (Fig. 5).

9. Check all seals and plug all air leaks around unit with suitable weather-proof sealing compound.

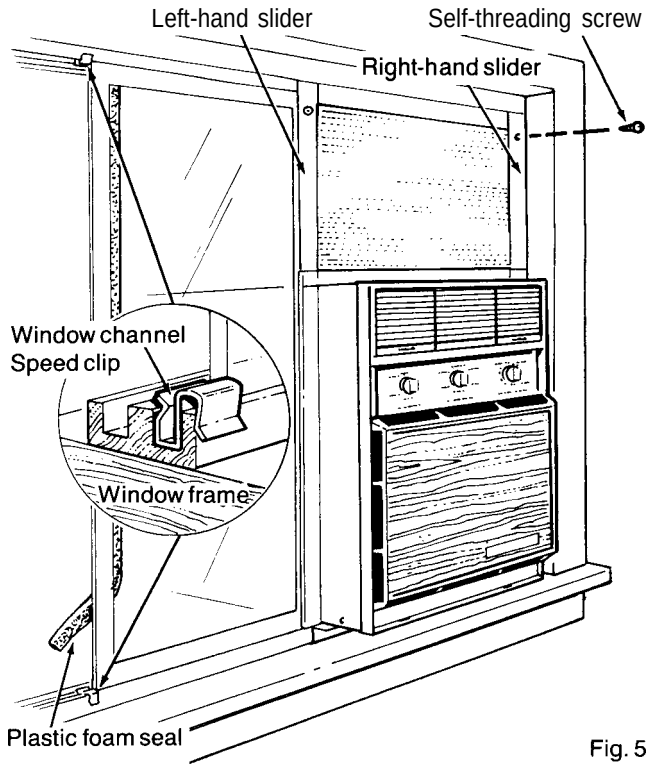

Fig. 5

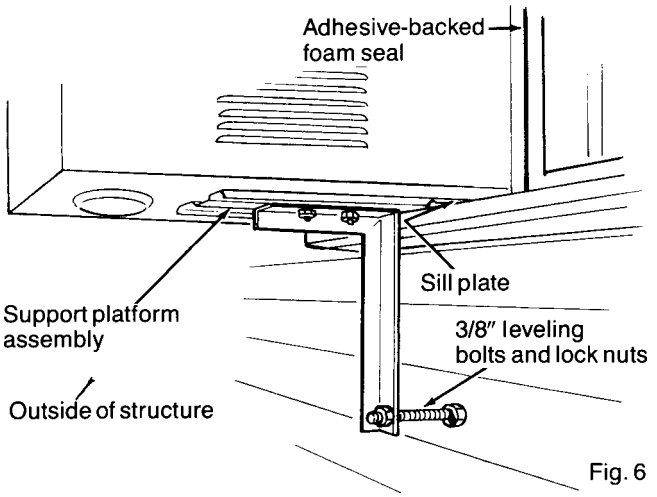

Fig. 6

Typical horizontal sliding window unit shown mounted in place on support platform assembly,

CASEMENT WINDOW INSTALLATION

- **This air conditioner is designed to fit into most casement type windows.**
- As shipped from the factory, unit will fit into a minimum window opening 15½" wide and 21" high.
- Preferred method of installation is through a closed or stationary window.
- Installation in an open window frame is also possible where open window can be removed completely or secured to outside of building.

❑ PREPARE **WINDOW.**

Closed or Stationary Window

1. Plan to install unit in stationary sash to avoid crank handles or window latches.

- If unit is to be installed in or next to a movable sash, it maybe necessary to remove retch, crank handle or both. (Secure window in closed position before removing crank handle.)

2. Remove glass panes and horizontal muntins to a height sufficient to allow you to mount the unit in the window opening.

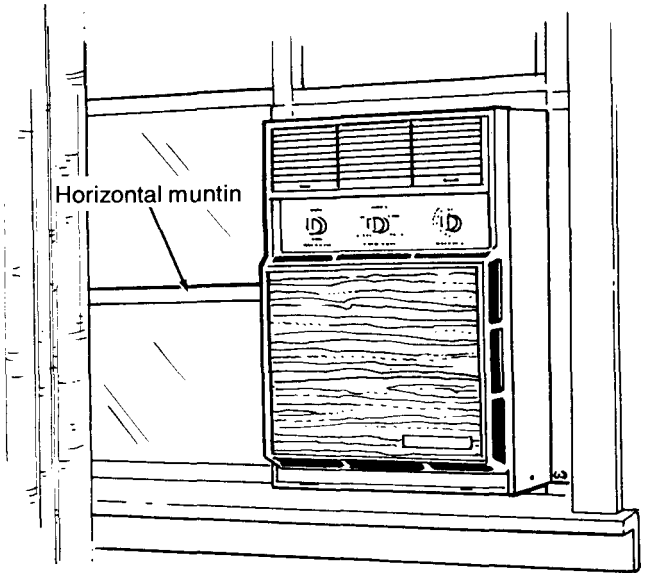

Fig. 7

Unit shown installed in stationary casement window with window panes and horizontal muntin removed.

Open Window Frame

1. Remove crank mechanism and retch handles (Fig. 7).

2. Fold window sash back against outside wall of building and secure it, or remove it completely where possible.

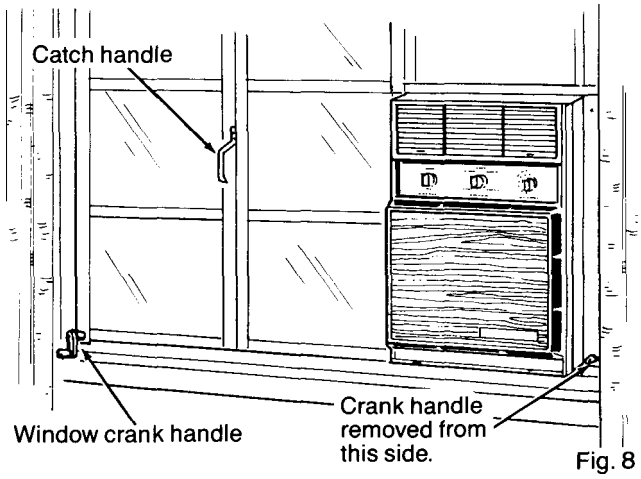

Fig. 8

Unit shown instilled in casement frame. IfPossible, window should be opened fully and secured to side of building structure or removed completely.

A filler panel will be required at side of unit when unit is installed in window openings wider than 151/2". Filler panel should be made from 3/4" -thick wood, be securely anchored, and run full length of window. Paint to suit.

❑ **MOuNT UNIT IN WINDOW.**

Mounting procedure is similar to that described on pages 9 and 10 for sliding window installations.

Caution: Do not block air circulation to outside louvers.

Notes

Notes

Notes

We'll Be There

With the purchase of your new GE appliance, receive the assurance that if you ever need information or assistance from **GE, we'll** be there. All you have to do is cdl—toll-free!



In-Home Repair Service
800-GE-CARES
(800-432-2737)

AGE Consumer Service professional will provide expert repair service, scheduled at a time that's convenient for you. Many GE Consumer Service company-operated locations offer you service today or tomorrow, or at your convenience (7:00 a.m. to 7:00 p.m. weekdays, 9:00 a.m. to 2:00 p.m. Saturdays). Our factory-trained technicians know your appliance inside and out—so most repairs can be handled in just one visit.



Service Contracts
800-626-2224

You can have the secure feeling that GE Consumer Service will still be there after your warranty expires. Purchase a GE contract while your warranty is still in effect and you'll receive a substantial discount. With a multiple-year contract, you're assured of future service at today's prices.





GE Answer Center®
800.626.2000

Whatever your question about any G major appliance, GE Answer Center® information service is available to help. Your call—and your question—will be answered promptly and courteously And you can call any time. GE Answer Center® service is open 24 hours a day, 7 days a week.



Telecommunication Device for the Deaf



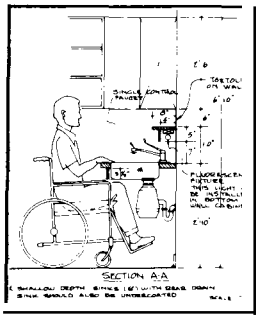

For Customers With Special Needs...
800.626.2000

Upon request, GE will provide Braill controls for a variety of GE appliance and a brochure to assist in planning barrier-free kitchen for persons with limited mobility To obtain these item free of charge, call 800.626.2000.

Consumers with impaired hearing or speech who have access to a TDD or a conventional teletypewriter may call 800-TDD-GEAC (800-833-4322) to request information or service.

Parts and Accessories
800-626-2002

Individuals qualified to service their own appliances can have needed parts or accessories sent directly to their home, free of shipping charge! The GE parts system provides access to over 47,000 parts.. and all GE Genuine Renewal Parts are fully warranted. VISA, MasterCard and Discover cards are accepted.

User **maintenance instructions contained in this booklet cover procedures intended to be performed by any user. Other servicing generally should be referred to qualified service personnel. Caution must be exercised, since improper servicing may cause unsafe operation.**

YOUR GE ROOM AIR CONDITIONER

WARRANTY

Save proof of original purchase date such as your sales slip or cancelled check to establish warranty period.

WHAT IS COVERED

FULL ONE-YEAR WARRANTY

For one year from date of original purchase, we will provide, free of charge, parts and service labor in your home to repair or replace ***any part of the room air conditioner*** that fails because of a manufacturing defect.

FULL FIVE-YEAR WARRANTY

For five years from the date of original purchase, we will provide, free of charge, parts and service labor in your home to repair or replace ***any part of the sealed refrigerating system*** (the compressor, condenser, evaporator and all connecting tubing) that fails because of a manufacturing defect.

For **each of *the* above warranties:** Transportation expense to and from a service shop and shop service labor if required will be free of charge.

This warranty is extended to the original purchaser and any succeeding owner for products purchased for use in the 48 mainland states, Hawaii and Washington, D.C. In Alaska the warranty is the same except that it is LIMITED because you must pay to ship the product to the service shop or for the service technician's travel costs to your home.

All warranty service will be provided by our Factory Service Centers or by our authorized Customer Care® servicers during normal working hours.

Look in the White or Yellow Pages of your telephone directory for GENERAL ELECTRIC COMPANY, GENERAL ELECTRIC FACTORY SERVICE, GENERAL ELECTRIC-HOTPOINT FACTORY SERVICE or GENERAL ELECTRIC CUSTOMER CARE® SERVICE.

WHAT IS NOT COVERED

. Service trips to teach you how to use the product.

Read your Use **and Care material.** If you then have any questions about operating the product, please contact your dealer or our Consumer Affairs office at the address below, or call, toll free:

GE Answer Center"
800.626.2000
consumer information service

. Improper installation.

If you have an installation problem, or if the air conditioner is of improper cooling capacity for the intended use, contact your dealer or installer. You are responsible for providing adequate electrical connecting facilities.

. Replacement of fuses or resetting of circuit breakers.

• In commercial locations labor necessary to move the unit to a location where it is accessible for service by an individual technician.

• Failure of the product resulting from modifications to the product or due to unreasonable use including failure to provide reasonable and necessary maintenance.

. Failure **due to corrosion** on models not corrosion-protected.

• Damage to the product caused by improper power supply voltage, accident, fire, floods or acts of God.

WARRANTOR IS *NOT* RESPONSIBLE FOR CONSEQUENTIAL DAMAGES.

Some states do not allow the exclusion or limitation of incidental or consequential damages, so the above limitation or exclusion may not apply to you. This warranty gives you specific legal rights, and you may also have other rights which vary from state to state. To know what your legal rights are in your state, consult your local or state consumer affairs office or your state's Attorney General.

Warrantor: General Electric Company

If further help is needed concerning this warranty, write:
Manager—Consumer Affairs, GE Appliances, Louisville, KY 40225

I Pub. No. 49-7244

1-91 CG

AVX06
AVX08
AVX10