GE Appliances

Room Air Conditioners

Owner's Manual & Installation Instructions

AG_08 – 8,000 BTU models
AG_10 – 10,000 BTU models
AG_12– 12,000 BTU models



Pub. No. 49-7377-1 CG 11-98

Safety Instructions

Safety Information

Safety Precautions 3
Use of Extension Cords 4
Use of Adapter Plugs 4

Operating Instructions

Operating Instructions

Controls 5, 6
Care and Cleaning 7

Installation Instructions

Installation Instructions

Preparing to Install the Air Conditioner 8
Window Installation 9–13

Troubleshooting Tips

Troubleshooting Tips

Before You Call For Service 14
Normal Operating Sounds 14

Customer Service

Customer Service

Warranty 15
Service Telephone Numbers . . . . . .Back Cover

Congratulations! You Are Now Part of the GE Family

Welcome to the GE family. We're proud of our quality products and we are committed to providing dependable service. You'll see it in this easy-to-use Owner's Manual and you'll hear it in the friendly voices of our customer service department.

Best of all, you'll experience these values each time you use your air conditioner. That's important, because your new air conditioner will be part of your family for many years. And we hope you will be part of ours for a long time to come.

We thank you for buying GE. We appreciate your purchase, and hope you will continue to rely on us whenever you need quality appliances for your home.

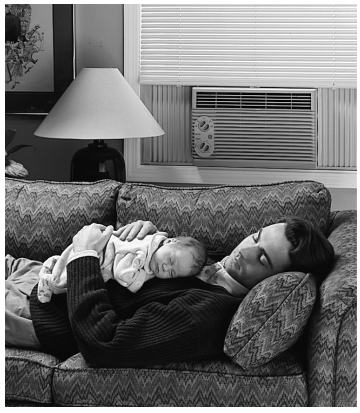

GE & You, A Service Partnership.



IMPORTANT!

Fill out and return the Consumer Product Registration Card that is packed with this product.

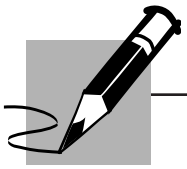

FOR YOUR RECORDS

Write the model and serial numbers here:

_____

_____

You can find them on a label on the side of the air conditioner.

Staple sales slip or cancelled check here.

Proof of the original purchase date is needed to obtain service under the warranty.

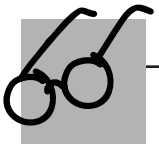

READ THIS MANUAL

Inside you will find many helpful hints on how to use and maintain your air conditioner properly. Just a little preventive care on your part can save you a great deal of time and money over the life of your air conditioner.



IF YOU NEED SERVICE

You'll find many answers to common problems in the *Before You Call For Service* section. If you review our chart of *Troubleshooting Tips* first, you may not need to call for service at all.

If you do need service, you can relax knowing help is only a phone call away. A list of toll-free customer service numbers is included in the back section. Or, you can always call the GE Answer Center® at 800.626.2000, 24 hours a day, 7 days a week.

IMPORTANT SAFETY INFORMATION. READ ALL INSTRUCTIONS BEFORE USING.

⚠ WARNING!

For your safety, the information in this manual must be followed to minimize the risk of fire, electric shock or personal injury.

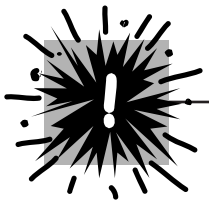

SAFETY PRECAUTIONS

- Use this appliance only for its intended purpose as described in this Owner's Manual.
- This air conditioner must be properly installed in accordance with the Installation Instructions before it is used.
- Never unplug your air conditioner by pulling on the power cord. Always grip plug firmly and pull straight out from the receptacle.
- Repair or replace immediately all electric service cords that have become frayed or otherwise damaged. Do not use a cord that shows cracks or abrasion damage along its length or at either the plug or connector end.
- Turn the mode control to ***OFF*** and unplug your air conditioner before making any repairs or cleaning.

  NOTE: We strongly recommend that any servicing be performed by a qualified individual.
- For your safety...do not store or use combustible materials, gasoline or other flammable vapors or liquids in the vicinity of this or any other appliance.

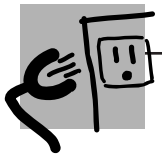

HOW TO CONNECT ELECTRICITY

Do not, under any circumstances, cut or remove the third (ground) prong from the power cord. For personal safety, this appliance must be properly grounded.

The power cord of this appliance is equipped with a 3-prong (grounding) plug which mates with a standard 3-prong (grounding) wall outlet to minimize the possibility of electric shock hazard from this appliance.

Have the wall outlet and circuit checked by a qualified electrician to make sure the outlet is properly grounded.

Where a 2-prong wall outlet is encountered, it is your personal responsibility and obligation to have it replaced with a properly grounded 3-prong wall outlet.

The air conditioner should always be plugged into its own individual electrical outlet which has a voltage rating that matches the rating plate.

This provides the best performance and also prevents overloading house wiring circuits which could cause a fire hazard from overheated wires.

See the Installation Instructions, *Electrical Requirements* section for specific electrical connection requirements.

IMPORTANT SAFETY INFORMATION. READ ALL INSTRUCTIONS BEFORE USING.

⚠ WARNING!



USE OF EXTENSION CORDS—115-Volt models only

Because of potential safety hazards under certain conditions, we strongly recommend against the use of an extension cord.

However, if you must use an extension cord, it is absolutely necessary that it be a UL-listed, 14 gauge, 3-wire grounding type appliance extension cord having a grounding type plug and outlet and that the electrical rating of the cord be 15 amperes (minimum) and 125 volts.

⚠ CAUTION:

DO NOT use an extension cord with any of the 230/208 volt models.

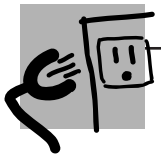

USE OF ADAPTER PLUGS—115-Volt models only

Because of potential safety hazards under certain conditions, we strongly recommend against the use of an adapter plug.

However, if you must use an adapter, where local codes permit, a ***temporary connection*** may be made to a properly grounded 2-prong wall outlet by use of a UL-listed adapter available at most local hardware stores.

The larger slot in the adapter must be aligned with the larger slot in the wall outlet to provide proper polarity in the connection of the power cord.

When disconnecting the power cord from the adapter, always hold the adapter in place with one hand while pulling the power cord plug with the other hand. If this is not done, the adapter ground terminal is very likely to break with repeated use.

If the adapter ground terminal breaks, ***DO NOT USE*** the air conditioner until a proper ground has been established.

Attaching the adapter ground terminal to a wall outlet cover screw does not ground the appliance unless the cover screw is metal, and not insulated, and the wall outlet is grounded through the house wiring. You should have the circuit checked by a qualified electrician to make sure the outlet is properly grounded.



Read and follow this Safety Information carefully.

SAVE THESE INSTRUCTIONS

About the controls on the air conditioner.

The controls will look like one of the following. (Features and appearance will vary.)

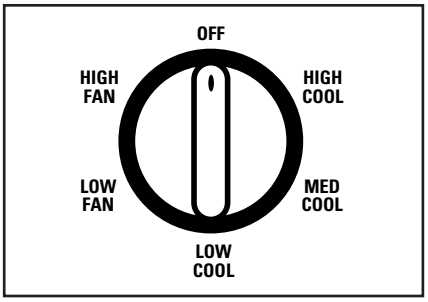

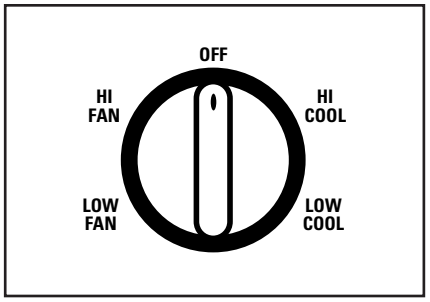

1 MODE CONTROLS

Your model will have one of the above controls.

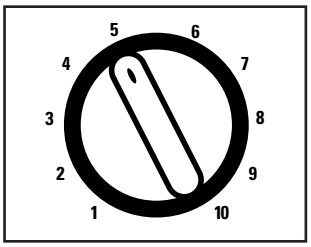

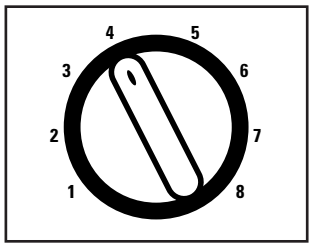

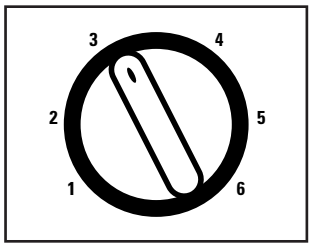

2 TEMP CONTROLS

Your model will have one of the above controls.



Controls

1 Mode Controls

HIGH COOL, MED COOL and ***LOW COOL*** provide cooling with different fan speeds.

LOW FAN or ***HIGH FAN*** provides air circulation and filtering without cooling.

NOTE: *If you move the switch from a cool setting to* ***OFF*** *or to a fan setting, wait at least 3 minutes before switching back to a cool setting.*

Cooling Descriptions

For Normal Cooling—Select ***HIGH COOL*** or ***MED COOL*** with the temp control at midpoint.

For Maximum Cooling—Select ***HIGH COOL*** with the temp control at the highest number available on your knob.

For Quieter & Nighttime Cooling—Select ***LOW COOL*** with the temp control at midpoint.

2 Temp Controls

The temp control is used to maintain the room temperature. The compressor will cycle on and off to keep the room at the same level of comfort. When you turn the knob to a higher number the indoor air will become cooler. Turn the knob to a lower number and the indoor air will become warmer.

About the controls on the air conditioner.

Additional controls and important information.

Energy Saver *(on some models)*

The energy saver switch controls the fan.

ON—The fan and compressor cycle on and off together. This results in wider variations of room temperature and humidity. Normally used when the room is unoccupied.

OFF—The fan runs all the time, while the compressor cycles on and off.

This switch must be set at ***OFF*** in order to use the fan settings (on the mode control).

Vent Control

The vent control is located above the control knobs.

When set at ***CLOSE***, only the air inside the room will be circulated and conditioned. When set at ***OPEN***, some inside air is exhausted outside.

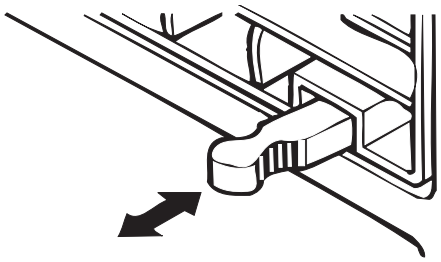

To open the vent, pull the lever toward you.
To close it, push it in.

Air Direction – Side-to-Side

On some models, the side-to-side air direction is adjusted by moving the lever to the left or right.

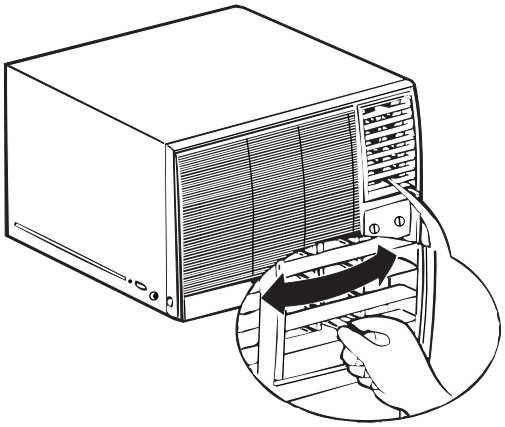

CIRCULAIRE *(on some models)*

For fixed side-to-side air direction, set the Circulaire switch to ***ON*** until the desired air direction is obtained, then move it to ***OFF***.

For continuous side-to-side air circulation, set the Circulaire switch to ***ON*** and leave it there.

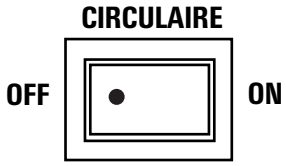

Air Direction – Up and Down

Fingertip pressure on the horizontal louvers adjusts the air direction up or down.

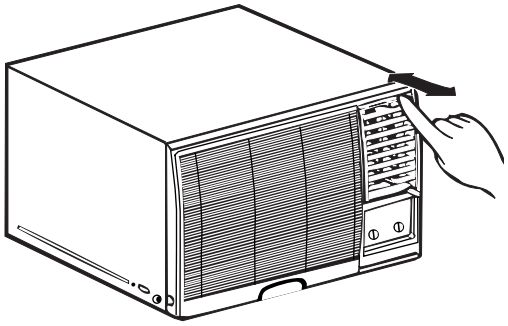

Care and cleaning of the air conditioner.

Grille and Case

Turn the air conditioner off and remove the plug from the wall outlet before cleaning.

To clean, use water and a mild detergent. Do not use bleach or abrasives.

Outdoor Coils

The coils on the outdoor side of the air conditioner should be checked regularly. If they are clogged with dirt or soot they may be professionally steam cleaned, a service available through your GE service outlet.

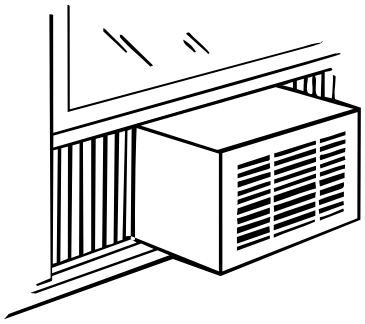

Air Filter

The air filter behind the front grille should be checked and cleaned at least every 30 days or more often if necessary.

To remove:

1. Open the inlet grille upward by pulling out the bottom of the inlet grille.
2. Using the tab, pull up slightly on the filter to release it and pull it down.

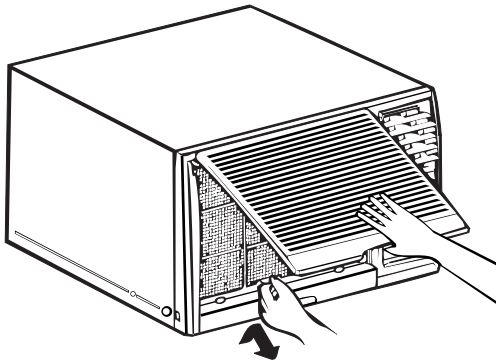

Clean the filter with warm, soapy water. Rinse and let the filter dry before replacing it.

CAUTION: *DO NOT operate the air conditioner without a filter because dirt and lint will clog it and reduce performance.*

Preparing to install the air conditioner.

Read these instructions completely and carefully.



Before You Begin

NOTE TO INSTALLER: *Leave these instructions with the air conditioner after installation is completed.*

NOTE TO CONSUMER: *Keep this Owner's Manual and Installation Instructions for future use.*

IMPORTANT NOTES:

For personal safety, this air conditioner must be properly grounded.

It is important to have the wall outlet and circuit checked by a qualified electrician if there is any doubt as to whether a proper ground exists.

Follow National Electric Codes (NEC) and/or local codes and ordinances.



CAUTION:
Do not, under any circumstances, cut or remove the third (ground) prong from the power cord.

Do not change the plug on the power cord of this air conditioner.

Aluminum house wiring may present special problems—consult a qualified electrician.

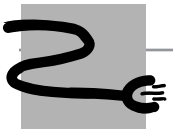

Electrical Requirements



Some models require 115/120-volt a.c., 60 Hz grounded outlet protected with a 15-amp time delay fuse or circuit breaker.

The 3-prong grounding plug minimizes the possibility of electric shock hazard. If the wall outlet you plan to use is only a 2-prong outlet, it is your responsibility to have it replaced with a properly grounded 3-prong wall outlet.



Some models require 230/208-volt a.c., protected with a time delay fuse or circuit breaker. These models should be installed on their own single branch circuit for best performance and to prevent overloading house or apartment wiring circuits, which could cause a possible fire hazard from overheating wires.

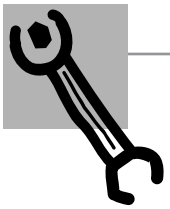

Tools You Will Need

- Phillips-head screwdriver
- Flat-blade screwdriver
- Ruler or tape measure
- Scissors or knife
- Pencil
- Level

Window Installation Instructions

Parts Included

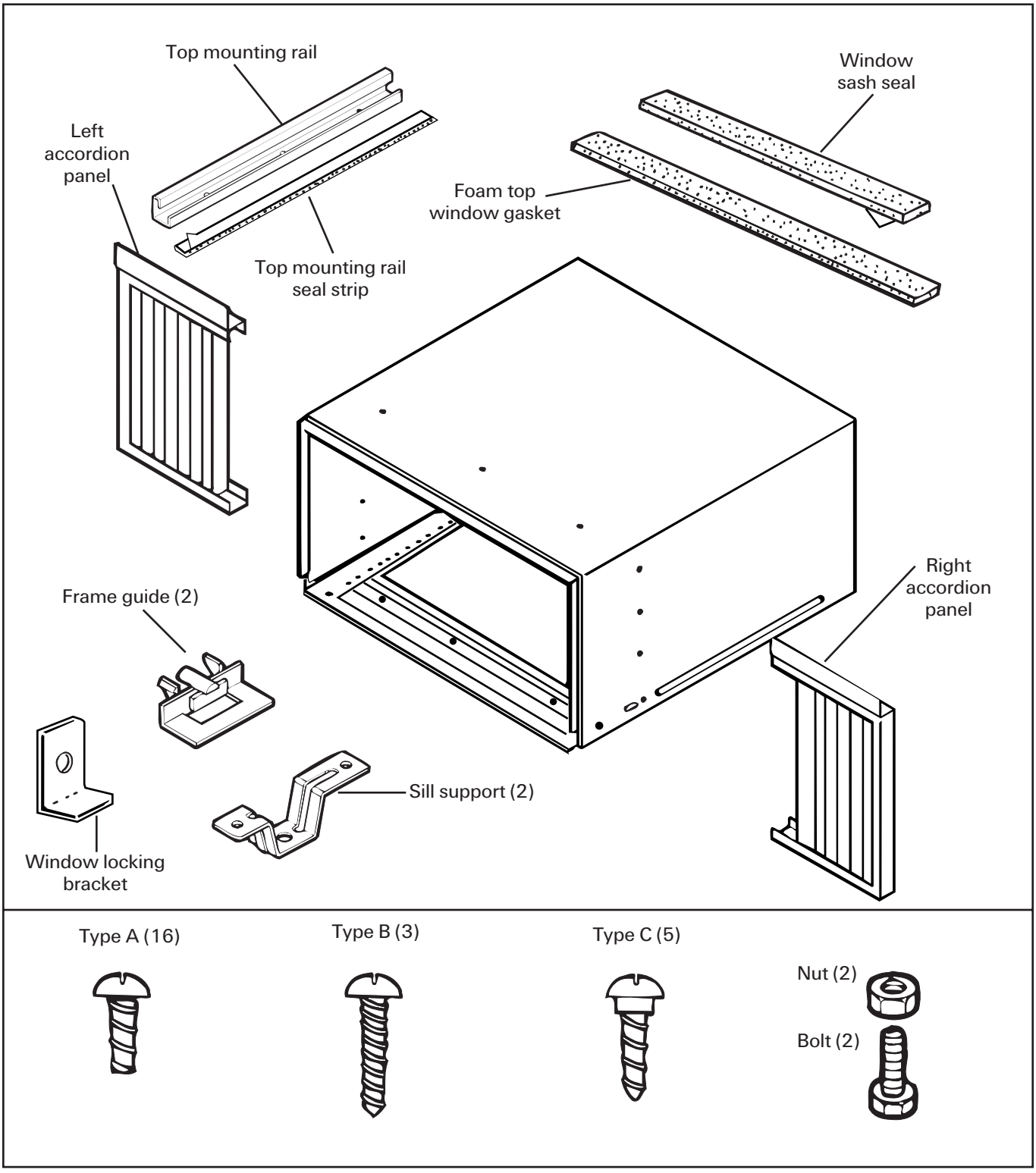

Window Installation Instructions

Read completely, then follow step-by-step.

1 Window Requirements

- These instructions are for a standard double-hung window. You will need to modify them for other types of windows.
- The air conditioner can be installed without the accordion panels if needed to fit in a narrow window. See the window opening dimensions below.
- All supporting parts must be secured to firm wood, masonry or metal.
- The electrical outlet must be within reach of the power cord.

8,000 BTU models

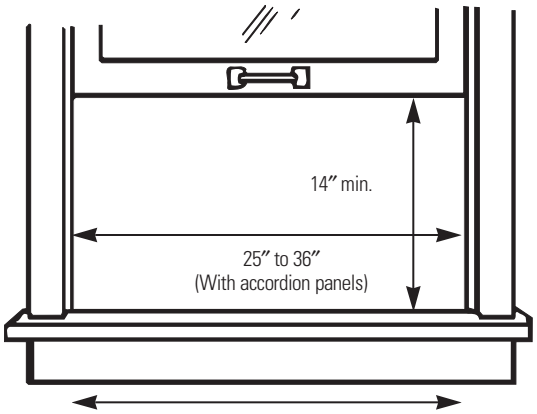

10,000 and 12,000 BTU models

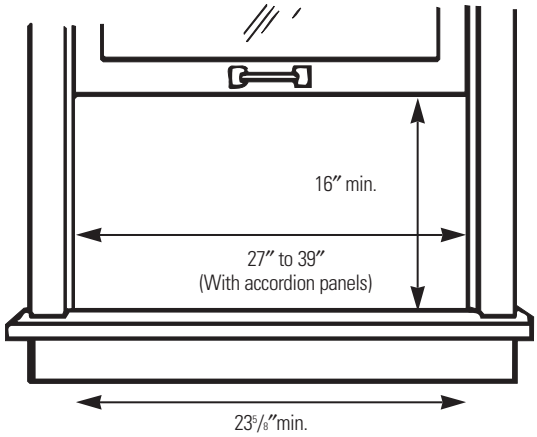

2 Storm Window Requirements

A storm window frame will not allow the air conditioner to tilt towards the outside and will keep it from draining properly. To adjust for this, attach a piece of wood to the stool.

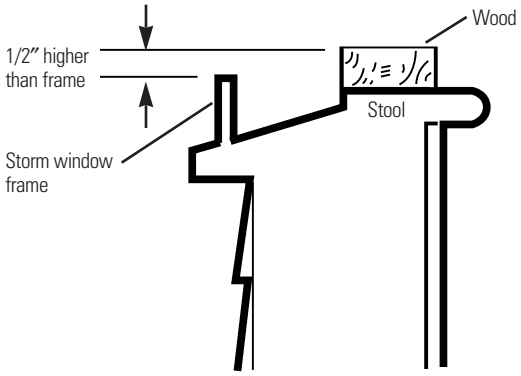

WOOD PIECES—

WIDTH: 2″

LENGTH: Long enough to fit inside the window frame.

THICKNESS: To determine the thickness, place a piece of wood on the stool to make it 1/2″ higher than the top of the storm window frame.

Attach securely with nails or screws provided by the installer.

3 Remove the Air Conditioner From the Case

A Remove the 2 shipping screws from the back of the case.

B Remove the 2 screws on each side of the case. Keep these for later use.

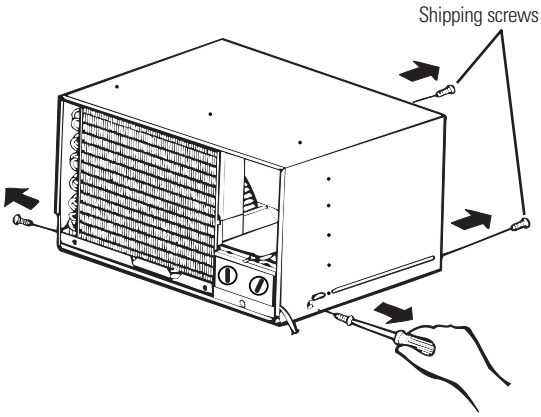

C Slide the air conditioner from the case by gripping the base pan handle and pulling forward while bracing the case.

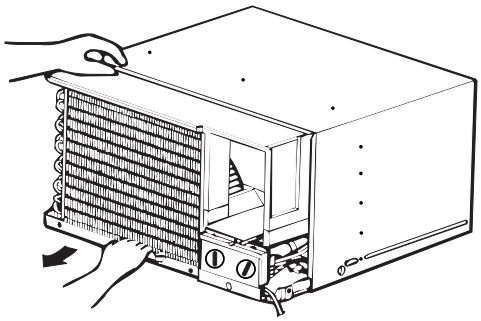

4 Prepare the Window and the Case

A Cut the window sash seal to the proper length. Peel off the backing and attach the seal to the underside of the window sash.

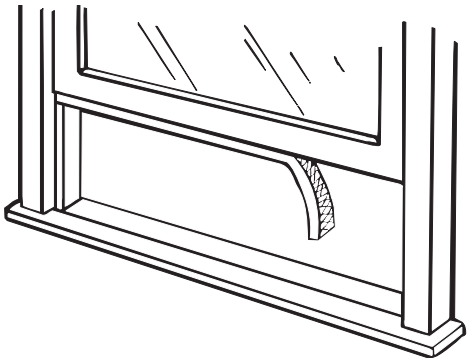

B Carefully insert the plastic frame guides into the bottom of the case on each side.

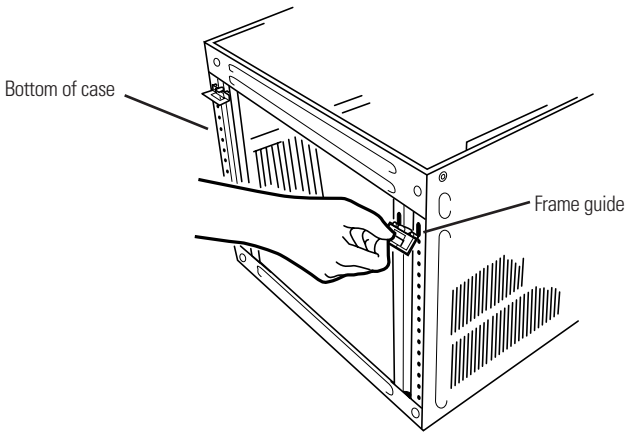

C Remove the backing from the top mounting rail seal strip and attach it to the bottom of the top mounting rail.

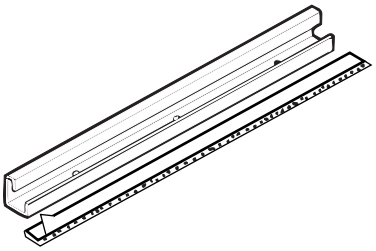

D Install the top mounting rail with 3 type A screws on the inside of the case. Insert the frames for the accordion panels into the top mounting rail and the frame guides. Attach the accordion panels to the side of the case using4 type A screws.

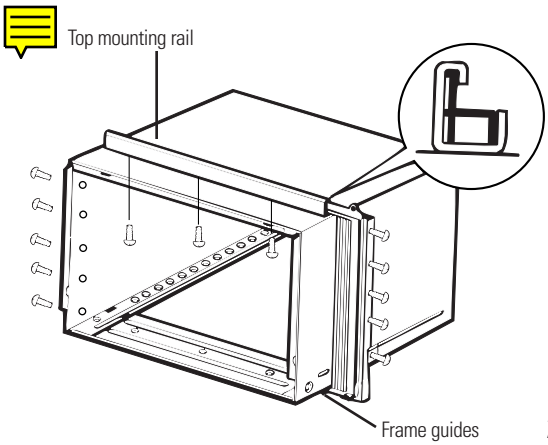

Window Installation Instructions

5 Install the Case in the Window

A Open the window and mark the centerline of the window stool.

B Carefully place the case on the window stool and align the center mark on the bottom front with the centerline of the stool.

C Pull the window down behind the top mounting rail.

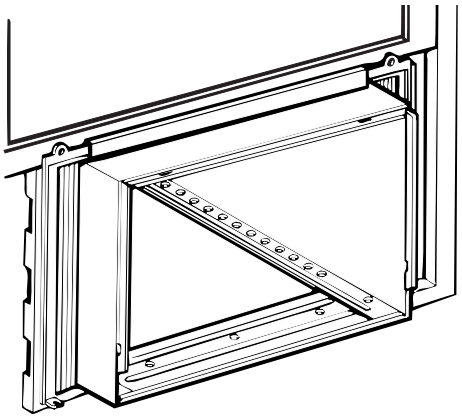

NOTE: *Do not shut the window so tightly that movement of the accordion panels is restricted.*

D Loosely assemble the sill supports.

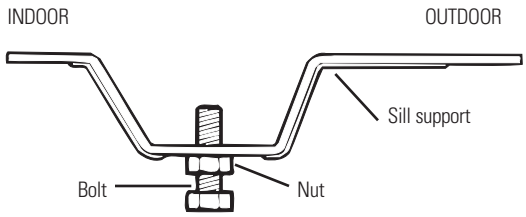

E Select the position that will place the sill supports near the outermost point on the sill. Attach the sill supports to the case track hole in relation to the selected position using 2 type A screws in each support.

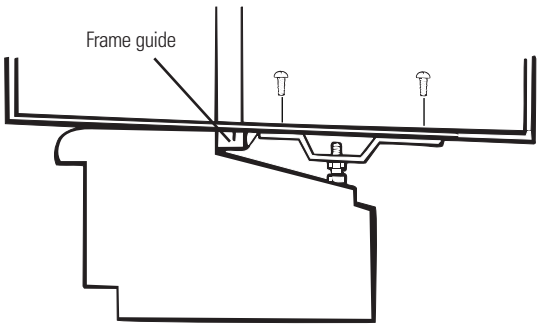

F Adjust the bolt and the nut in each support so that the case is installed with a slight downward tilt (about 1/4″) toward the outside.

G Secure the case to the window stool by using 3 type B screws.

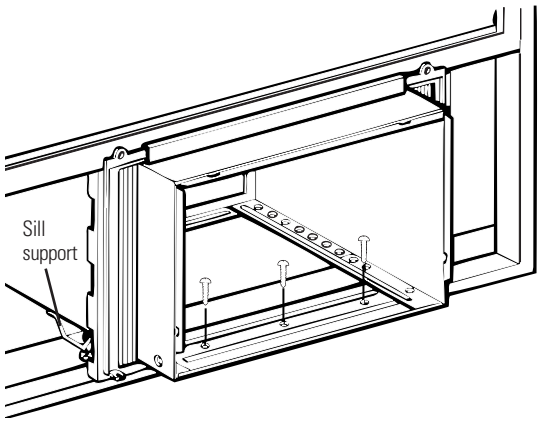

H Pull the accordion panels to each window sash track. Attach them on each side to the window sash and the window stool using 4 type C screws.

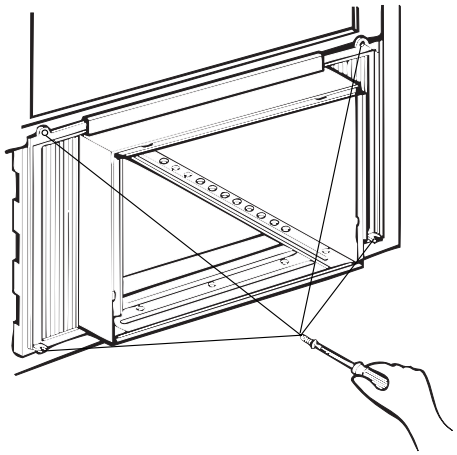

6 Install the Window Locking Bracket and the Foam Top Window Gasket

A Attach the window locking bracket with a type C screw.

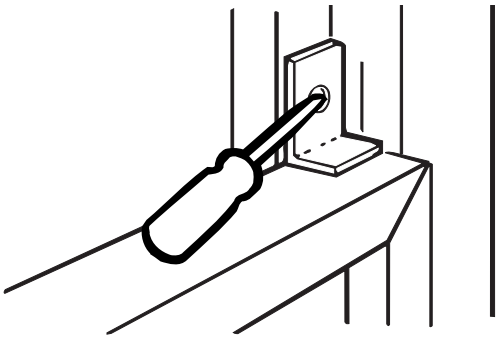

B Cut the foam top window gasket to the window width.

C Stuff the foam between the glass and the window to prevent air and insects from getting into the room.

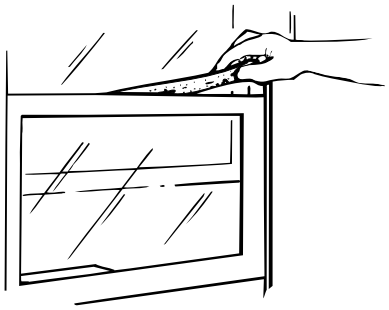

7 Install the Air Conditioner in the Case

A Slide the air conditioner into the case. Reinstall the 2 screws removed earlier on each side of the case.

B Before installing the front grille, pull out the vent control lever located above the unit control knobs, as shown.

8,000 BTU models:

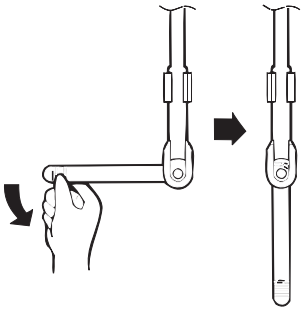

10,000 and 12,000 BTU models:

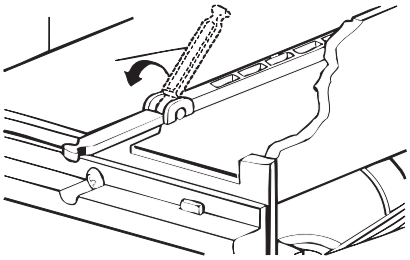

C Attach the front grille to the case by inserting the tabs on the grille into the slots on the front of the case. Push the grille in until it snaps into place.

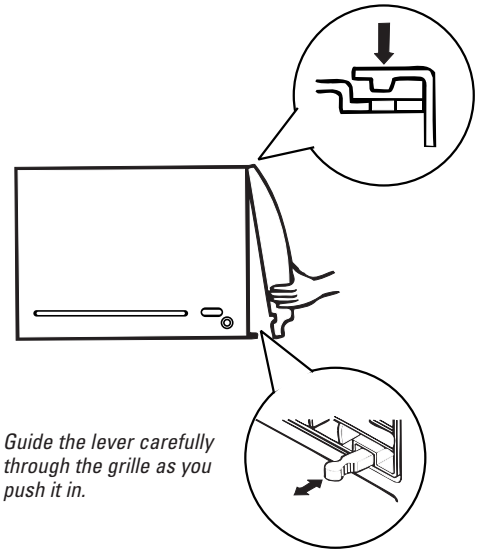

Guide the lever carefully through the grille as you push it in.

D Lift the inlet grille and secure the front frame with a type A screw through the front grille. Lower the inlet grille back into place.

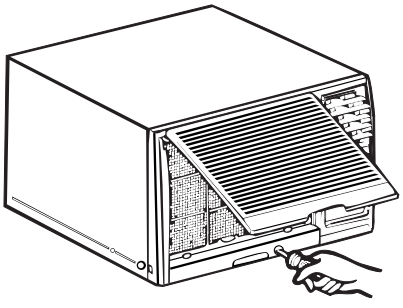

Before you call for service…



Troubleshooting Tips
Save time and money! Review the chart below first and you may not need to call for service.

Problem	Possible Causes	What To Do
Air conditioner does not start	**The air conditioner is unplugged.**	• Make sure the air conditioner plug is pushed completely into the outlet.
	The fuse is blown/circuit breaker is tripped.	• Check the house fuse/circuit breaker box and replace the fuse or reset the breaker.
	Power failure.	• If power failure occurs, turn the mode control to ***OFF***. When power is restored, wait 3 minutes to restart the air conditioner to prevent tripping of the compressor overload.
Air conditioner does not cool as it should	**Airflow is restricted.**	• Make sure there are no curtains, blinds or furniture blocking the front of the air conditioner.
	The temp control may not be set high enough.	• Turn the knob to a higher number. The highest setting provides maximum cooling.
	The air filter is dirty.	• Clean the filter at least every 30 days. See the *Operating Instructions* section.
	The room may have been hot.	• When the air conditioner is first turned on you need to allow time for the room to cool down.
	Cold air is escaping.	• Check for open furnace floor registers and cold air returns. • Set the air conditioner's vent to the closed position.
	Cooling coils have iced up.	• See "Air conditioner freezing up" below.
Air conditioner freezing up	**Ice blocks the air flow and stops the air conditioner from cooling the room.**	• Set the mode control at ***HIGH FAN*** or ***HIGH COOL*** with the temp at ***1*** or ***2***.

Normal Operating Sounds

- You may hear a pinging noise caused by water being picked up and thrown against the condenser on rainy days or when the humidity is high. This design feature helps remove moisture and improve efficiency.
- You may hear the thermostat click when the compressor cycles on and off.
- Water will collect in the base pan during high humidity or on rainy days. The water may overflow and drip from the outdoor side of the unit.
- The fan may run even when the compressor is not.

Air Conditioner Warranty



All warranty service provided by our Factory Service Centers, or an authorized Customer Care® technician. For service, call 800-GE-CARES.

For The Period Of:	GE Will Replace:
One Year *From the date of the original purchase*	***Any part*** of the air conditioner which fails due to a defect in materials or workmanship. During this ***full one-year warranty,*** GE will also provide, ***free of charge,*** all labor and in-home service to replace the defective part.
Five Years *From the date of the original purchase*	***Any part of the sealed refrigerating system*** (the compressor, condenser, evaporator and all connecting tubing) which fails due to a defect in materials or workmanship. During this ***five-year warranty,*** GE will also provide, ***free of charge,*** all labor and in-home service to replace the defective part.

What GE Will Not Cover:

- **Service trips to your home to teach you how to use the product.**
- **Improper installation. If you have an installation problem, or if the air conditioner is of improper cooling capacity for the intended use, contact your dealer or installer. You are responsible for providing adequate electrical connecting facilities.**
- **Failure of the product resulting from modifications to the product or due to unreasonable use including failure to provide reasonable and necessary maintenance.**
- **In commercial locations labor necessary to move the unit to a location where it is accessible for service by an individual technician.**
- **Replacement of house fuses or resetting of circuit breakers.**
- **Failure due to corrosion on models not corrosion-protected.**
- **Damage to the product caused by improper power supply voltage, accident, fire, floods or acts of God.**
- **Incidental or consequential damage to personal property caused by possible defects with this air conditioner.**

This warranty is extended to the original purchaser and any succeeding owner for products purchased for home use within the USA. In Alaska, the warranty excludes the cost of shipping or service calls to your home.

Some states do not allow the exclusion or limitation of incidental or consequential damages. This warranty gives you specific legal rights, and you may also have other rights which vary from state to state. To know what your legal rights are, consult your local or state consumer affairs office or your state's Attorney General.

Warrantor: General Electric Company. Louisville, KY 40225

Service Telephone Numbers.



GE Answer Center® 800.626.2000

The GE Answer Center® is open 24 hours a day, 7 days a week.



In-Home Repair Service 800-GE-CARES (800-432-2737)

Expert GE repair service is only a phone call away.

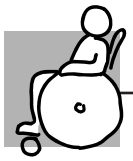

Special Needs Service 800.626.2000

800-TDD-GEAC (800-833-4322)

GE offers, free of charge, a brochure to assist in planning a barrier-free kitchen for persons with limited mobility.



Service Contracts 800-626-2224

Purchase a GE service contract while your warranty is still in effect and you'll receive a substantial discount. GE Consumer Service will still be there after your warranty expires.

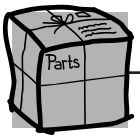

Parts and Accessories 800-626-2002

Individuals qualified to service their own appliances can have parts or accessories sent directly to their homes (VISA, MasterCard and Discover cards are accepted).

Instructions contained in this manual cover procedures to be performed by any user. Other servicing generally should be referred to qualified service personnel. Caution must be exercised, since improper servicing may cause unsafe operation.



Service Satisfaction

If you are not satisfied with the service you receive from GE:

First, contact the people who serviced your appliance.

Next, if you are still not pleased, write all the details—including your phone number—to:

Manager, Customer Relations
GE Appliances
Appliance Park
Louisville, KY 40225

Finally, if your problem is still not resolved, write:

Major Appliance Consumer Action Program
20 North Wacker Drive
Chicago, IL 60606

Printed in Korea