2021 SPRING CATALOG



This is smarter cooking.™

See how GE Profile is making kitchens smarter and lives simpler.

PG. 2

Appliances shown: French-Door refrigerator—PVD28BYNFS (pg. 18); Slide-in gas range—PGS960YPFS (pg. 114); Over-the-range microwave oven—PVM9179SKSS (pg. 137); Dishwasher—PDT785SYNFS (pg. 150); Beverage center—PVS06BSPSS (pg. 50); Ice Maker—XPIO13SCSS

Profile™ | GE APPLIANCES



Appliances shown: French-Door refrigerator—PVD28BYNFS (pg. 18); Slide-in gas range—PGS960YPFS (pg. 114); Over-the-range microwave oven—PVM9179SKSS (pg. 137); Dishwasher—PDT785SYNFS (pg. 150); Beverage center—PVS06BSPSS (pg. 50); Ice Maker—XPIO13SCSS

Profile™ | **A smarter kitchen**

Who will love it

GE Profile appliances are designed to make daily life simpler for those who:

- Crave Smart Home technology and cutting-edge features in every appliance
- Want updates that will upgrade their appliances over time
- Expect technology to help them achieve more every day

Appliances shown: French-door refrigerator—GFE28GMKES (pg. 20); Double wall oven—JTD5000ENES (pg. 65); 30" gas cooktop—JGP5030SLSS (pg. 93); Dishwasher—GDT665SMNES (pg. 151)

good things, for life. GE APPLIANCES

HAPPY AT HOME

WHO WILL LOVE IT

GE Appliances products are designed, built and tested for real life, which make them perfect for owners who:

- See their kitchen as the heart of their home and demand durability above all
- Prefer a modern twist on traditional appliances
- Appreciate time-tested features that get the job done

THE TRUE LEADER IN
PREMIUM FINISHES

When it comes to fingerprint resistant premium finishes, GE Appliances is an industry leader with more choices for more owners.

Finishes are available across all kitchen products.

RESISTANT









THE FUTURE IS SMART

Introducing SmartHQ™ Solutions from GE Appliances, the first end-to-end smart solution that combines our full suite of services and appliances, making us easier to do business with than ever.

SmartHQ™ SOLUTIONS

SmartHQ™ DISTRIBUTION

World-class smart distribution efficiently serves any channel. Intelligent warehouses reduce product handling, while smart transportation helps provide on-time time and damage-free deliveries.

- 90% US delivery coverage
- Reduced product handling
- Smart order tracking

SmartHQ™ MANAGEMENT

Remote appliance monitoring and diagnostic solution that saves time and money, increases productivity and enhances experiences thanks to next-level features and integration capabilities.

- Remote appliance monitoring
- Interoperable maintenance platform
- Warranty and maintenance management

SmartHQ™ HOME

Advanced smart appliances and services designed to make life easier, provide peace of mind and maximize performance.

- 600+ smart appliances
- Over-the-air updates
- Open, secure platform

SmartHQ™ SERVICE

Breakthrough service and diagnostic technology provides efficient solutions to diagnose and repair issues, creating a better ownership experience.

- Fast, accurate diagnostics
- Confident repairs
- Access to service history



SmartHQ Management allows you to control your fleet of appliances from anywhere.

TABLE OF CONTENTS

REFRIGERATION	Page	Specifications & Installation
Bottom-Freezer Refrigerators	14–23	278–283
Side-By-Side Refrigerators	24–31	284–287
Top-Freezer Refrigerators	32–41	288–292
Water Filters	42–44	373–375
Refrigeration Parts & Accessories	45	
Compact Refrigerators, Wine & Beverage Centers	46–51	293–294
Ice Makers	49	294
Freezers	52–57	295
COOKING		
Wall Ovens	62-73	296–305
Warming Drawers	73	306
Advantium®	74–75	307
Built-In Microwave Ovens	76–77	308–311
Cooktops	78–95	312–318
Ventilation	96–105	319–324
Drop-In Ranges	106–107	325–326
Slide-In Ranges	108–117	327–330
Free-Standing Electric Ranges	118–125	331–335
Free-Standing Gas Ranges	126–133	336–339
Over-The-Range Microwave Ovens	134–139	340–343
Cooking Parts & Accessories	75, 87, 94,102–104, 116–117, 124–125, 132–133, 139	
Countertop Microwave Ovens	140–143	344–345
DISHWASHERS		
Built-In Dishwashers	148–155	346–352
Spacemaker® Built-In Dishwashers	156	352–353
Portable Dishwashers & Compactors	157	353–354
Disposers	158–159	355
Dishwasher & Compactor Parts & Accessories	160–161	
CLOTHES CARE		
Front Load Washers & Dryers	168–171	356–361
Top Load Washers & Dryers	174–177	362–365
Stackable/Portable Washers/Dryers	178	366
Unitized Washers/Dryers	179	367
Clothes Care Parts & Accessories	180–185	
Dryer Exhausting & Installation Information		368–369
PACKAGE OPTIONS		
GE Free-Standing Package Options	188–195	
Profile™ Free-Standing Package Options	196–203	
GE Built-In Package Options	204–213	
Profile Built-In Package Options	214–223	
GE Clothes Care Package Options	224–229	
WATER SYSTEMS		
Electric Water Heaters	232–235	370
Flexible Capacity Electronic Water Heaters	236–237	371
Tankless Water Heaters	240–241	372
Geospring Solar Water Heaters	242–243	372
Softening Systems & Filtration Systems	244–247	373–375
CONSUMER COMFORT PRODUCTS		
Window Room Air Conditioners	252–258	376
Portable Room Air Conditioners	259–260	377
Dehumidifiers	261	377
Built-In Room Air Conditioners	262–263	378–380
Zoneline® Packaged Terminal Air Conditioners	264–267	381–384
Zoneline Single Packaged Vertical Units	268–269	380
Zoneline Vertical Parts & Accessories	270	
Zoneline Thermostats	271	
PRODUCT SPECIFICATIONS & INSTALLATIONS		
Cleaning Supplies and Accessories	272–273	
Warranty Information	274–276	
ADA Requirements/UFAS Standards	277	
Nomenclatures	385–388	

ENERGY STAR PARTNER

GE Appliances helps you conserve energy and save money. We have been an ENERGY STAR® Partner since 2001. We are committed to creating energy-efficient, high-performance household appliances.

As an ENERGY STAR partner, GE Appliances has determined that the appliances marked with the ENERGY STAR logo meet the ENERGY STAR guidelines for energy efficiency.

Before purchasing an ENERGY STAR certified appliance, read important information about its estimated annual energy consumption or energy-efficiency rating available from your retailer, geappliances.com or energystar.gov.

ADA COMPLIANT — Compliant with the Americans with Disabilities Act

UFAS COMPLIANT — Compliant with the Uniform Federal Accessibility Standards

Chef Connect—For instant convenience, choose when to automatically sync clocks and the range elements with the microwave's or hood's surface light and vent.

The Bluetooth® word mark and logos are registered trademarks owned by Bluetooth SIG, Inc. and any use of such marks by GE Appliances is under license. Other trademarks and trade names are those of their respective owners.

Smart — Appliances with built-in WiFi powered by SmartHQ™ offer remote monitoring and enhanced features are indicated by this icon.

This mark indicates that a product has voice assistance capabilities..

Appliances with this icon are Made in America and contain 70 to 90% U.S. content. Product content details at GEAppliances.com/USA

GE Appliances and the SmartHQ app use industry-best practices for IoT cybersecurity and consumer data protection.

REFRIGERATION

Profile™

OPEN THE DOOR TO OPTIONS

Whether it's the bold technology inside GE Profile™ or the unwavering durability of a GE Appliances model, limitless combinations of features and styles give every owner a refrigerator that's theirs.


PYD22KBLTS—See pg. 16.


PSB42YSNSS—See pg. 31.


PVD28BYNFS—See pg. 18.

GE APPLIANCES


GYE22GYNFS—See pg. 17.


GTS16DTNRWW—See pg. 41.


GLE12HSPSS—See pg. 23.


GNE25JMKES—See pg. 22.


FUF17DLRWW—See pg. 54.




GWS04HAESS—See pg. 50.


FCM16DLWW—See pg. 56.

FRENCH-DOOR & BOTTOM-FREEZER REFRIGERATORS

FEATURE HIGHLIGHTS



KEURIG® K-CUP® BREWING SYSTEM

Enjoy the unexpected convenience of hot, single-serve brewing at your fridge.



HANDS-FREE AUTOFILL

Walk away without worrying as the dispenser automatically fills your container with filtered water.



SPACE-SAVING ICEMAKER

Have more usable storage space thanks to an icemaker with integrated bins, located on the door.



HOT WATER SCHEDULING VIA SmartHQ™

Have hot water waiting for you any time of day. Just schedule hot water through SmartHQ, and enjoy ultimate convenience.



ADJUSTABLE-TEMP DRAWER WITH BIN CADDY

Enjoy more storage flexibility and better organization with a removable bin caddy that's perfect for storing canned drinks and more.



DOOR IN DOOR

Easily store and access your favorites, including taller items like wine bottles, with an innovative Door in Door design and convenient rotating bin.



TWINCHILL™ EVAPORATORS

Keep foods fresh with separate climates in the fresh-food and freezer sections that help maintain temperature and humidity levels.



FULL-WIDTH, ELECTRONIC TEMP-CONTROLLED DRAWER

Maintain the optimal temperatures for your favorite foods with three accurate settings.



SECOND ICEMAKER OPTION

Always have extra ice on hand with an optional second icemaker in the freezer (sold separately).

P GE Profile™ G GE Appliances

Not all features available on all models.

FRENCH-DOOR, COUNTER-DEPTH REFRIGERATORS



PYE22PYN

GE PROFILE™ 22.1 CU. FT. SMART REFRIGERATOR

- **Keurig® K-Cup® brewing system**
- **Hot Water Scheduling via SmartHQ™**
- Full-width, electronic temperature-controlled drawer with LED lights
- Advanced water filtration uses RPWFE replacement filter
- TwinChill™ evaporators
- Showcase LED lighting
- Quick Space shelf
- Built-In WiFi powered by SmartHQ
- Drop-down tray
- Turbo Cool and Turbo Freeze settings

Fingerprint Resistant Stainless – PYE22ZPYNFS



PYD22KYN

GE PROFILE 22.1 CU. FT. SMART REFRIGERATOR

- **Door in Door**
- Hands-free Autofill
- Full-width, electronic temperature-controlled drawer with LED lights
- Second icemaker option (IM5D kit sold separately)
- TwinChill evaporators
- Advanced water filtration uses RPWFE replacement filter
- Showcase LED lighting
- Quick Space shelf
- WiFi optional*
- Drop-down tray

Fingerprint Resistant Stainless – PYD22KYNFS
Black Stainless – PYD22KBLTS



Model shown in Slate

PYE22KMK

GE PROFILE 22.1 CU. FT. SMART REFRIGERATOR

- **Hands-free Autofill**
- Full-width, electronic temperature-controlled drawer with LED lights
- Second icemaker option (IM5D kit sold separately)
- TwinChill evaporators
- Showcase LED lighting
- Quick Space shelf
- WiFi optional*
- Drop-down tray
- Turbo Cool and Turbo Freeze settings
- Advanced water filtration uses RPWFE replacement filter

Fingerprint Resistant Stainless – PYE22KYNFS
Black Stainless – PYE22KBLTS
Slate – PYE22KMKES
Black Slate – PYE22KELDS

Complete features and specifications on pages 278–279.
See page 277 for Accessibility Requirements.
Bold = feature upgrade from previous model.
For definitions of logos, see page 9.

*SmartHQ Connect Module is required and sold separately. It is available for order on geappliances.com, part number PBX23W00Y0.



Model shown in Slate

PWE23KMK

GE PROFILE 23.1 CU. FT. SMART REFRIGERATOR

- **Internal water dispenser**
- Factory-installed icemaker
- **Full-width, electronic temperature-controlled drawer with LED lights**
- TwinChill evaporators
- In-the-door controls with actual-temperature display
- **Drop-down tray**
- Advanced water filtration uses RPWFE replacement filter
- Showcase LED lighting
- **Quick Space shelf**
- WiFi optional*
- Turbo Cool and Turbo Freeze settings

Fingerprint Resistant Stainless – PWE23KYNFS
Slate – PWE23KMKES
Black Slate – PWE23KELDS



GYE22GYN

GE 22.1 CU. FT. SMART REFRIGERATOR

- Space-saving icemaker
- Second icemaker option (IM5D kit sold separately)
- Advanced water filtration uses RPWFE replacement filter
- Showcase LED lighting
- TwinChill evaporators
- WiFi optional*
- 2 humidity-controlled drawers and full-width drawer with LED light

Fingerprint Resistant Stainless – GYE22GYNFS
Slate – GYE22GMNES
Black Slate – PWE23KELDS



GWE23GYN

GE 23.1 CU. FT. SMART REFRIGERATOR

- TwinChill evaporators
- Showcase LED lighting
- 2 humidity-controlled drawers and full-width drawer with LED light
- Factory-installed icemaker with water filtration system
- Advanced water filtration uses RPWFE replacement filter
- WiFi optional*

Fingerprint Resistant Stainless – GWE23GYNFS
Slate – GWE23GMNES
Black Slate – GWE23GENDS

FRENCH-DOOR, COUNTER-DEPTH REFRIGERATORS





GYE18JSL

GE 17.5 CU. FT. SMART REFRIGERATOR

- Fits 33" openings
- **External ice and water dispenser with temperature display**
- LED lighting
- 2 humidity-controlled drawers and 1 full-width, adjustable-temperature drawer
- Turbo Cool setting
- Quick Space shelf
- WiFi optional*
- Advanced water filtration uses XWFE replacement filter

Stainless – GYE18JSLSS
Slate – GYE18JMLES
Black Slate – GYE18JEMDS





GWE19JSL

GE 18.6 CU. FT. SMART REFRIGERATOR

- Fits 33" openings
- **Internal water dispenser**
- Factory-installed icemaker with water filtration system
- LED lighting
- 2 humidity-controlled drawers and 1 full-width, adjustable-temperature drawer
- Turbo Cool setting
- Quick Space shelf
- WiFi optional*
- Door alarm
- Upfront temperature controls with actual-temperature display
- Advanced water filtration uses XWFE replacement filter

Stainless – GWE19JSLSS
Slate – GWE19JMLES
High-gloss White – GWE19JGLWW
High-gloss Black – GWE19JGLBB

FRENCH-DOOR REFRIGERATORS





PVD28BYN

GE PROFILE™ 27.9 CU. FT. SMART REFRIGERATOR

- **Hands-free Autofill**
- **LED light wall**
- **Adjustable-temperature drawer with bin caddy**
- **Door in Door**
- **Soft-close drawers**
- Built-in WiFi powered by SmartHQ™
- TwinChill™ evaporators

Fingerprint Resistant Stainless - PVD28BYNFS

Complete features and specifications on pages 279–280.
See page 277 for Accessibility Requirements.
Bold = feature upgrade from previous model.
For definitions of logos, see page 9.

*SmartHQ Connect Module is required and sold separately. It is available for order on geappliances.com, part number PBX23W00Y0.





PFE28PYN

GE PROFILE 27.7 CU. FT. SMART REFRIGERATOR

- **Keurig® K-Cup® brewing system**
- **Hot Water Scheduling via SmartHQ**
- Full-width, electronic temperature-controlled drawer with LED lights
- Advanced water filtration uses RPWFE replacement filter
- TwinChill evaporators
- Showcase LED lighting
- Quick Space shelf
- **Built-In WiFi powered by SmartHQ**
- Drop-down tray
- Turbo Cool and Turbo Freeze settings

Fingerprint Resistant Stainless – PFE28PYNFS





Model shown in Black Stainless

PFD28KBL

GE PROFILE 27.7 CU. FT. SMART REFRIGERATOR

- **Door in Door**
- Hands-free Autofill
- Full-width, electronic temperature-controlled drawer with LED lights
- Second icemaker option (IM5D kit sold separately)
- TwinChill evaporators
- Showcase LED lighting
- Quick Space shelf
- WiFi optional*
- Drop-down tray
- Turbo Cool and Turbo Freeze settings
- Advanced water filtration uses RPWFE replacement filter

Fingerprint Resistant Stainless – PFD28KYNFS
Black Stainless – PFD28KBLTS





PFE28KYN

GE PROFILE 27.7 CU. FT. SMART REFRIGERATOR

- **Hands-free Autofill**
- Full-width, electronic temperature-controlled drawer with LED lights
- Second icemaker option (IM5D kit sold separately)
- TwinChill evaporators
- Showcase LED lighting
- Quick Space shelf
- WiFi optional*
- **Drop-down tray**
- Turbo Cool and Turbo Freeze settings
- Advanced water filtration uses RPWFE replacement filter

Fingerprint Resistant Stainless – PFE28KYNFS
Black Stainless – PFE28KBLTS
Slate – PFE28KMKES

FRENCH-DOOR REFRIGERATORS



Model shown in Black Slate

GFD28GEL

GE 27.7 CU. FT. SMART REFRIGERATOR

- **Door in Door**
- Second icemaker option (IM5D kit sold separately)
- Advanced water filtration uses RPWFE replacement filter
- Showcase LED lighting
- TwinChill™ evaporators
- 2 humidity-controlled drawers and 1 full-width drawer with LED light
- Turbo Cool and Turbo Freeze settings
- Space-saving icemaker
- WiFi optional*

Fingerprint Resistant Stainless – GFD28GYNFS
Slate – GFD28GMLES
Black Slate – GFD28GELDS



Model shown in Slate

GNE29GMK

GE 27.8 CU. FT. REFRIGERATOR

- TwinChill evaporators
- Showcase LED lighting
- 2 humidity-controlled drawers and full-width drawer
- Factory-installed icemaker with water filtration system
- Advanced water filtration uses RPWFE replacement filter
- **Internal controls with actual-temperature display**
- Door alarm
- Two-level freezer storage baskets
- WiFi optional*

Fingerprint Resistant Stainless – GNE29GYNFS
Slate – GNE29GMKES



GFE28GYN*

GE 27.7 CU. FT. SMART REFRIGERATOR

- Space-saving icemaker
- **Second icemaker option** (IM5D kit sold separately)
- Advanced water filtration uses RPWFE replacement filter
- **Showcase LED lighting**
- **TwinChill evaporators**
- **2 humidity-controlled drawers and full-width drawer with LED light**
- WiFi optional*

Fingerprint Resistant Stainless – GFE28GYNFS
Slate – GFE28GMKES
Black Slate – GFE28GELDS



GNE27JYM

GE 27.0 CU. FT. REFRIGERATOR

- **Internal water dispenser**
- Factory-installed icemaker with water filtration system
- LED lighting
- Spillproof shelves
- **2 humidity-controlled drawers and full-width drawer**
- Quick Space shelf
- WiFi optional*

Fingerprint Resistant Stainless – GNE27JYMFS
Slate – GNE27JMMES
White – GNE27JGMWW
Black – GNE27JGMBB



GFE26JYM

GE 25.6 CU. FT. SMART REFRIGERATOR

- Space-saving icemaker
- LED lighting
- **External controls with actual-temperature display, child lock and door alarm**
- Spillproof shelves
- 2 humidity-controlled drawers and full-width drawer
- Quick Space shelf
- WiFi optional*

Fingerprint Resistant Stainless – GFE26JYMFS
Slate – GFE26JMMES
Black Slate – GFE26JEMDS
White – GFE26JGMWW
Black – GFE26JGMBB



GNE27EYM

GE 27.0 CU. FT. REFRIGERATOR

- Factory-installed icemaker with water filtration system
- LED lighting
- Spillproof shelves
- 2 humidity-controlled drawers
- Quick Space shelf
- Turbo Cool setting
- WiFi optional*

Fingerprint Resistant Stainless – GNE27EYMFS

Complete features and specifications on pages 280–281.
See page 277 for Accessibility Requirements.
Bold = feature upgrade from previous model.
For definitions of logos, see page 9.

*SmartHQ™ Connect Module is required and sold separately. It is available for order on geappliances.com, part number PBX23W00Y0.

FRENCH-DOOR REFRIGERATORS



GFE24JSK

GE 23.7 CU. FT. SMART REFRIGERATOR

- Fits 33″ openings
- **External ice and water dispenser with temperature display**
- LED lighting
- 2 humidity-controlled drawers and 1 full-width, adjustable-temperature drawer
- Advanced water filtration uses XWFE replacement filter
- Turbo Cool setting
- Quick Space shelf
- WiFi optional*
- Door alarm

Stainless – GFE24JSKSS
Slate – GFE24JMKES
High-gloss White – GFE24JGKWW
High-gloss Black – GFE24JGKBB



Model shown in Slate

GNE25JMK

GE 24.7 CU. FT. SMART REFRIGERATOR

- Fits 33″ openings
- **Internal water dispenser**
- LED lighting
- Factory-installed icemaker
- 2 humidity-controlled drawers and 1 full-width, adjustable-temperature drawer
- Turbo Cool setting
- **Quick Space shelf**
- WiFi optional*
- Door alarm
- Advanced water filtration uses XWFE replacement filter

Stainless – GNE25JSKSS
Slate – GNE25JMKES
High-gloss White – GNE25JGKWW
High-gloss Black – GNE25JGKBB



GNE21FSK

GE 20.8 CU. FT. SMART REFRIGERATOR

- Fits 30″ openings
- LED lighting
- **2 humidity-controlled drawers and 1 full-width, adjustable-temperature drawer**
- Factory-installed icemaker
- Advanced water filtration uses XWFE replacement filter
- Turbo Cool setting
- WiFi optional*
- Door alarm
- Upfront temperature controls with actual-temperature display

Stainless – GNE21FSKSS
Slate – GNE21FMKES

*SmartHQ™ Connect Module is required and sold separately. It is available for order on geappliances.com, part number PBX23W00Y0.

Complete features and specifications on pages 281–282.
See page 277 for Accessibility Requirements.
Bold = feature upgrade from previous model.
For definitions of logos, see page 9.

BOTTOM-FREEZER REFRIGERATORS



GDE25ESK

GE 24.8 CU. FT. SMART REFRIGERATOR

- Fits 33″ openings
- LED lighting
- **Sliding snack drawer**
- **Factory-installed icemaker**
- **Advanced water filtration uses XWFE replacement filter**
- 2 humidity-controlled drawers
- **Turbo Cool setting**
- **Door alarm**
- WiFi optional*
- **Upfront temperature controls with actual-temperature display**

Stainless – GDE25ESKSS

GDE21ESK

Similar to GDE25ESK, except fits 30″ opening with 21.0 cu. ft. capacity.

Stainless – GDE21ESKSS
Slate – GDE21EMKES
High-gloss White – GDE21EGKWW
High-gloss Black – GDE21EGKBB



Model shown in High-gloss White

GBE21DGK

GE 21.0 CU. FT. REFRIGERATOR

- Fits 30″ openings
- LED lighting
- Equipped for optional icemaker
- WiFi optional*
- Adjustable glass shelves
- 2 clear drawers

Stainless – GBE21DSKSS
High-gloss White – GBE21DGKWW
High-gloss Black – GBE21DGKBB

BOTTOM-FREEZER, COUNTER-DEPTH REFRIGERATOR



GLE12HSP

GE 11.9 CU. FT. REFRIGERATOR

- Fits 24″ openings
- Temp Zone crisper
- Equipped for optional icemaker (IM4D)
- LED lighting
- Interior electronic touch controls
- Bottle storage rack
- Sabbath mode capable

Stainless – GLE12HSPSS



SIDE-BY-SIDE REFRIGERATORS

FEATURE HIGHLIGHTS



SHOWCASE LED LIGHTING

Easily find even the smallest items thanks to 7 flush-mounted LED lights, which shed more crisp, even light throughout the interior without wasting space.



ARCTICA ICEMAKER

Fresh, filtered ice is within reach thanks to a cutting-edge Arctica icemaker and innovative easy-access door.



SPILLPROOF SHELVES

Contain spills and make cleanup quick and easy, thanks to spillproof glass shelving with raised edges.



CLEAR DOOR SHELVES

Adjustable, see-through door shelves provide flexible storage options for even large containers, and free up valuable space inside the refrigerator.



QUICK ICE SETTING

This refrigerator's icemaker features a cutting-edge Quick Ice setting which creates ice up to 50% faster than normal settings.



QUICK SPACE SHELF

Find the ideal place for your everything in your refrigerator—even hard-to-fit tall items, thanks to a clever Quick Space shelf, which easily slides back to create more space.



TURBO COOL SETTING

Quickly bring down the interior refrigerator temperature thanks to an innovative Turbo Cool setting, which circulates an extra boost of cold air throughout the interior when selected.



FREEZER DOOR SHELVES

Get more space in your freezer thanks to freezer door shelves, which provide the perfect spot for preserving your favorites.



SLIDE-OUT FREEZER BASKETS

Freeze larger items easily with an accessible slide-out freezer basket that provides additional storage options.

P GE Profile™ G GE Appliances

Not all features available on all models.

COUNTER-DEPTH SIDE-BY-SIDE REFRIGERATORS



PZS22MYK
GE PROFILE™ 21.9 CU. FT. REFRIGERATOR
- Showcase LED lighting
- Turbo Cool setting
- Quick Ice setting
- Quick Space shelf
- Interior storage drawers
- Adjustable glass shelves
- Easy-access icemaker

Fingerprint Resistant Stainless – PZS22MYKFS

UFAS COMPLIANT



GZS22IYN
GE 21.8 CU. FT. REFRIGERATOR
- Showcase LED lighting
- Edge-to-edge shelves
- Hidden hinges
- Interior storage drawers
- Glass freezer shelves
- Clear door shelves
- External dispenser
- Easy-access icemaker

Fingerprint Resistant Stainless – GZS22IYNFS
Black Slate – GZS22IENDS
Slate – GZS22IMNES

UFAS COMPLIANT



GZS22DSJ
GE 21.8 CU. FT. REFRIGERATOR
- LED lighting
- Integrated shelf support system
- Adjustable slide-out, spillproof glass shelves
- Adjustable clear door bins
- Fresh-food multi-level drawers
- Glass freezer shelves
- Advanced water filtration uses XWFE replacement filter

Stainless – GZS22DSJSS
Slate – GZS22DMJES
White – GZS22DGJWW
Black – GZS22DGJBB

UFAS COMPLIANT

Complete features and specifications on pages 285-286.
See page 277 for Accessibility Requirements.
Bold = feature upgrade from previous model.
For definitions of logos, see page 9.

SIDE-BY-SIDE REFRIGERATORS



PSS28KYH
GE PROFILE 28.2 CU. FT. REFRIGERATOR
- Showcase LED lighting
- Turbo Cool setting
- Quick Ice setting
- Quick Space shelf
- Interior storage drawers
- Adjustable glass shelves
- Arctica icemaker
- External dispenser
- Electronic display

Fingerprint Resistant Stainless – PSS28KYHFS

UFAS COMPLIANT



PSE25KYH
GE PROFILE 25.3 CU. FT. REFRIGERATOR
- Showcase LED lighting
- Turbo Cool setting
- Quick Ice setting
- Quick Space shelf
- Interior storage drawers
- Adjustable glass shelves
- Arctica icemaker
- External dispenser
- Electronic display

Fingerprint Resistant Stainless – PSE25KYHFS

ENERGY STAR UFAS COMPLIANT

SIDE-BY-SIDE REFRIGERATORS





Model shown in Black Stainless

GSS25IEN

GE 25.1 CU. FT. REFRIGERATOR

- Showcase LED lighting
- Edge-to-edge shelves
- Hidden hinges
- Interior storage drawers
- Glass freezer shelves
- Clear door shelves
- External dispenser
- Easy-access icemaker
- Advanced water filtration

Fingerprint Resistant Stainless – GSS25IYNFS
Slate – GSS25IMNES
Black Slate – GSS25IENDS
White – GSS25IGNWW
Black – GSS25IGNBB

UFAS COMPLIANT





GSS23HSH

GE 23.2 CU. FT. REFRIGERATOR

- 32-3/4" wide
- LED lighting
- **Clear door bins**
- **Glass freezer shelves**
- Integrated shelf-support system
- Adjustable, slide-out spillproof glass shelves
- Fresh-food multi-level drawers
- Adjustable large door bins
- Arctica icemaker
- Advanced water filtration uses XWFE replacement filter

Stainless – GSS23HSHSS

UFAS COMPLIANT





GSE25GSH

GE 25.3 CU. FT. REFRIGERATOR

- LED lighting
- Integrated shelf-support system
- Adjustable, slide-out spillproof glass shelves
- Fresh-food multi-level drawers
- Adjustable large door bins
- Arctica icemaker
- Advanced water filtration uses XWFE replacement filter

Stainless – GSE25GSHSS
High-gloss White – GSE25GGHWW
High-gloss Bisque – GSE25GGHCC
High-gloss Black – GSE25GGHBB

ENERGY STAR UFAS COMPLIANT

NON-ENERGY STAR® MODELS

Stainless – GSS25GSHSS
Slate – GSS25GMHES
High-gloss White – GSS25GGHWW
High-gloss Black – GSS25GGHBB

UFAS COMPLIANT





GSE23GSK

GE 23.2 CU. FT. REFRIGERATOR

- LED lighting
- Integrated shelf-support system
- Adjustable, slide-out, spillproof glass shelves
- Fresh-food multi-level drawers
- Adjustable door bins
- Arctica icemaker
- Advanced water filtration uses XWFE replacement filter

Stainless – GSE23GSKSS
White – GSE25GGKWW
Black – GSE23GGKBB
Bisque – GSE23GGKCC

ENERGY STAR UFAS COMPLIANT

NON-ENERGY STAR MODELS

Stainless – GSS23GSKSS
Slate – GSS23GMKES
White – GSS23GGKWW
Black – GSS23GGKBB

UFAS COMPLIANT

Complete features and specifications on page 287.
See page 277 for Accessibility Requirements.
Bold = feature upgrade from previous model.
For definitions of logos, see page 9.



BUILT-IN SIDE-BY-SIDE REFRIGERATORS

FEATURE HIGHLIGHTS



LED LIGHTING

Illuminates the fresh-food and freezer compartments, vegetable drawer and climate-controlled drawers to spotlight food without compromising space.



INTEGRATED DISPENSER WITH LED LIGHTING

Precise settings take the guesswork out of adjusting your refrigerator.



CLIMATE-CONTROLLED DRAWER

Alter your drawer's internal temperature to suit the food inside, using one of three temperature settings: Meat, Produce or Citrus.

P GE Profile™ G GE Appliances

Not all features available on all models.

BUILT-IN SIDE-BY-SIDE REFRIGERATORS





PSB48YSN

GE PROFILE™ 28.7 CU. FT. SMART REFRIGERATOR

- 48" built-in configuration
- Integrated dispenser with LED lighting
- LED lighting
- Climate-controlled drawer
- Built-In WiFi powered by SmartHQ™
- Fresh-food multi-level drawers
- Adjustable spillproof glass shelves
- Large door bins

Stainless – PSB48YSNSS





PSB42YSN

GE PROFILE 24.5 CU. FT. SMART REFRIGERATOR

- 42" built-in configuration
- Integrated dispenser with LED lighting
- LED lighting
- Climate-controlled drawer
- Built-In WiFi powered by Smart HQ
- Fresh-food multi-level drawers
- Adjustable spillproof glass shelves
- Large door bins

Stainless – PSB42YSNSS

*SmartHQ Connect Module is required and sold separately. It is available for order on geappliances.com, part number PBX23W00Y0.
Complete features and specifications on pages 284.
See page 277 for Accessibility Requirements.
For definitions of logos, see page 9.



TOP-FREEZER REFRIGERATORS

FEATURE HIGHLIGHTS



#1 IN QUALITY AND DEPENDABILITY*

Among 16-22 cu. ft. refrigerators based on an independent study of property maintenance personnel.



LED LIGHTING

Spotlights foods inside, making them easy to see.



PREMIUM INNER DOOR

Enjoy greater flexibility and organizational options right on the door with modular door bins.



GARAGE-READY

Our 19 and 22 cu. ft. Top-Freezers with Dual Controls are proven to perform at room temperatures ranging between 38°F to 110° F.



ADJUSTABLE GLASS FREEZER SHELF

Enjoy a high-end appearance with secure storage for a variety of items.



GLOSS FINISH

Make your kitchen shine with a polished finish that stands out in any setting.

MADE IN AMERICA

70 to 90% U.S. Content



SLIDING DELI BIN

Enjoy greater flexibility in your fridge and easily create more space for tall items with an innovative drawer that can be positioned wherever you prefer.



EDGE-TO-EDGE GLASS SHELVES

Enjoy a polished look and easy-access cleaning with edge-to-edge glass shelves that extend the full width of the refrigerator.

P GE Profile™ G GE Appliances

Not all features available on all models.
*Source: The Stevenson Company, 2020— Market research company with over 20 years of experience in the appliance industry.

TOP-FREEZER REFRIGERATORS





Model shown in White

GTS22KGN

GE 21.9 CU. FT. REFRIGERATOR

- Fits 33" openings
- #1 in Quality and Dependability*
- **Garage-ready****
- Premium inner door
- LED lighting
- Edge-to-edge glass shelves
- Adjustable glass freezer shelf
- High-gloss finish
- Upfront temperature controls

Stainless – GTS22KSNRSS
Slate – GTS22KMNRES
Black Slate – GTS22KMNRDS
White – GTS22KGNRWW
Black – GTS22KGNRBB





Model shown in Slate

GIE22JTN

GE 21.9 CU. FT. REFRIGERATOR

- Fits 33" openings
- #1 in Quality and Dependability*
- Premium inner door
- LED lighting
- Edge-to-edge glass shelves
- Sliding deli drawer
- Adjustable wire freezer shelf
- Factory-installed icemaker
- Upfront temperature controls

Slate – GIE22JMNRES





Model shown in White

GIE21GTH

GE 21.1 CU. FT. REFRIGERATOR

- Fits 33" openings
- #1 in Quality and Dependability*
- Upfront temperature controls
- Adjustable spill-resistant glass shelves
- Snack drawer
- Adjustable-humidity drawers
- Factory-installed icemaker
- Wire freezer shelf
- Spillproof freezer floor

Stainless – GIE21GSHSS
White – GIE21GTHWW
Black – GIE21GTHBB

Complete features and specifications on pages 288-292.
See page 277 for Accessibility Requirements.
Bold = feature upgrade from previous model.
For definitions of logos, see page 9.

*Among 14–18 cu. ft. refrigerators based on an independent study of property maintenance personnel. Source: The Stevenson Company, 2020—Market research company with over 20 years of experience in the appliance industry.
**Tested to perform from 38° to 110° F.





GTE22JSN

GE 21.9 CU. FT. REFRIGERATOR

- Fits 33" openings
- #1 in Quality and Dependability*
- Premium inner door
- LED lighting
- Edge-to-edge glass shelves
- Sliding deli drawer
- Adjustable wire freezer shelf
- Upfront temperature controls

Slate – GTE22JMNRES





GTE21GSH

GE 21.1 CU. FT. REFRIGERATOR

- Fits 33" openings
- #1 in Quality and Dependability*
- Upfront temperature controls
- Adjustable spill-resistant glass shelves
- Snack drawer
- Adjustable-humidity drawers
- Large door bins
- Wire freezer shelf
- Spillproof freezer floor

Stainless – GTE21GSHSS
White – GTE21GTHWW
Bisque – GTE221GTHCC
Black – GTE21GTHBB



Model shown in White



GTS19KGN

GE 19.1 CU FT REFRIGERATOR

- Fits 30" openings
- #1 in Quality and Dependability*
- **Garage-ready****
- Premium inner door
- LED lighting
- Edge-to-edge glass shelves
- Adjustable glass freezer shelf
- High-gloss finish
- Upfront temperature controls

Stainless – GTS19KSNRSS
Slate – GTS19KMNRES
White – GTS19KGNRWW
Black – GTS19KGNRBB

TOP-FREEZER REFRIGERATORS



GIE19JSN

GE 19.1 CU. FT. REFRIGERATOR

- Fits 30" openings
- #1 in Quality and Dependability*
- Premium inner door
- LED lighting
- Edge-to-edge glass shelves
- Sliding deli drawer
- Adjustable wire freezer shelf
- Factory-installed icemaker

Stainless – GIE19JSNRSS



Model shown in White

GTE19JTN

GE 19.1 CU. FT. REFRIGERATOR

- Fits 30" openings
- #1 in Quality and Dependability*
- Premium inner door
- LED lighting
- **Edge-to-edge glass shelves**
- **Sliding deli drawer**
- Adjustable wire freezer shelf
- Upfront temperature controls

Stainless – GTE19JSNRSS
White – GTE19JTNRWW
Black – GTE19JTNRBB



Model shown in White

GTE19DTN

GE 19.1 CU. FT. REFRIGERATOR

- Fits 30" openings
- #1 in Quality and Dependability*
- LED lighting
- Adjustable wire shelves
- Upfront temperature controls
- High-gloss handles
- **Premium inner door**

White – GTE19DTNRWW
Black – GTE19DTNRBB

Complete features and specifications on pages 288-292.
See page 277 for Accessibility Requirements.
Bold = feature upgrade from previous model.
For definitions of logos, see page 9.

*Among 14–18 cu. ft. refrigerators based on an independent study of property maintenance personnel. Source: The Stevenson Company, 2020—Market research company with over 20 years of experience in the appliance industry.



Model shown in White

GTS18HGN

GE 17.5 CU. FT. REFRIGERATOR

- #1 in Quality and Dependability*
- **Gloss finish**
- LED lighting
- **Glass freezer shelf**
- Sliding deli drawer
- Edge-to-edge glass shelves

Stainless – GTS18HSNRSS
Slate – GTS18HMNRES
High-gloss White – GTS18HGNRWW
High-gloss Black – GTS18HGNRBB



Model shown in White

GIE18GTN

GE 17.5 CU. FT. REFRIGERATOR

- #1 in Quality and Dependability*
- LED lighting
- Edge-to-edge glass shelves
- Sliding deli drawer
- Adjustable wire freezer shelf
- Upfront temperature controls
- Factory-installed icemaker

Stainless – GIE18GSNRSS
Silver – GIE18GCNRSA
White – GIE18GTNRWW
Black – GIE18GTNRBB



GTE18GSN

GE 17.5 CU. FT. REFRIGERATOR

- #1 in Quality and Dependability*
- LED lighting
- Edge-to-edge glass shelves
- Sliding deli drawer
- Adjustable wire freezer shelf
- Upfront temperature controls

Stainless – GTE18GSNRSS
Slate – GTE18GMNRES
White – GTE18GTNRWW
Bisque – GTE18GTNRBB
Black – GTE18GTNRCC

TOP-FREEZER REFRIGERATORS





Model shown in White

GTS18GTN

GE 17.5 CU. FT. REFRIGERATOR

- #1 in Quality and Dendability*
- LED lighting
- **Edge-to-edge glass shelves**
- **Sliding deli drawer**
- Adjustable wire freezer shelf
- Upfront temperature controls

Stainless – GTS18GSNRSS
White – GTS18GTNRWW
Black – GTS18GTNRBB





Model shown in White

GIE18DTN

GE 17.5 CU. FT. REFRIGERATOR

- #1 in Quality and Dendability*
- LED lighting
- Adjustable wire shelves
- **Factory-installed icemaker**

White – GIE18DTNRWW
Black – GIE18DTNRBB





GTE18DCN

GE 17.5 CU. FT. REFRIGERATOR

- #1 in Quality and Dendability*
- LED lighting
- Adjustable wire shelves
- Upfront temperature controls
- High-gloss handles

Silver – GTE18DCNRSA
White – GTE18DTNRWW
Black – GTE18DTNRBB

Complete features and specifications on pages 288-292.
See page 277 for Accessibility Requirements.
Bold = feature upgrade from previous model.
For definitions of logos, see page 9.

*Among 14–18 cu. ft. refrigerators based on an independent study of property maintenance personnel. Source: The Stevenson Company, 2020—Market research company with over 20 years of experience in the appliance industry.





Model shown in White

GTS18DTN

GE 17.5 CU. FT. REFRIGERATOR

- #1 in Quality and Dendability*
- LED lighting
- Adjustable wire shelves
- Upfront temperature controls
- High-gloss handles

White – GTS18DTNRWW
Black – GTS18DTNRBB





GIE17GSN

GE 16.6 CU. FT. REFRIGERATOR

- #1 in Quality and Dendability*
- LED lighting
- Sliding deli drawer
- Edge-to-edge glass shelves
- Adjustable wire freezer shelf
- Factory-installed icemaker

Stainless – GIE17GSNRSS





GTE17GSN

GE 16.6 CU. FT. REFRIGERATOR

- #1 in Quality and Dendability*
- LED lighting
- Sliding deli drawer
- Edge-to-edge glass shelves
- Adjustable wire freezer shelf
- Upfront temperature controls

Stainless – GTE17GSNRSS
White – GTE17GTNRWW
Black – GTE17GTNRBB

TOP-FREEZER REFRIGERATORS



Model shown in White

GTS17GTN

GE 16.6 CU. FT. REFRIGERATOR

- #1 in Quality and Dependability*
- LED lighting
- **Sliding deli drawer**
- **Edge-to-edge glass shelves**
- Adjustable wire freezer shelf
- Upfront temperature controls

Stainless – GTS17GSNRSS
White – GTS17GTNRWW

ADA COMPLIANT UFAS COMPLIANT



Model shown in White

GPE17CTN

GE 16.6 CU. FT. RECESSED-HANDLE REFRIGERATOR

- #1 in Quality and Dependability*
- LED lighting
- Pocket handles
- Adjustable wire shelves

White – GPE17CTNRWW

ENERGY STAR ADA COMPLIANT UFAS COMPLIANT



Model shown in White

GTE17DTN

GE 16.6 CU. FT. REFRIGERATOR

- #1 in Quality and Dependability*
- LED lighting
- Adjustable wire shelves
- Upfront temperature controls
- High-gloss handles

White – GTE17DTNRWW
Bisque – GTE17DTNRCC
Black – GTE17DTNRBB

ENERGY STAR ADA COMPLIANT UFAS COMPLIANT

Complete features and specifications on pages 288-292.
See page 277 for Accessibility Requirements.
Bold = feature upgrade from previous model.
For definitions of logos, see page 9.



Model shown in White

GTS17DTN

GE 16.6 CU. FT. REFRIGERATOR

- #1 in Quality and Dependability*
- LED lighting
- Adjustable wire shelves
- Upfront temperature controls
- High-gloss handles

White – GTS17DTNRWW
Black – GTS17DTNRBB

ADA COMPLIANT UFAS COMPLIANT



Model shown in White

GTE16DTN

GE 15.6 CU. FT. REFRIGERATOR

- #1 in Quality and Dependability*
- LED lighting
- Adjustable wire shelves
- Upfront temperature controls
- High-gloss handles

White – GTE16DTNRWW
(Right-hand door swing)
White – GTE16DTNLWW
(Left-hand door swing)
Bisque – GTE16DTNRCC

ENERGY STAR ADA COMPLIANT UFAS COMPLIANT

NON-ENERGY STAR® MODEL

White – GTS16DTNRWW

ADA COMPLIANT UFAS COMPLIANT





GPE12FSK

GE 11.6 CU. FT. REFRIGERATOR

- Fits 24" openings
- Equipped for optional icemaker
- LED lighting in fresh-food section
- Upfront electronic temperature controls
- 3 glass fresh-food shelves
- 2 clear freezer door bins
- 2 clear crisper drawers
- Wire freezer step-shelf
- Gallon door storage

Stainless – GPE12FSKSB
White – GPE12FGKWW
Black – GPE12FGKBB

ENERGY STAR ADA COMPLIANT UFAS COMPLIANT

*Among 14–18 cu. ft. refrigerators based on an independent study of property maintenance personnel. Source: The Stevenson Company, 2020—Market research company with over 20 years of experience in the appliance industry.

REFRIGERATOR WATER FILTERS



RPWFE

PREMIUM REPLACEMENT FILTER

- GE Appliances' most advanced filtration ever—industry-first filter to reduce Chloramine and Chlorine taste and odor for improved taste
- LeakDetect technology—filter communicates with refrigerator if leak is detected. Water is shut off to refrigerator with consumer notification on display
- GE guaranteed fit—Designed and tested specifically for use in select GE French-Door refrigerators***
- Tested and verified to reduce 8 trace pharmaceuticals, including ibuprofen, progesterone, atenolol, trimethoprim and fluoxetine*
- IAPMO certified to filter impurities such as PFOA/PFOS, BPA, cysts, lead, mercury, asbestos and select pesticides, chemicals and 50 other impurities
- PFOA/PFOS reduction reduces 99% of Perfluorooctanoic acid (PFOA) and Perfluorooctaine Sulfonate (PFOS)
- Rated Capacity: 170 gallons or 6 months**



XWFE

PREMIUM REPLACEMENT FILTER

- GE Appliances' most advanced filtration ever—filters Chloramine and Chlorine taste and odor for improved taste
- LeakDetect technology—filter communicates with refrigerator if leak is detected. Water is shut off to refrigerator with consumer notification on display
- GE guaranteed fit—Designed and tested specifically for use in select side-by-side and bottom-freezer refrigerators***
- Tested and verified to reduce 8 pharmaceuticals, including ibuprofen, progesterone, atenolol, trimethoprim and fluoxetine*
- IAPMO certified to filter impurities such as PFOA/PFOS, BPA, cysts, lead, mercury, asbestos and select pesticides, chemicals and 50 other impurities
- PFOA/PFOS reduction reduces 99% of Perfluorooctanoic acid (PFOA) and Perfluorooctaine Sulfonate (PFOS)
- Rated Capacity: 170 gallons or 6 months**
- XWFE replaces XWF. Compatible with all refrigerators using XWF



MWFP

PREMIUM REPLACEMENT FILTER

- GE guaranteed fit—Designed and tested specifically for use in select side-by-side and bottom-freezer refrigerators***
- Tested and verified to reduce 8 trace pharmaceuticals, including ibuprofen, progesterone, atenolol, trimethoprim and fluoxetine*
- IAPMO certified to filter impurities such as PFOA/PFOS, BPA, cysts, lead, mercury, asbestos and select pesticides,
- PFOA/PFOS reduction reduces 99% of Perfluorooctanoic acid (PFOA) and Perfluorooctaine Sulfonate (PFOS)
- Rated Capacity: 300 gallons or 6 months**

*The substances reduced by this filter are not necessarily in your water.
**Cartridge should be replaced every 6 months at a rated capacity, or sooner if a noticeable reduction in flow rate occurs.
***See your owner's manual or chart section of the catalog for the correct filter for your refrigerator. GE has not qualified non-GE-branded filters for use in GE refrigerators and there is no assurance that non-GE-branded filters meet GE's standards for quality, performance and reliability.
NSF (National Sanitation Foundation).



MSWF

REPLACEMENT FILTER

- GE guaranteed fit—Compatible with select GE side-by-side and bottom-freezer refrigerators***
- IAPMO certified to filter impurities such as lead, mercury, asbestos and select pesticides and chemicals
- IAPMO certified for structural performance and to filter chlorine taste and odor and particulates
- Rated Capacity: 300 gallons or 6 months**



GSWF

REPLACEMENT FILTER

- GE guaranteed fit—Designed and engineered specifically for use in select GE top-freezer and bottom-freezer refrigerators***
- IAPMO certified to filter impurities such as cysts, lead and select pesticides and chemicals
- IAPMO certified for structural performance and to filter chlorine taste and odor and particulates
- Rated Capacity: 750 gallons or 6 months**



AFPWF

AUTOFILL PITCHER WATER FILTER

- GE guaranteed fit—Compatible with select GE refrigerators with Autofill Pitchers
- IAPMO certified to filter chlorine taste and odor and particulates
- Rated Capacity: 170 gallons or 6 months**

GE filters are certified by IAPMO for contaminant reduction and structural performance. GE filters are proven to filter impurities from drinking water.

Certified by IAPMO to reduce†	RPWFE	XWFE	MWFP	MSWF	GSWF	AFPWF
Chlorine Taste and Odor	✔	✔	✔	✔	✔	✔
Chloramine	✔	✔				
PFOA/PFOS	✔	✔	✔			
Lead, Mercury	✔	✔	✔	✔	✔	
Cysts††	✔	✔	✔	✔	✔	
Particulate Chemicals (Benzene, p-Dichlorobenzene)	✔	✔	✔	✔		
Herbicides (Atrazine, 2, 4-D), Pesticide (Carbofluran)	✔	✔	✔	✔	Atrazine only	
Insecticides (Lindane, Toxaphene)	✔	✔	✔	✔	Lindane only	
Select Natural Deposits (Asbestos)	✔	✔	✔	✔		
Volatile Organic Compounds	✔	✔	✔			
Select Pharmaceuticals	✔	✔	✔			

†See performance data sheet for impurities reduction information by model. Not all filters reduce all impurities listed.
††Based on the use of Cryptosporidium parvum cysts.

LEARN MORE OR ORDER GE WATER FILTERS BY CALLING 800-851-6200.

TOP-FREEZER FILTRATION SYSTEMS

PRODUCTS BELOW AVAILABLE ONLY THROUGH PARTS ACCOUNT UNLESS NOTED.



GXRLQK

GE EXTERIOR REFRIGERATOR/ ICEMAKER FILTRATION SYSTEM

- Reduces lead, select pharmaceuticals, select VOCs, cysts, chlorine taste and odor and other contaminants
- **Filter installs directly to refrigerator water line for refrigerators without built-in filtration**
- 6-month filter life/150 gallons (varies with local water conditions)
- Twist and lock design - Provides for easy, tool-free, no-mess filter replacement
- **No water shutoff or tools needed to replace filters**
- Replacement filter: FQK1K

PREMIUM
ADVANCED
BASIC



GXRTDR

GE EXTERIOR REFRIGERATOR/ ICEMAKER FILTRATION SYSTEM

- Filter installs directly to refrigerator water line for refrigerators without built-in filtration
- 6-month filter life/2,500 gallons (varies with local water conditions)
- Water must be shut off to replace system

PREMIUM
ADVANCED
BASIC



GXRTLL

IN-LINE TOP-FREEZER REPLACEMENT FILTER

- Filter installs directly to refrigerator water line for refrigerators without built-in filtration
- 5-year filter life - Filter should be replaced every 5 years or 5,250 gallons for best filtration results (varies with local water conditions)
- Water must be shut off to replace system

PREMIUM
ADVANCED
BASIC

REFRIGERATION PARTS & ACCESSORIES







IM6D GE ICEMAKER KIT	**IM4D** GE ICEMAKER	**IM5D** GE ICEMAKER KIT
• Quickly install a new or replacement IM6 icemaker unit with an all-inclusive kit • Includes ice bucket, fill tube, water inlet valve, installation materials and hardware • Complete icemaker kit that will fit most GE refrigerators	• For use in most top-freezer refrigerators and some bottom-freezer refrigerators, please check the label on the back of your refrigerator to ensure compatibility	• For use in select French-Door bottom-freezer refrigerators • Quickly install a second icemaker in freezer section with an all-inclusive kit





PM08X10008 UNIVERSAL BRAIDED PEX WATER LINE	**WX08X10006**—8′ LENGTH UNIVERSAL PEX WATER LINE
• 8′ length for easily accessible installation • PEX inner tube for improved ice and water taste • Non-corrosive coating • 1/4″ inlet and outlet fittings • NSF certified (National Sanitation Foundation)	• Constructed of cross-linked reinforced polyethylene for greater durability • Flexible material resists kinking • Eliminates pitting and cracking for lasting performance • NSF certified • No need for solder or torch for installation **WX08X10002**—2′ length **WX08X10015**—15′ length **WX08X10025**—25′ length

SMARTCONNECT™ REFRIGERATOR TUBING KITS make it easy to install a water line for icemakers and dispensers on any applicable GE Appliances refrigerator.

COMPACT & UNDERCOUNTER REFRIGERATION

FEATURE HIGHLIGHTS

COMPACT REFRIGERATORS

ENERGY STAR® CERTIFIED

Meets or exceeds federal guidelines for energy efficiency for year-round energy and money savings.



GLASS SHELVES

Create convenient food storage with easy-to-clean shelves.



CAN RACKS

Quick and easy access to your favorite drinks.

WINE & BEVERAGE CENTERS



REVERSIBLE GLASS & WOOD SHELVES

Easily flip the shelves to accommodate different beverages. Use the wooden side for wine bottles and the glass side for cans and more.



SHOWCASE SHELF

Angle the shelf to store wine bottles on their side or display them with the labels showing so you can quickly find the one you want.



DUAL ZONE TEMPERATURE CONTROL

Two distinct zones maintain any temperature between 43 and 62° F, keeping red and white wines ready to serve.

ICE MAKERS



NUGGET ICE

Enhance specialty drinks, fill up water bottles more easily, and provide a base for chilled platters with nugget-style ice.



GOURMET CLEAR ICE

The primary flavor of a drink lasts longer when you use this ice maker's large, slow-melting, gourmet-style ice. Each distinctively clear cube has a solid, smooth texture.



BUILT-IN OR FREESTANDING CAPABLE

Allows for installation flexibility.

P GE Profile™ G GE Appliances

Not all features available on all models.

COMPACT REFRIGERATORS





GCE06G

GE 5.6 CU. FT. REFRIGERATOR

- Durability-tested compressor
- **Built-in or freestanding capability**
- Can rack
- **Interior lighting**
- **Clear crisper drawer**
- 2 glass shelves
- Manual defrost
- Fresh-food door shelves
- **2 mini ice trays**

Stainless – GCE06GSHSB
White – GCE06GGHWW
Black – GCE06GGHBB



Model shown in Black



GME04G

GE 4.4 CU. FT. REFRIGERATOR

- Durability-tested compressor
- Can rack
- Tall bottle door storage
- Recessed handle
- Manual defrost
- **3 glass shelves**
- Fresh-food door shelves
- Mini ice tray

CleanSteel™ – GME04GLKLB
White – GME04GGKWW
Black – GME04GGKBB





GDE03G

GE 3.1 CU. FT. DOUBLE-DOOR REFRIGERATOR

- Durability-tested compressor
- Separate freezer compartment
- Interior lighting
- Clear crisper drawer
- Glass shelves
- Built-In can rack
- Door shelves
- Reversible door swing

CleanSteel – GDE03GLKLB
White – GDE03GGKWW
Black – GDE03GGKBB

Complete features and specifications on page 294.
See page 277 for Accessibility Requirements.
Bold = feature upgrade from previous model.
For definitions of logos, see page 9.

ICE MAKERS



Gourmet clear ice



Shown with optional custom panel

UCC15NJII

15" GOURMET CLEAR ICE MAKER

- Up to 48 pounds of gourmet clear ice production per day
- Panel-ready*
- Large-capacity ice bin
- Interior LED lighting
- Clean indicator light
- Ice scoop
- Optional UPK3 drain pump kit
- Built-in or freestanding capability allows for installation flexibility
- Indoor or outdoor capability allows for flexible placement

Stainless



Nugget ice



Shown with optional GE Profile™ Stainless door panel model kit PIP70SS

UNC15NJII

15" NUGGET ICE MAKER

- Up to 56 pounds of nugget ice production per day
- Panel-ready*
- Large-capacity ice bin
- Interior LED lighting
- Clean indicator light
- Ice scoop
- Optional UPK3 drain pump kit
- Built-in or freestanding capability allows for installation flexibility
- Indoor or outdoor capability allows for flexible placement

Stainless

ICEMAKER FILTRATION SYSTEMS

PRODUCTS BELOW AVAILABLE ONLY THROUGH PARTS ACCOUNT UNLESS NOTED.



PREMIUM
ADVANCED
BASIC

GXRLQK

GE EXTERIOR REFRIGERATOR/ ICEMAKER FILTRATION SYSTEM

- Reduces lead, select pharmaceuticals, select VOCs, cysts, chlorine taste and odor and other contaminants
- **Filter installs directly to refrigerator water line for refrigerators without built-in filtration**
- 6-month filter life/150 gallons (varies with local water conditions)
- Twist and lock design—Provides for easy, tool-free, no-mess filter replacement
- **No water shutoff or tools needed to replace filters**
- Replacement filter: FQK1K



PREMIUM
ADVANCED
BASIC

GXRTDR

GE EXTERIOR REFRIGERATOR/ ICEMAKER FILTRATION SYSTEM

- Filter installs directly to refrigerator water line for refrigerators without built-in filtration
- 6-month filter life/2,500 gallons (varies with local water conditions)
- Water must be shut off to replace system

*Sold separately, required to complete installation.

WINE & BEVERAGE CENTERS



PWS06DSP

GE PROFILE™ 4.8 CU. FT. WINE CENTER

- **Modern design with stainless handle and glass door**
- **Dual zone temperature controls**
- 6 slide-out wine racks
- **44-bottle capacity**
- Freestanding or built-in capable
- Recessed LED lighting
- Digital temperature controls
- Door alarm

Stainless – PWS06DSPSS

ADA COMPLIANT UFAS COMPLIANT



GWS04HAE

GE 4.1 CU. FT. WINE CENTER

- 30-bottle capacity
- Stainless steel door with large glass window
- 5 wine racks
- Upfront electronic controls
- Interior lighting
- Built-in or freestanding capability
- Door lock with key

Stainless – GWS04HAESS

ADA COMPLIANT UFAS COMPLIANT



PVS06BSP

GE PROFILE 5.1 CU. FT. BEVERAGE CENTER

- Modern design with stainless handle and glass door
- **4 reversible glass and wood shelves**
- **Showcase shelf**
- **155-can or 52-bottle capacity**
- Freestanding or built-in capable
- Recessed LED lighting
- Digital temperature controls
- Door alarm

Stainless – PVS06BSPSS

ADA COMPLIANT UFAS COMPLIANT



GVS04BQN

GE 4.1 CU. FT. WINE & BEVERAGE CENTER

- 125-can/31-bottle capacity
- Stainless steel door with large glass window
- 3 adjustable, full-depth and 2 half-depth wooden racks
- Upfront electronic controls
- Interior lighting
- Built-in or freestanding capability
- Door lock with key

Stainless – GVS04BQNSS

ADA COMPLIANT UFAS COMPLIANT

Complete features and specifications on page 293.
See page 277 for Accessibility Requirements.
Bold = feature upgrade from previous model.
For definitions of logos, see page 9.



FREEZERS

FEATURE HIGHLIGHTS

UPRIGHT FREEZERS



GARAGE-READY

Our freezers are tested to perform from 0°F to 110°F.



HIGHEST-RATED LINEUP IN THE INDUSTRY

Based on aggregated ratings and review data from GEAppliances.com and leading retail websites.



AUDIBLE TEMP ALARM

Always know if the door is left ajar or the internal temperature rises.



GLASS SHELVES & CLEAR BINS

Enjoy more flexible storage and find items quickly with this clear slide-out bin.



LED LIGHTING

Quickly find any item with bright lights that automatically illuminate upon opening.



LOCK WITH KEY

Enjoy peace of mind knowing valuable food items are protected.

CHEST FREEZERS



GARAGE-READY

Our freezers are tested to perform from 0°F to 110°F.



HIGHEST-RATED LINEUP IN THE INDUSTRY

Based on aggregated ratings and review data from GEAppliances.com and leading retail websites.



SECOND-LEVEL RAIL

Conveniently access sliding baskets at different multiple heights in the freezer.

P GE Profile™ G GE Appliances

Not all features available on all models.

UPRIGHT FREEZERS



FUF21DLRWW

GE 21.3 CU. FT. FROST-FREE FREEZER

- Garage-ready**
- Audible temperature alarm
- **4 glass, 2 adjustable freezer shelves**
- Exterior electronic temperature control
- Turbo Freeze
- LED interior lighting
- Lock with key
- **4 full-width clear door bins**
- **3 clear freezer drawers**

White



FUF21SMRWW

GE 21.3 CU. FT. FROST-FREE UPRIGHT FREEZER

- Garage-ready**
- Audible temperature alarm
- 4 wire, 2 adjustable freezer shelves
- Exterior electronic temperature control
- Turbo Freeze
- LED interior lighting
- Lock with key
- 4 full-width opaque door bins
- 1 wire freezer basket

White



FUF17DLRWW

GE 17.3 CU. FT. FROST-FREE FREEZER

- Garage-ready**
- Audible temperature alarm
- **4 glass, 2 adjustable freezer shelves**
- Exterior electronic temperature control
- Turbo Freeze
- LED interior lighting
- Lock with key
- **4 full-width clear door bins**
- **3 clear freezer drawers**

White

Complete features and specifications on page 295.
Bold = feature upgrade from previous model.
For definitions of logos, see page 9.



FUF17SMRWW

GE 17.3 CU. FT. FROST-FREE UPRIGHT FREEZER

- Garage-ready**
- Audible temperature alarm
- 4 wire, 2 adjustable freezer shelves
- Exterior electronic temperature control
- Turbo Freeze
- LED interior lighting
- Lock with key
- 4 full-width opaque door bins
- 1 wire freezer basket

White



FUF14DLRWW

GE 14.1 CU. FT. FROST-FREE FREEZER

- Garage-ready**
- Audible temperature alarm
- **4 glass, 2 adjustable freezer shelves**
- Exterior electronic temperature control
- Turbo Freeze
- LED interior lighting
- Lock with key
- **4 full-width clear door bins**
- **3 clear freezer drawers**

White



FUF14SMRWW

GE 14.1 CU. FT. FROST-FREE UPRIGHT FREEZER

- Garage-ready**
- Audible temperature alarm
- 4 wire, 2 adjustable freezer shelves
- Exterior electronic temperature control
- Turbo Freeze
- LED interior lighting
- Lock with key
- 4 full-width opaque door bins
- 1 wire freezer basket

White

*The highest rated upright freezer lineup in the industry—based on aggregated data from GEA.com and leading retail websites.

**GE freezers are tested to perform from 0°F to 110°F.

CHEST FREEZERS



FCM22DLWW

GE 21.7 CU. FT. MANUAL DEFROST FREEZER

- Garage-ready**
- Audible temperature alarm
- Second level rail
- LED interior lighting
- Lock with key
- Power “On” light
- **5 sliding bulk storage baskets**
- **4 customizable dividers**
- Adjustable temperature control

White



FCM11PHWW

GE 10.6 CU. FT. MANUAL DEFROST FREEZER

- Garage-ready**
- Power “On” light
- **3 lift-out, sliding bulk storage baskets**
- Lock with key
- Adjustable temperature control
- **Interior lighting**

White



FCM16DLWW

GE 15.7 CU. FT. MANUAL DEFROST FREEZER

- Garage-ready**
- **Audible temperature alarm**
- **Second level rail**
- LED interior lighting
- Lock with key
- Power “On” light
- **4 sliding bulk storage baskets**
- Adjustable temperature control

White



FCM7SKWW

GE 7.0 CU. FT. MANUAL DEFROST FREEZER

- Garage-ready**
- Power “On” light
- **2 lift-out, sliding bulk storage baskets**
- Adjustable temperature control
- Recessed handles
- Upfront defrost water drain
- Manual defrost

White



FCM16SLWW

GE 15.7 CU. FT. MANUAL DEFROST CHEST FREEZER

- Garage-ready**
- **Hi Temp indicator light**
- 2 sliding bulk storage baskets
- **LED interior lighting**
- Lock with key

White



FCM5SKWW

GE 5.0 CU. FT. MANUAL DEFROST FREEZER

- **Garage-ready****
- **Power “On” light**
- 1 Lift-out, sliding bulk storage basket
- Adjustable temperature control
- Recessed handles
- Upfront defrost water drain
- Manual defrost

White

Complete features and specifications on page 295.
Bold = feature upgrade from previous model.
For definitions of logos, see page 9.

**GE freezers are tested to perform from 0°F to 110°F.

COOKING

Profile™

SPLENDID POSSIBILITIES

Cooking products from GE Appliances & GE Profile™ give homeowners total design flexibility, so they can configure their kitchen and cooking space exactly as they like.



PHP9036BMTS—See pg. 80.



PVM9005BLTS (microwave oven)—See pg. 137.
PGS930BPTS (slide-in gas range)—See pg. 114.



PTS7000BNTS—See pg. 70.

GE APPLIANCES



JTD5000ENES—See pg. 66.



JES1095BMTS—See pg. 143.



UVW8301SLS (hood)—See pg. 97.
JGP5030SLSS (cooktop)—See pg. 93.



JVM6175SKSS (microwave oven)—See pg. 138.
JGS760SPSS (slide-in gas range)—See pg. 115.



WALL OVENS

FEATURE HIGHLIGHTS



IN-OVEN COOKCAM™

Check in without checking out thanks to an in-oven camera that allows you to check the progress of your food remotely.



BUILT-IN WIFI POWERED BY SmartHQ™

Connect, control and manage your oven from anywhere with your smartphone or tablet.

Visit geappliances.com/connect to learn about apps that support this appliance.

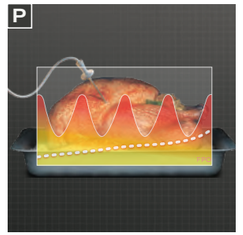

PRECISION COOKING MODES

This advanced technology prompts you with simple questions about what you're cooking, then automatically adjusts temperature and cook time for perfect results.



NO-PREHEAT AIR FRY

Achieve crispy, never greasy, fried food results in your oven without the oil.



BETTER WHEN CONNECTED

Ensure your oven always has the latest features, like new Air Fry modes, with downloadable software upgrades.



DIRECT AIR CONVECTION

Precise, top-down heating technology ensures delicious results when you cook chicken, roasts and more.



DEHYDRATE

Make homemade chips, spices and dried fruits with a high-capacity dehydrator within your oven.



NEVER-SCRUB, HEAVY-DUTY, SMOOTH-GLIDE RACKS

Engineered to glide seamlessly out of the oven even with heavy dishes, durable Never-Scrub roller racks can remain in the oven during self-clean cycle.

FIT GUARANTEE

Replacing a similar wall oven from GE Appliances or another brand? GE wall ovens are guaranteed for an exact fit or GE Appliances will pay up to $300 toward modifications.

See sales associate or geappliances.com for details.

P GE Profile™ G GE Appliances

Not all features available on all models.

BUILT-IN DOUBLE WALL OVENS



Model shown in Black Stainless

PTD9000

GE PROFILE™ 30" SMART CONVECTION DOUBLE OVEN

- **In-oven CookCam™**
- No-preheat air fry
- Built-in WiFi powered by SmartHQ™*
- Precision temperature probe
- Dehydrate Mode
- Precision cooking
- True European Convection with Direct Air (both)
- Brilliant Touch 7" Display
- **Soft-close door**
- Never-Scrub, heavy-duty smooth-glide roller racks (both)

Stainless - PTD9000SNSS
Black Stainless - PTD9000BNTS

Perfect Match Cooktops:
PHP9036 (Induction), PP7036 (Electric), PGP7036 (Gas)





PTD7000

GE PROFILE 30" SMART CONVECTION DOUBLE OVEN

- **No-preheat air fry**
- **Precision cooking**
- Built-in WiFi powered by SmartHQ*
- Precision temperature probe
- **True European Convection with Direct Air (both)**
- **Brilliant Touch 7" Display**
- **No-preheat options**
- Never-Scrub, heavy-duty, smooth-glide racks (both)
- Self-clean oven with optional Steam Clean (both)
- 10-pass hidden bake element

Stainless - PTD7000SNSS
Black Stainless - PTD7000BNTS

Perfect Match Cooktops:
PHP9036 (Induction), PP7036 (Electric),
PGP7036 (Gas)





PTD700L

GE PROFILE 30" SMART CONVECTION DOUBLE OVEN WITH LEFT-HAND SIDE-SWING DOORS

- **Swing door design**
- Precision cooking
- No-preheat air fry
- No-preheat options
- Built-in WiFi powered by SmartHQ*
- Brilliant Touch 7" Display
- True European Convection with Direct Air (upper)
- Never-Scrub, heavy-duty roller racks (both)
- Precision temperature probe
- Self-clean with Steam Clean option

Stainless - PTD700LSNSS

Perfect Match Cooktops:
PP7036 (Electric), PGP7036 (Gas)





PTD700R

GE PROFILE 30" SMART CONVECTION DOUBLE OVEN WITH RIGHT-HAND SIDE-SWING DOORS

- **Swing door design**
- Precision cooking
- No-preheat air fry
- No-preheat options
- Built-in WiFi powered by SmartHQ*
- Brilliant Touch 7" Display
- True European Convection with Direct Air (upper)
- Never-Scrub, heavy-duty roller racks (both)
- Precision temperature probe
- Self-clean with Steam Clean option

Stainless - PTD700RSNSS

Perfect Match Cooktops:
PP7036 (Electric), PGP7036 (Gas)

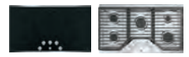

*See page 296 for WiFi-enabled features.
Complete features and specifications on page 296.
See page 316 for approved cooktop and wall oven combinations.

Bold = feature upgrade from previous model.
For definitions of logos, see page 9.

BUILT-IN DOUBLE WALL OVENS



Model shown in Black Slate

JTD5000

GE 30" SMART CONVECTION DOUBLE OVEN

- **True European Convection (upper)**
- Built-in WiFi powered by SmartHQ™
- **Precision temperature probe**
- Self-clean oven with optional Steam Clean (both)
- **Never-Scrub, heavy-duty, smooth-glide racks**
- **Hidden backlit LCD control**
- 10-pass hidden bake element
- 8-pass broil element
- Scan-to-cook
- Voice control

Stainless - JTD5000SNSS
Slate - JTD5000ENES
Black Slate - JTD5000FNDS
White - JTD5000DNWW
Black - JTD5000DNBB

Perfect Match Cooktops:
JP5030 (Electric), JGP5030 (Gas)





Model shown in Slate

JTD3000

GE 30" SMART DOUBLE OVEN

- **Never-Scrub, heavy-duty racks**
- Self-clean oven with optional Steam Clean (both)
- **Built-in WiFi powered by SmartHQ**
- Scan-to-cook
- Voice control
- **Glass touch controls**
- 10-pass hidden bake element
- 8-pass broil element

Stainless - JTD3000SNSS
Slate - JTD3000ENES
White - JTD3000DNWW
Black - JTD3000DNBB

Perfect Match Cooktops:
JP3030 (Electric), JGP3030 (Gas)





PKD7000

GE PROFILE™ 27" SMART CONVECTION DOUBLE OVEN

- **Brilliant Touch 7" LCD Control**
- True European Convection (upper)
- Built-in WiFi powered by SmartHQ*
- Never-Scrub, heavy-duty, smooth-glide racks (both)
- Precision temperature probe
- 10-pass hidden bake element
- 8-pass broil element
- Self-clean oven with optional Steam Clean (both)

Stainless - PKD7000SNSS
Black Stainless - PKD7000BNTS

Perfect Match Cooktops:
PP7036 (Electric), PGP7036 (Gas)

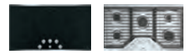



JKD5000

GE 27" SMART CONVECTION DOUBLE OVEN

- **True European Convection (upper)**
- **Hidden backlit LCD control**
- **Never-Scrub, heavy-duty, smooth-glide racks**
- **Precision temperature probe**
- Self-clean oven with optional Steam Clean (both)
- Built-in WiFi powered by SmartHQ
- 10-pass hidden bake element
- 8-pass broil element
- Scan-to-cook
- Voice control

Stainless - JKD5000SNSS
Slate - JKD5000ENES
White - JKD5000DNWW
Black - JKD5000DNBB

Perfect Match Cooktops:
JP5030 (Electric), JGP5030 (Gas)



*See pages 296–297 for WiFi-enabled features.
Complete features and specifications on pages 296–297.
See page 316 for approved cooktop and wall oven combinations.

Bold = feature upgrade from previous model.
For definitions of logos, see page 9.

BUILT-IN DOUBLE WALL OVENS



JKD3000

GE 27" SMART DOUBLE OVEN

- **Never-Scrub, heavy-duty racks (both)**
- Self-clean oven with optional Steam Clean (both)
- **Built-in WiFi powered by SmartHQ™**
- Glass touch controls
- 10-pass hidden bake element
- 8-pass broil element
- Scan-to-cook
- Voice control

Stainless - JKD3000SNSS
White - JKD3000DNWW
Black - JKD3000DNBB

Perfect Match Cooktops:
JP3030 (Electric), JGP3030 (Gas)



JRP28

GE 24" DOUBLE OVEN

- Self-clean oven (upper)
- Electronic oven controls
- Clear view window
- Interior oven light
- Two oven racks (both)
- Multiple oven rack positions

Stainless – JRP28SKSS
Black – JRP28BJBB

Perfect Match Cooktops:
JP3030 (Electric), JGP3030 (Gas)



Complete features and specifications on pages 297–300.
See page 316 for approved cooktop and wall oven combinations.
Bold = feature upgrade from previous model.
For definitions of logos, see page 9.

BUILT-IN COMBINATION DOUBLE WALL OVENS



PT9800

GE PROFILE™ 30" DOUBLE OVEN WITH ADVANTIUM® TECHNOLOGY

- **Speedcook oven 120V (upper)**
- **Multiple cooking functions**
- **Halogen heat (upper)**
- **Over 175 preprogrammed menu selections (upper)**
- True European Convection (lower)
- Self-clean with Steam Clean option (lower)
- Self-clean, heavy-duty roller rack (lower)
- Glass touch controls

Stainless – PT9800SHSS

Perfect Match Cooktops:
PP9030 (Electric), PGP9030 (Gas)

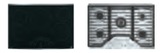



Model shown in Slate

PT7800

GE PROFILE 30" DOUBLE OVEN WITH CONVECTION

- 1.7 cu. ft. microwave capacity
- 1,000 watts (IEC-705 test procedure)
- **Convection microwave (upper)**
- 16" turntable (upper)
- **True European Convection (lower)**
- Self-clean with Steam Clean option (lower)
- **Self-clean, heavy-duty roller rack (lower)**
- Glass touch controls

Stainless – PT7800SHSS
Slate – PT7800EKES
White – PT7800DHWW
Black – PT7800DHBB

Perfect Match Cooktops:
PP7030 (Electric), PGP7030 (Gas)





PK7800

GE PROFILE 27" DOUBLE OVEN

- 1.7 cu. ft. microwave capacity
- 1,000 watts (IEC-705 test procedure)
- **Convection microwave (upper)**
- 16" turntable (upper)
- **True European Convection (lower)**
- Self-clean with Steam Clean option (lower)
- **Self-clean, heavy-duty roller rack (lower)**
- Glass touch controls

Stainless – PK7800SKSS
Slate – PK7800EKES

Perfect Match Cooktops:
PP7030 (Electric), PGP7030 (Gas)





JT3800

GE 30" DOUBLE OVEN

- 1.7 cu. ft. microwave capacity
- 1,000 watts (IEC-705 test procedure)
- Sensor cooking controls (upper)
- 16" turntable (upper)
- Self-clean with Steam Clean option (lower)
- Self-clean, heavy-duty oven racks (lower)

Stainless – JT3800SHSS
Black – JT3800DHBB

JK3800 (not shown)

GE 27" DOUBLE OVEN

Similar to the JT3800, except 27" wide.

Stainless – JK3800SHSS
White – JK3800DHWW
Black – JK3800DHBB

Perfect Match Cooktops:
JP3030 (Electric), JGP3030 (Gas)



BUILT-IN SINGLE WALL OVENS



PTS9000

GE PROFILE™ 30" SMART CONVECTION SINGLE OVEN

- In-oven CookCam™
- No-preheat air fry
- Built-in WiFi powered by SmartHQ™*
- Precision temperature probe
- Dehydrate Mode
- Precision cooking
- True European Convection with Direct Air
- Brilliant Touch 7" Display
- Soft-close door
- Never-Scrub, heavy-duty smooth glide roller racks

Stainless - PTS9000SNSS
Black Stainless - PTS9000BNTS

Perfect Match Cooktops:
PHP9036 (Induction), PP7036 (Electric), PGP7036 (Gas)





Model shown in Black Stainless

PTS7000

GE PROFILE 30" SMART CONVECTION SINGLE OVEN

- **No-preheat air fry**
- **Precision cooking**
- Built-in WiFi powered by SmartHQ*
- Precision temperature probe
- **True European Convection with Direct Air**
- **Brilliant Touch 7" Display**
- **No-preheat options**
- Never-Scrub, heavy-duty, smooth-glide racks
- Self-clean oven with optional Steam Clean
- 10-pass hidden bake element

Stainless - PTS7000SNSS
Black Stainless - PTS7000BNTS

Perfect Match Cooktops:
PHP9036 (Induction), PP7036 (Electric), PGP7036 (Gas)





JTS5000

GE 30" SMART CONVECTION SINGLE OVEN

- True European Convection
- Built-in WiFi powered by SmartHQ
- Precision temperature probe
- Self-clean oven with optional Steam Clean
- Never-Scrub, heavy-duty, smooth-glide racks
- **Hidden backlit LCD control**
- 10-pass hidden bake element
- 8-pass broil element
- Scan-to-cook
- Voice control

Stainless - JTS5000SNSS
Slate - JTS5000ENES
Black Slate - JTS5000FNDS
White - JTS5000DNWW
Black - JTS5000DNBB

Perfect Match Cooktops:
JP5030 (Electric), JGP5030 (Gas)





JTS3000

GE 30" SMART SINGLE OVEN

- **Never-Scrub, heavy-duty racks**
- Self-clean oven with optional Steam Clean
- **Built-in WiFi powered by SmartHQ**
- Glass touch controls
- Scan-to-cook
- Voice control
- 10-pass hidden bake element
- 8-pass broil element

Stainless - JTS3000SNSS
Slate - JTS3000ENES
White - JTS3000DNWW
Black - JTS3000DNBB

Perfect Match Cooktops:
JP3030 (Electric), JGP3030 (Gas)





PTS700L

GE PROFILE 30" SMART CONVECTION SINGLE OVEN WITH LEFT-HAND SIDE-SWING DOOR

- **Swing door design**
- Precision cooking
- No-preheat air fry
- No-preheat options
- Built-in WiFi powered by SmartHQ*
- Brilliant Touch 7" Display
- True European Convection with Direct Air
- Never-Scrub, heavy-duty roller racks
- Precision temperature probe
- Self-clean with Steam Clean option rack

Stainless - PTS700LSNSS

Perfect Match Cooktops:
PP7036 (Electric), PGP7036 (Gas)





PTS700R

GE PROFILE 30" SMART CONVECTION SINGLE OVEN WITH RIGHT-HAND SIDE-SWING DOOR

- **Swing door design**
- Precision cooking
- No-preheat air fry
- No-preheat options
- Built-in WiFi powered by SmartHQ*
- Brilliant Touch 7" Display
- True European Convection with Direct Air
- Never-Scrub, heavy-duty roller racks
- Precision temperature probe
- Self-clean with Steam Clean option

Stainless - PTS700RSNSS

Perfect Match Cooktops:
PP7036 (Electric), PGP7036 (Gas)





PKS7000

GE PROFILE 27" SMART CONVECTION SINGLE OVEN

- **Brilliant Touch 7" Display**
- True European Convection
- Built-in WiFi powered by SmartHQ*
- Never-Scrub, heavy-duty, smooth-glide racks
- Precision temperature probe
- 10-pass hidden bake element
- 8-pass broil element
- Self-clean oven with optional Steam Clean

Stainless - PKS7000SNSS
Black Stainless - PKS7000BNTS

Perfect Match Cooktops:
PP7036 (Electric), PGP7036 (Gas)

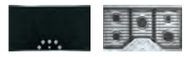



Model shown in Black

JKS5000

GE 27" SMART CONVECTION SINGLE OVEN

- True European Convection
- **Hidden backlit LCD control**
- Never-scrub, heavy-duty, smooth-glide racks
- Precision temperature probe
- Never-Scrub, heavy-duty racks
- Self-clean oven with optional Steam Clean
- Built-in WiFi powered by SmartHQ
- 10-pass hidden bake element
- 8-pass broil element
- Scan-to-cook
- Voice control

Stainless - JKS5000SNSS
Slate - JKS5000ENES
White - JKS5000DNWW
Black - JKS5000DNBB

Perfect Match Cooktops:
JP5030 (Electric), JGP5030 (Gas)



*See pages 301 and 303 for WiFi-enabled features.
Complete features and specifications on pages 301–303.
See page 316 for approved cooktop and wall oven combinations.
See page 277 for Accessibility Requirements.

Bold = feature upgrade from previous model.
For definitions of logos, see page 9.

BUILT-IN SINGLE WALL OVENS



JKS3000

GE 27" SMART SINGLE OVEN

- **Never-Scrub, heavy-duty racks**
- Self-clean oven with optional Steam Clean
- **Built-in WiFi powered by SmartHQ™***
- Glass touch controls
- 10-pass hidden bake element
- 8-pass broil element
- Scan-to-cook
- Voice control

Stainless - JKS3000SNSS
White - JKS3000DNWW
Black - JKS3000DNBB

Perfect Match Cooktops:
JP3030 (Electric), JGP3030 (Gas)





JRP20

GE 24" ELECTRIC SINGLE OVEN

- Self-clean oven
- Electronic oven controls
- Clear view window
- Interior oven light
- Two oven racks

Stainless – JRP20SKSS
White – JRP20WJWW
Black – JRP20BJBB

JRS06 (not shown)

GE 24" SINGLE OVEN

Similar to the JRP20, except standard-clean oven.

Stainless – JRS06SKSS
Black – JRS06BJBB

Perfect Match Cooktops:
JP3030 (Electric), JGP3030 (Gas)





JGRP20

GE 24" GAS SINGLE OVEN

- Self-clean oven
- Electronic oven controls
- Clear view window
- Interior oven light
- Two oven racks

Stainless – JGRP20SENSS
White – JGRP20WEJWW
Black – JGRP20BEJBB

Perfect Match Cooktops:
JP3030 (Electric), JGP3030 (Gas)



*See pages 303–306 for WiFi-enabled features.
Complete features and specifications on pages 303-306.
See page 316 for approved cooktop and wall oven combinations.
See page 277 for Accessibility Requirements.
Bold = feature upgrade from previous model.
For definitions of logos, see page 9.

BUILT-IN TWIN FLEX WALL OVEN



PTS9200

GE PROFILE™ 30" SMART TWIN FLEX OVEN WITH CONVECTION

- Two-in-one oven
- **Built-in WiFi powered by SmartHQ***
- 5.0 cu. ft. total oven capacity (2.8 lower; 2.2. upper)
- True European Convection with Precise Air (lower oven)
- **Brilliant Touch 7" Display**
- Easy-glide, never-scrub, rack

Stainless – PTS9200SNSS

Perfect Match Cooktops:
PHP9030 (Induction), PGP9030 (Gas)

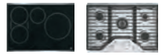

BUILT-IN WARMING DRAWERS



PTW9000

GE PROFILE 30" WARMING DRAWER

- Variable-temperature control
- Variable-humidity control
- Frameless drawer front
- "On" indicator light
- Half rack

Stainless – PTW9000SPSS

Perfect Match Wall Oven and Cooktops:
PTS7000 (Single), PHP9036 (Induction), PGP9036 (Gas)



PKW7000 (not shown)

GE PROFILE 27" WARMING DRAWER

Similar to PTW9000, except 27" wide.

Stainless – PKW7000SPSS



BUILT-IN WALL OVENS
WITH ADVANTIUM® TECHNOLOGY

FEATURE HIGHLIGHTS



SPEEDCOOK OVEN

Advantium cooking technology delivers oven-quality results two- to eight-times faster than a conventional oven.



MULTIPLE COOKING FUNCTIONS

Expand your cooking versatility with True European Convection, Sensor Microwave, Broil, Warming/Proofing Oven, and Precision Cook Oven.



175+ PREPROGRAMMED MENU SELECTIONS

Quickly find the selection you need with a menu that organizes dishes into 12 convenient categories.

P GE Profile™ G GE Appliances

Not all features available on all models.

BUILT-IN WALL OVENS WITH ADVANTIUM TECHNOLOGY



Model shown in Slate

PSB9240

GE PROFILE™ 30" SINGLE OVEN WITH ADVANTIUM TECHNOLOGY

- **Speedcook oven (240V)**
- Multiple cooking functions
- Halogen heat (no preheat required)
- Over 175 preprogrammed menu selections
- Custom Recipe Saver
- Allows use of UXB903SNSS storage drawer

Stainless – PSB9240SFSS
Black Stainless – PSB9240BLTS
Slate – PSB9240EFES



PSB9120

GE PROFILE 30" SINGLE OVEN WITH ADVANTIUM TECHNOLOGY

- Speedcook oven (120V)
- Multiple cooking functions
- Halogen heat (no preheat required)
- Over 175 preprogrammed menu selections
- Custom Recipe Saver
- Allows use of UXB903SNSS storage drawer
- Under-the-counter installation flexibility

Stainless – PSB9120SFSS
Black Stainless – PSB9120BLTS
Slate – PSB9120EFES



PSB9100

GE PROFILE 27" SINGLE OVEN WITH ADVANTIUM TECHNOLOGY

- Speedcook oven (120V)
- Multiple cooking functions
- Halogen heat (no preheat required)
- Over 175 preprogrammed menu selections
- Custom Recipe Saver

Stainless – PSB9100SFSS
Black Stainless – PSB9100BLTS
Slate – PSB9100EFES

ADVANTIUM PART & ACCESSORY

MODEL	UXB903SNSS GE PROFILE SPEEDCOOK OVEN STORAGE DRAWER
	• Provides convenient storage of Advantium cookware when not in use • Full-extension slides for easy access • Allows for retrofit into previous SCB2000/1 wall oven cutout
PSB9240	OPTIONAL UPGRADE
PSB9120	OPTIONAL UPGRADE

Complete features and specifications on page 307.



BUILT-IN MICROWAVE OVENS

FEATURE HIGHLIGHTS



COMBINATION FAST COOK

Combines microwave and radiant heat for speed.



STEAM COOK

Perfectly prepare your steamed favorites.



MY CYCLE

Create a custom cook-time setting, and with one touch, cook your favorite dish just the way you like.

P GE Profile™ G GE Appliances

Not all features available on all models.

BUILT-IN MICROWAVE OVENS



PWB7030

GE PROFILE™ 30" BUILT-IN 1.7 CU. FT. CAPACITY MICROWAVE OVEN

- 975 watts (IEC-705 test procedure) and 1,500 convection watts
- Combination Fast Cook setting
- Steam cook
- Glass touch controls
- My Cycle
- Warming and proofing oven
- 120 volts
- Convection rack

Stainless – PWB7030SLSS
Slate – PWB7030ELES



BUILT-IN CAPABLE

ADA COMPLIANT *

PEB9159

GE PROFILE 1.5 CU. FT. CAPACITY CONVECTION OVEN WITH AIR FRY

- Air Fry
- 1,000 watts (IEC-705 test procedure)
- Sensor cooking controls
- Warming oven
- **Optional built-in trim kit** (JX9152/JX9153)**
- Convection rack

Stainless – PEB9159SRSS
Slate – PEB9159ERES
White – PEB9159DRWW
Black – PEB9159DRBB



Shown with trim kit PEB9159SJSS



BUILT-IN CAPABLE

ADA COMPLIANT *

PEM31

GE PROFILE 1.1 CU. FT. CAPACITY SPACEMAKER® OVEN

- 800 watts (IEC-705 test procedure)
- **Optional built-in trim kit*** (JX827/JX830)**
- **Optional hanging kit† (JXA019K)**
- Sensor cooking controls
- Weight and time defrost
- Turntable on/off

Stainless – PEM31SFSS
Black Stainless – PEM31BMTS
Slate – PEM31EFES
Black Slate – PEM31FMDS
White – PEM31DFWW
Black – PEM31DFBB



Shown with trim kit PEM31SFSS



Model shown in Gray

PEB7227

GE PROFILE 30" BUILT-IN 2.2 CU. FT. CAPACITY SENSOR MICROWAVE OVEN

- 1,100 watts (IEC-705 test procedure)
- Weight and time defrost
- Extra-large 16" turntable
- Instant On controls
- Control lockout
- "Add 30 seconds" button
- Kitchen timer

STANDARD COMBINATIONS for PEB7227

IMPORTANT: A TRIM KIT IS REQUIRED AND MUST BE ORDERED SEPARATELY.

STAINLESS TRIM



PEB7227ANDD**
Dark gray microwave with Stainless trim kit
30" KIT: JX7230SLSS
27" KIT: JX7227SLSS

SLATE TRIM



PEB7227ANDD**
Dark gray microwave with Slate trim kit
30" KIT: JX7230ELES
27" KIT: JX7227ELES

WHITE TRIM



PEB7227DLWW
White microwave with White trim kit
30" KIT: JX7230DLWW
27" KIT: JX7227DLWW

BLACK STAINLESS TRIM



PEB7227ANDD**
Dark gray microwave with Black Stainless trim kit
30" KIT: JX7230BLTS
27" KIT: JX7227BLTS

BLACK SLATE TRIM



PEB7227ANDD**
Dark gray microwave with Black Slate trim kit
30" KIT: JX7230FMDS
27" KIT: JX7227FMDS

BLACK TRIM



PEB7227DLBB
Black microwave with Black trim kit
30" KIT: JX7230DLBB
27" KIT: JX7227DLBB

*Only applicable under ADA-compliant installation.
**PEB7227ANDD - Base model used with Stainless, Black Stainless, Slate and Black Slate trim kits.
***Optional trim kits available in 27" and 30" configurations, sold separately. Refer to pages 308-311 for installation options and model numbers.
†Optional undercabinet mounting kit sold separately. Refer to page 311 for installation options and model numbers.
See page 277 for Accessibility Requirements.
Complete features and specifications on pages 308-311. For definitions of logos, see page 9.



ELECTRIC COOKTOPS

FEATURE HIGHLIGHTS



BLACK STAINLESS FINISH

A Black Stainless cooktop finish creates a cutting-edge look in the kitchen.



GLIDE TOUCH CONTROLS

Precisely control heat with one swipe.



11" 3,700-WATT ELEMENT

Rapidly boil water with our most powerful induction element.

MULTI-ELEMENT TIMER

Manage up to five pans at once with individual timers for each element.

SYNCBURNERS

Control two 7" elements simultaneously to evenly heat large cookware or griddles.

POWER BOIL ELEMENT

Use different pan sizes on this single element that produces rapid, powerful heat.



BACKLIT KNOBS

Achieve a modern look with the convenience of knob control.



CONTROL LOCK CAPABILITY

Protect against unintended activation.

FIT GUARANTEE

Replacing a similar cooktop from GE Appliances or another brand? GE cooktops are guaranteed for an exact fit or GE Appliances will pay up to $100 toward modifications.

See sales associate or geappliances.com for details.

P GE Profile™ G GE Appliances

Not all features available on all models.

36" BUILT-IN INDUCTION COOKTOP

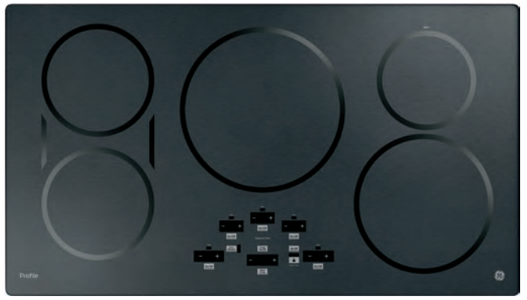

Model shown in Black Stainless

ADA COMPLIANT UFAS COMPLIANT

PHP9036

GE PROFILE™ 36" INDUCTION COOKTOP

- **Five induction elements**
- **Digital touch controls**
- **11" 3,700-watt Power Boil element**
- SyncBurners
- Kitchen timer
- Control lock capability
- **Pan presence & size sensor**
- Red LED with black glass surface
- Hot surface indicator lights
- Stainless steel-clad aluminum griddle—optional (JXGRIDL1)

Stainless – PHP9036SJSS
Black Stainless – PHP9036BMTS
Black – PHP9036DJBB

Perfect Match Wall Ovens: PTD9000 (Double), PTS9000 (Single)



30" BUILT-IN INDUCTION COOKTOP

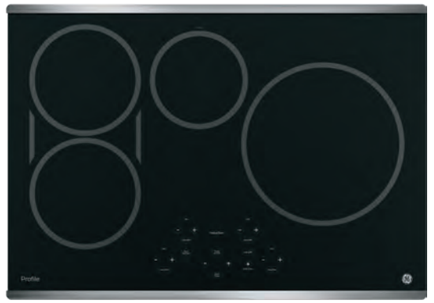

ADA COMPLIANT UFAS COMPLIANT

PHP9030

GE PROFILE 30" INDUCTION COOKTOP

- **Four induction elements**
- **Digital touch controls**
- **11" 3,700-watt Power Boil element**
- SyncBurners
- **Kitchen timer**
- Control lock capability
- **Pan presence & size sensor**
- Red LED with black glass surface
- Hot surface indicator lights
- Stainless steel-clad aluminum griddle—optional (JXGRIDL1)

Stainless – PHP9030SJSS
Black Stainless – PHP9030BMTS
Black – PHP9030DJBB

Perfect Match Wall Ovens: PTD9000 (Double), PTS9000 (Single)



Complete features and specifications on pages 312-313.
See page 87 for electric cooktop parts & accessories.
See page 316 for approved cooktop and wall oven combinations.
See page 277 for Accessibility Requirements.
Bold = feature upgrade from previous model.
For definitions of logos, see page 9.

36" BUILT-IN ELECTRIC COOKTOPS



ADA COMPLIANT UFAS COMPLIANT

PP9036

GE PROFILE 36" ELECTRIC COOKTOP

- Five radiant cooking elements
- **Glide touch controls**
- 12"/9"/6" Power Boil tri-ring element
- 8"/5" Power Boil dual-ring element
- SyncBurners
- **Multi-element timer**
- Control lock capability
- **Custom settings**
- Red LED with black glass surface
- Stainless steel-clad aluminum griddle—optional (JXGRIDL1)

Stainless – PP9036SJSS
Black – PP9036DJBB (Beveled-edge glass)

Perfect Match Wall Ovens: PTD9000 (Double), PTS9000 (Single)





Model shown in Black Stainless

ADA COMPLIANT UFAS COMPLIANT

PP7036

GE PROFILE 36" ELECTRIC COOKTOP

- Five radiant cooking elements
- 12"/9"/6" Power Boil tri-ring element
- 8"/5" Power Boil dual-ring element
- **SyncBurners**
- Keep warm setting
- Melt setting
- Control lock capability
- **Red LED backlit knobs with black glass surface**
- Hot surface indicator lights
- Cooktop "On" indicator light
- **Stainless steel-clad aluminum griddle—optional (JXGRIDL1)**

Stainless – PP7036SJSS
Black Stainless – PP7036BMTS
Black – PP7036DJBB

Perfect Match Wall Ovens: PTD7000 (Double), PTS7000 (Single)



36" BUILT-IN ELECTRIC COOKTOPS (CONTINUED)



ADA COMPLIANT UFAS COMPLIANT

JP5036

GE 36" ELECTRIC COOKTOP

- Five radiant cooking elements
- **Digital touch controls**
- **12"/9"/6" Power Boil tri-ring element**
- **8"/5" Power Boil dual-ring element**
- **Kitchen timer**
- Keep warm setting
- Melt setting
- Control lock capability
- **Red LED with black glass surface**
- Hot surface indicator lights

Stainless – JP5036SJSS
Black – JP5036DJBB

Perfect Match Wall Ovens: JTD5000 (Double), JTS5000 (Single)





Model shown in Black

ADA COMPLIANT UFAS COMPLIANT

JP3036

GE 36" ELECTRIC COOKTOP

- Five radiant cooking elements
- 12"/9" dual element
- 8"/5" Power Boil dual-ring element
- 6" fifth element warming zone
- Melt setting
- Hot surface indicator lights
- Cooktop "On" indicator light

Stainless – JP3036SLSS
True White – JP3036TLWW
Black – JP3036DLBB

Perfect Match Wall Ovens: JTD3000 (Double), JTS3000 (Single)





Model shown in White

ADA COMPLIANT UFAS COMPLIANT

JP3536

GE 36" ELECTRIC COOKTOP

- Five radiant cooking elements
- 12"/9" dual element
- **8"/5" Power Boil dual-ring element**
- Keep warm setting
- Melt setting
- **Control lock capability**
- Hot surface indicator lights
- Cooktop "On" indicator light

Stainless – JP3536SJSS
True White – JP3536TJWW
Black – JP3536DJBB

Perfect Match Wall Ovens: JTD3000 (Double), JTS3000 (Single)



30" BUILT-IN ELECTRIC COOKTOPS



ADA COMPLIANT UFAS COMPLIANT

PP9030

GE PROFILE™ 30" ELECTRIC COOKTOP

- Five radiant cooking elements
- **Glide touch controls**
- 9"/6" Power Boil dual-ring element
- 8"/5" dual-ring element
- SyncBurners
- **Multi-element timer**
- Control lock capability
- **Custom settings**
- **Red LED with black glass surface**
- Stainless steel-clad aluminum griddle—optional (JXGRIDL1)

Stainless – PP9030SJSS
Black – PP9030DJBB (Beveled-edge glass)

Perfect Match Wall Ovens: PTD9000 (Double), PTS9000 (Single)



Complete features and specifications on pages 312-313.
See page 87 for electric cooktop parts & accessories.
See page 316 for approved cooktop and wall oven combinations.
See page 277 for Accessibility Requirements.
Bold = feature upgrade from previous model.
For definitions of logos, see page 9.

30" BUILT-IN ELECTRIC COOKTOPS (CONTINUED)



ADA COMPLIANT UFAS COMPLIANT

PP7030

GE PROFILE™ 30" ELECTRIC COOKTOP

- **Five radiant cooking elements**
- 9"/6" Power Boil dual-ring element
- **8"/5" dual-ring element**
- **SyncBurners**
- Keep warm setting
- Melt setting
- Control lock capability
- **Red LED backlit knobs with black glass surface**
- Hot surface indicator lights
- Cooktop "On" indicator light
- Stainless steel-clad aluminum griddle—optional (JXGRIDL1)

Stainless – PP7030SJSS
Black Stainless – PP7030BMTS
Black – PP7030DJBB

Perfect Match Wall Ovens: PTD7000 (Double), PTS7000 (Single)





ADA COMPLIANT UFAS COMPLIANT

JP5030

GE 30" ELECTRIC COOKTOP

- Four radiant cooking elements
- **Digital touch controls**
- 9"/6" Power Boil dual-ring element
- **SyncBurners**
- **Kitchen timer**
- Keep warm setting
- Melt setting
- Control lock capability
- **Red LED with black glass surface**
- Hot surface indicator lights
- **Stainless steel-clad aluminum griddle—optional (JXGRIDL1)**

Stainless – JP5030SJSS
Black – JP5030DJBB

Perfect Match Wall Ovens: JTD5000 (Double), JTS5000 (Single)



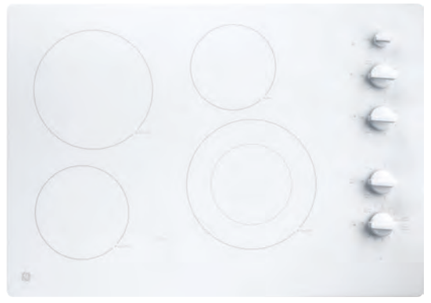

Model shown in White

ADA COMPLIANT UFAS COMPLIANT

JP3530

GE 30" ELECTRIC COOKTOP

- Four radiant cooking elements
- **9"/6" Power Boil dual-ring element**
- 8" Power Boil element
- Keep warm setting
- Melt setting
- **Control lock capability**
- Hot surface indicator lights
- Cooktop "On" indicator light

Stainless – JP3530SJSS
True White – JP3530TJWW
Black – JP3530DJBB

Perfect Match Wall Ovens: JTD3000 (Double), JTS3000 (Single)





ADA COMPLIANT UFAS COMPLIANT

JP3030

GE 30" ELECTRIC COOKTOP

- Four radiant cooking elements
- Two 8" Power Boil elements
- Keep warm setting
- Melt setting
- Hot surface indicator lights
- Cooktop "On" indicator light

Stainless – JP3030SJSS
True White – JP3030TJWW
Black – JP3030DJBB

Perfect Match Wall Ovens: JTD3000 (Double), JTS3000 (Single)



Complete features and specifications on page 313.
See page 87 for electric cooktop parts & accessories.
See page 316 for approved cooktop and wall oven combinations.
See page 277 for Accessibility Requirements.
Bold = feature upgrade from previous model.
For definitions of logos, see page 9.

30" BUILT-IN ELECTRIC DOWNDRAFT COOKTOP



ADA COMPLIANT UFAS COMPLIANT

PP9830

GE PROFILE™ 30" ELECTRIC DOWNDRAFT COOKTOP

- Four radiant cooking elements
- 9"/6" Power Boil dual-ring element
- Bridge element
- **Downdraft exhaust**
- Control lock capability
- Knob controls with ceramic-glass surface
- Hot surface indicator lights
- Cooktop "On" indicator light

Stainless – PP9830SJSS
White – PP9830TJWW
Black – PP9830DJBB

Perfect Match Wall Ovens: PTD7000 (Double), PTS7000 (Single)



21" BUILT-IN ELECTRIC COOKTOP



Model shown in Black

JP3021

GE 21" ELECTRIC COOKTOP

- Compact cooktop
- Ceramic-glass cooktop
- Ribbon heating elements
- 9"/6" dual element
- Melt setting

Black – JP3021DPBB

Perfect Match Wall Ovens: JRP28 (Double), JRP20 (Single)



Complete features and specifications on pages 314 and 317-318.
See page 87 for electric cooktop parts & accessories.
See page 316 for approved cooktop and wall oven combinations.
See page 277 for Accessibility Requirements.
Bold = feature upgrade from previous model.
For definitions of logos, see page 9.

ELECTRIC COOKTOPS PARTS & ACCESSORIES





MODEL	JXTR32B/W GE COOKTOP FILLER TRIM KIT	JXGRIDL1 STAINLESS STEEL-CLAD ALUMINUM GRIDDLE
		• Perfect accessory for electric ranges and cooktops with SyncBurners
PHP9036	–	OPTIONAL UPGRADE
PHP9030	OPTIONAL UPGRADE (JXTR32B)	OPTIONAL UPGRADE
PP9036	–	OPTIONAL UPGRADE
PP7036	–	OPTIONAL UPGRADE
JP5036	–	–
JP3536	–	–
JP3036	–	–
PP9030	OPTIONAL UPGRADE (JXTR32B)	OPTIONAL UPGRADE
PP7030	OPTIONAL UPGRADE (JXTR32B)	OPTIONAL UPGRADE
JP5030	OPTIONAL UPGRADE (JXTR32B)	OPTIONAL UPGRADE
JP3530	OPTIONAL UPGRADE (JXTR32B/W)	–
JP3030	OPTIONAL UPGRADE (JXTR32B/W)	–
PP9830	–	–
JP3021	–	–

ORDER GE PARTS AND ACCESSORIES BY CALLING 800-851-6200 OR ONLINE AT WWW.GEAPPLIANCEPARTS.COM BY USING GE PARTS ACCOUNT NUMBER.

GAS COOKTOPS

FEATURE HIGHLIGHTS



TRI-RING BURNER

Three-in-one burner is designed for accelerated boiling and gentle simmering.



EXTRA-LARGE, INTEGRATED COOKTOP GRIDDLE

Eliminate the need for extra cookware and enjoy a built-in cooking surface for pancakes, grilled cheeses and other favorites.



HEAVY-CAST, EDGE-TO-EDGE GRATES

A large, continuous cooking surface gives you extra room for pots and pans of all sizes and lets cookware move easily from burner to burner.



WHITE LED BACKLIT HEAVY-DUTY KNOBS

Durable knobs are backlit with white LED lighting that lends a sleek appearance and lets you know if burners are on.



MAX BURNER SYSTEM

Delivers the same maximum BTU power to propane and natural gas cooktops.



CONTROL LOCK CAPABILITY

Protects against unintended activation.



30" COOKTOP WITH 5 BURNERS

Enjoy ultimate cooktop flexibility and more cooking space with 5 sealed burners.



SEALED COOKTOP BURNERS

Contain spills and make cleaning quick and easy.



FIT GUARANTEE

Replacing a similar cooktop from GE Appliances or another brand? GE cooktops are guaranteed for an exact fit or GE Appliances will pay up to $100 toward modifications.

See sales associate or geappliances.com for details.

P GE Profile™ G GE Appliances

Not all features available on all models.

36" BUILT-IN GAS COOKTOPS



ADA COMPLIANT UFAS COMPLIANT

PGP9036

GE PROFILE™ 36" GAS COOKTOP

- Heavy-cast, edge-to-edge grates
- **18,000-BTU tri-ring burner**
- White LED backlit, heavy-duty knobs
- **Control lock capability**
- Precise Simmer burner
- Sealed cooktop burners
- Heavy-duty, dishwasher-safe grates
- Griddle included (JXGRIDL236)
- MAX burner system

Stainless – PGP9036SLSS

Perfect Match Wall Ovens: PTD9000 (Double), PTS9000 (Single)







ADA COMPLIANT UFAS COMPLIANT

PGP7036

GE PROFILE 36" GAS COOKTOP

- Heavy-cast, edge-to-edge grates
- **18,000-BTU Power Boil burner**
- **White LED backlit, heavy-duty knobs**
- Precise Simmer burner
- Sealed cooktop burners
- Heavy-duty, dishwasher-safe grates
- Optional griddle (JXGRIDL236)
- MAX burner system

Stainless – PGP7036SLSS

Black Stainless – PGP7036BMTS

Perfect Match Wall Ovens: PTD7000 (Double), PTS7000 (Single)







ADA COMPLIANT UFAS COMPLIANT

JGP5536

GE 36" GAS COOKTOP

- **Gas-on-glass cooktop**
- Sealed cooktop burners
- 15,000-BTU Power Boil burner
- Precise Simmer burner
- Continuous grates
- Control lock capability
- Dishwasher-safe grates and knobs

Stainless – JGP5536SLSS

Black – JGP5536DLBB

Perfect Match Wall Ovens: JTD5000 (Double), JTS5000 (Single)



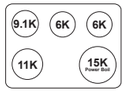



ADA COMPLIANT UFAS COMPLIANT

JGP5036

GE 36" GAS COOKTOP

- **Heavy-cast, edge-to-edge grates**
- Two 15,000-BTU Power Boil burners
- Precise Simmer burner
- Sealed cooktop burners
- Heavy-duty, dishwasher-safe grates
- **Optional griddle (JXGRIDL236)**
- MAX burner system

Stainless – JGP5036SLSS

Black – JGP5036DLBB

Perfect Match Wall Ovens: JTD5000 (Double), JTS5000 (Single)







ADA COMPLIANT UFAS COMPLIANT

JGP3036

GE 36" GAS COOKTOP

- 15,000-BTU Power Boil burner
- Precise Simmer burner
- Sealed cooktop burners
- Heavy-duty, dishwasher-safe grates
- Stainless steel, deep-recessed cooktop
- MAX burner system

Stainless – JGP3036SLSS

White – JGP3036DLWW

Black – JGP3036DLBB

Perfect Match Wall Ovens: JTD3000 (Double), JTS3000 (Single)



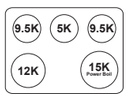

Complete features and specifications on pages 315-316.
See page 94 for gas cooktop parts & accessories.
See page 316 for approved cooktop and wall oven combinations.
See page 277 for Accessibility Requirements.
Bold = feature upgrade from previous model.
For definitions of logos, see page 9.

30" BUILT-IN GAS COOKTOPS



ADA COMPLIANT UFAS COMPLIANT

PGP9030

GE PROFILE™ 30" DEEP-RECESSED GAS COOKTOP

- 30" cooktop with 5 burners
- Heavy-cast, dishwasher-safe edge-to-edge grates
- **18,000-BTU tri-ring burner**
- White LED backlit heavy-duty knobs
- **Control lock capability**
- Precise Simmer burner
- Sealed cooktop burners
- Griddle included (JXGRIDL230)
- MAX burner system

Stainless – PGP9030SLSS

Perfect Match Wall Ovens: PTD9000 (Double), PTS9000 (Single)







ADA COMPLIANT UFAS COMPLIANT

PGP7030

GE PROFILE 30" GAS COOKTOP

- 30" cooktop with 5 burners
- Heavy-cast, edge-to-edge grates
- **18,000-BTU Power Boil burner**
- **White LED backlit heavy-duty knobs**
- Precise Simmer burner
- Sealed cooktop burners
- Heavy-duty, dishwasher-safe grates
- Optional griddle (JXGRIDL230)
- MAX burner system

Stainless – PGP7030SLSS

Black Stainless – PGP7030BMTS

Perfect Match Wall Ovens: PTD7000 (Double), PTS7000 (Single)





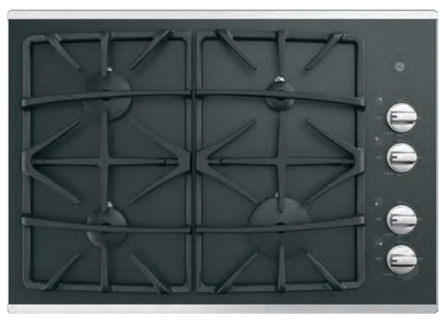

ADA COMPLIANT UFAS COMPLIANT

JGP5530

GE 30" GAS COOKTOP

- **Gas-on-glass cooktop**
- Sealed cooktop burners
- 15,000-BTU Power Boil burner
- Precise Simmer burner
- Continuous grates
- Dishwasher-safe grates and knobs

Stainless – JGP5530SLSS

Black – JGP5530DLBB

Perfect Match Wall Ovens: JTD5000 (Double), JTS5000 (Single)



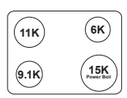

Complete features and specifications on pages 315-316.
See page 94 for gas cooktop parts & accessories.
See page 316 for approved cooktop and wall oven combinations.
See page 277 for Accessibility Requirements.
Bold = feature upgrade from previous model.
For definitions of logos, see page 9.



ADA COMPLIANT UFAS COMPLIANT

JGP5030

GE 30" GAS COOKTOP

- **30" cooktop with 5 burners**
- **Heavy-cast, edge-to-edge grates**
- 15,000-BTU Power Boil burner
- Precise Simmer burner
- Sealed cooktop burners
- Dishwasher-safe grates
- **Optional griddle (JXGRIDL230)**
- MAX burner system

Stainless – JGP5030SLSS

Black – JGP5030DLBB

Perfect Match Wall Ovens: JTD5000 (Double), JTS5000 (Single)







Model shown in Black

ADA COMPLIANT UFAS COMPLIANT

JGP3530

GE 30" DEEP-RECESSED GAS COOKTOP

- **18,000-BTU Power Boil burner**
- Precise Simmer burner
- Sealed cooktop burners
- Heavy-duty, dishwasher-safe grates
- Stainless steel, deep-recessed cooktop
- MAX burner system

Stainless – JGP3530SLSS

White – JGP3530TJWW

Black – JGP3530DLBB

Perfect Match Wall Ovens: JTD3000 (Double), JTS3000 (Single)







ADA COMPLIANT UFAS COMPLIANT

JGP3030

GE 30" DEEP-RECESSED GAS COOKTOP

- 15,000-BTU Power Boil burner
- Precise Simmer burner
- Sealed cooktop burners
- Heavy-duty, dishwasher-safe grates
- Stainless steel, deep-recessed cooktop
- MAX burner system

Stainless – JGP3030SLSS

White – JGP3030DLWW

Black – JGP3030DLBB

Perfect Match Wall Ovens: JTD3000 (Double), JTS3000 (Single)



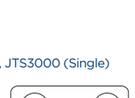

30" BUILT-IN GAS DOWNDRAFT COOKTOP



Model shown in Black

ADA COMPLIANT UFAS COMPLIANT

PGP9830

GE PROFILE™ 30" GAS DOWNDRAFT COOKTOP

- Four gas cooking burners
- Gas-on-glass cooktop
- 11,500-BTU all-purpose burner
- Downdraft exhaust
- Sealed cooktop burners
- Knob controls with ceramic-glass surface
- Dishwasher-safe grates and knobs

Stainless – PGP9830SJSS
White – PGP9830TJWW
Black – PGP9830DJBB

Perfect Match Wall Ovens: PTD9000 (Double), PTS9000 (Single)



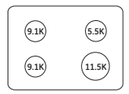

GAS COOKTOPS PARTS & ACCESSORIES

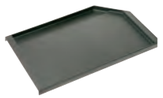

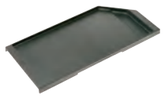

MODEL	JXGRIDL236 36" CAST-IRON GRIDDLE	JXGRIDL230 30" CAST-IRON GRIDDLE
PGP9036	INCLUDED	–
PGP7036	OPTIONAL UPGRADE	–
JGP5536	–	–
JGP5036	OPTIONAL UPGRADE	–
JGP3036	–	–
PGP9030	–	INCLUDED
PGP7030	–	OPTIONAL UPGRADE
JGP5530	–	–
JGP5030	–	OPTIONAL UPGRADE
JGP3530	–	–
JGP3030	–	–
PGP9830	–	–

Complete features and specifications on pages 317-318.
See page 316 for approved cooktop and wall oven combinations.
See page 277 for Accessibility Requirements.
Bold = feature upgrade from previous model.
For definitions of logos, see page 9.









FEATURE HIGHLIGHTS



ADJUSTABLE CFM

Make code compliance easy for builders with a fan speed that can be set to high or low.



BACKLIT CONTROLS

Attractive controls are easy to read and easy to use.

Not all features available on all models.



BUILT-IN WIFI/ VOICE-ENABLED

Turn on the night light from anywhere using SmartHQ™ on your smartphone or the sound of your voice.*

Visit geappliances.com/connect to learn about apps that support this appliance.

*Requires compatible voice assistant.
Not all features available on all models.

P GE Profile™ G GE Appliances U Universal

DESIGNER HOODS



Model shown in Black Stainless

ADA COMPLIANT · Smart · Bluetooth · Wi-Fi

UVW9361

36" SMART DESIGNER WALL-MOUNT HOOD WITH PERIMETER VENTING

- Perimeter venting
- LED backlit glass touch control
- Built-in WiFi powered by SmartHQ
- 610-CFM adjustable blower
- Triple LED dimmable lighting
- 10-ft. ceiling height
- Hidden filter venting
- Timer and clock
- Chef Connect
- Four-speed fan control
- Optional 12′ and 14′ duct cover accessories

Stainless – UVW9361SLSS
Black Stainless – UVW9361BLTS

UVW9301 (not shown)

30" SMART DESIGNER WALL-MOUNT HOOD WITH PERIMETER VENTING

Similar to UVW9361 except 30" wide

Stainless – UVW9301SLSS
Black Stainless – UVW9301BLTS



ADA COMPLIANT

UVW8361

36" DESIGNER WALL-MOUNT HOOD WITH DIMMABLE LED LIGHTING

- 350-CFM blower
- Dual LED dimmable lighting
- Electronic backlit controls
- Convertible venting options
- Chef Connect
- 9-ft. ceiling height
- Dishwasher-safe filter
- Optional 10′, 12′ and 14′ duct cover accessories

Stainless – UVW8361SLSS

UVW8301 (not shown)

30" DESIGNER WALL-MOUNT HOOD WITH DIMMABLE LED LIGHTING

Similar to UVW8361 except 30" wide

Stainless – UVW8301SLSS

The *Bluetooth*® word mark and logos are registered trademarks owned by Bluetooth SIG, Inc. and any use of such marks by GE Appliances is under license. Other trademarks and trade names are those of their respective owners.

Complete features and specifications on page 319.
See page 277 for Accessibility Requirements.
See pages 102-104 for ventilation parts & accessories.
For definitions of logos, see page 9.

CUSTOM HOOD INSERTS



ADA COMPLIANT · Smart · Bluetooth · Chef Connect

UVC9360

36" SMART DESIGNER CUSTOM INSERT WITH DIMMABLE LED LIGHTING

- 610-CFM adjustable blower
- Triple-LED dimmable lighting
- Dishwasher-safe, removable-baffle stainless steel filters
- Electronic backlit controls
- Built-in WiFi powered by SmartHQ™
- Chef Connect
- Four-speed fan control

Stainless – UVC9360SLSS

UVC9300 (not shown)

GE 30" SMART DESIGNER CUSTOM INSERT WITH DIMMABLE LED LIGHTING

Similar to UVC9360 except 30" wide

Stainless – UVC9300SLSS



ADA COMPLIANT

UVC7300

20" CUSTOM HOOD INSERT WITH DIMMABLE LED LIGHTING

- 390-CFM blower
- Dual-LED dimmable lighting
- Dishwasher-safe filter
- Convertible venting options
- Push-button controls
- Four-speed fan control
- Optional 36" and 30" hood liner accessories

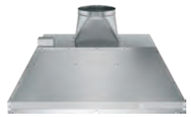

Stainless – UVC7300SLSS

WALL-MOUNT & ISLAND-MOUNT HOODS



PV976

GE PROFILE™ 36" WALL-MOUNT CHIMNEY HOOD

- **450-CFM venting system**
- Push-button controls
- Variable-speed fan control
- Vertical exhaust
- Dual halogen cooktop lighting
- Night light
- Dishwasher-safe filter

Stainless – PV976NSS

PV977 (not shown)

GE PROFILE 36" ISLAND-MOUNT CHIMNEY HOOD

Similar to PV976 except island-mount

Stainless – PV977NSS

PV970 (not shown)

GE PROFILE 30" WALL-MOUNT CHIMNEY HOOD

Similar to PV976 except 30" wide

Stainless – PV970NSS

Complete features and specifications on pages 319–321.
See page 277 for Accessibility Requirements.
See pages 102-104 for ventilation parts & accessories.
Bold = feature upgrade from previous model.
For definitions of logos, see page 9.
The *Bluetooth*® word mark and logos are registered trademarks owned by Bluetooth SIG, Inc. and any use of such marks by GE Appliances is under license. Other trademarks and trade names are those of their respective owners.



Model shown in Slate

ADA COMPLIANT

JVW5361

GE 36" WALL-MOUNT PYRAMID CHIMNEY HOOD

- **350-CFM venting system with boost**
- Electronic backlit controls
- Dual halogen cooktop lighting
- Night light
- Convertible venting options
- Optional remote control for ADA installation (UXRC70)
- Optional 10' duct cover accessory

Stainless – JVW5361SJSS
Black Stainless – JVW5361BJTS
Slate – JVW5361EJES
Black Slate – JVW5361FJDS

JVW5301 (not shown)

GE 30" WALL-MOUNT PYRAMID CHIMNEY HOOD

Similar to JVW5361 except 30" wide

Stainless – JVW5301SJSS
Black Stainless – JVW5301BJTS
Slate – JVW5301EJES
Black Slate – JVW5301FJDS

COMMERCIAL & DESIGNER HOODS



ADA COMPLIANT · Smart · Bluetooth

UVW9364

36" COMMERCIAL HOOD

- 600-CFM venting system
- Four-speed fan control
- Horizontal and vertical exhaust
- LED lighting
- Premium stainless steel baffle filters
- QuietBoost

Stainless – UVW9364SPSS

UVW9304 (not shown)

30" COMMERCIAL HOOD

Similar to UVW9364 except 30" wide

Stainless – UVW9304SPSS



ADA COMPLIANT · Smart · Bluetooth

UVW8364

36" DESIGNER WALL-MOUNT HOOD WITH DIMMABLE LED LIGHTING

- **600-CFM venting system**
- Four-speed fan control
- Vertical exhaust
- LED cooktop lighting
- Night light
- Removable grease filter
- Built-in WiFi powered by SmartHQ
- 10' low rise hood

Stainless – UVW8364SPSS

UVW8304 (not shown)

30" DESIGNER WALL-MOUNT HOOD WITH DIMMABLE LED LIGHTING

Similar to UVW8364 except 30" wide

Stainless – UVW8304SPSS

UNDER-THE-CABINET HOODS



Model shown in Slate

PVX7300

GE PROFILE™ 30" UNDER-THE-CABINET HOOD

- **Four-speed with boost, 390-CFM venting system**
- 10-minute installation
- Glass touch controls
- Dual LED lighting with night light (bulbs included)
- Chef Connect
- Auto-off
- Convertible venting options
- Dual full-length, dishwasher-safe stainless steel mesh filters
- Optional remote control for ADA installation (UXRC70)

Stainless – PVX7300SJSS
Black Slate – PVX7300FJDS

PVX7360 (not shown)

GE PROFILE 36" UNDER-THE-CABINET HOOD

Similar to PVX7300 except 36" wide

Stainless – PVX7360SJSS
Black Slate – PVX7360FJDS



JVX5300

GE 30" UNDER-THE-CABINET HOOD

- **Four-speed with boost 310-CFM venting system**
- 10-minute installation
- Electronic backlit controls
- Dual halogen lighting with night light (bulbs included)
- Auto-off
- Convertible venting options
- Dual full-length, dishwasher-safe metal mesh filters
- Optional remote control for ADA installation (UXRC70)

Stainless – JVX5300SJSS
Black Stainless – JVX5300BJTS
Slate – JVX5300EJES
White – JVX5300DJWW
Black – JVX5300DJBB

JVX5360 (not shown)

GE 36" UNDER-THE-CABINET HOOD

Similar to JVX5300 except 36" wide

Stainless – JVX5360SJSS
Black Stainless – JVX5360BJTS
Slate – JVX5360EJES*
White – JVX5360DJWW
Black – JVX5360DJBB



Model shown in White

JV338

GE 30" STANDARD HOOD

- 170-CFM venting system
- Vertical and rear exhaust

White – JV338HWW
Black – JV338HBB

JN327 (not shown)

GE 30" NON-VENTED HOOD

Similar to JV338 except non-vented

White – JN327HWW
Bisque – JN327HCC
Black – JN327HBB

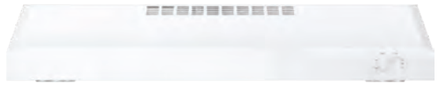

Model shown in White

JVX5305

GE 30" ENERGY STAR® CERTIFIED UNDER-THE-CABINET HOOD

- **Two-speed, 270-CFM venting system**
- 10-minute installation
- Front controls
- Dual LED lighting with night light (bulbs included)
- Convertible venting options
- Vertical and rear exhaust
- Dual full-length, dishwasher-safe metal mesh filters
- Optional wall switch for ADA installation

Stainless – JVX5305SJSS
Slate – JVX5305EJES
White – JVX5305DJWW
Black – JVX5305DJBB

JVX5365 (not shown)

GE 36" ENERGY STAR CERTIFIED UNDER-THE-CABINET HOOD

Similar to JVX5305 except 36" wide

Stainless – JVX5365SJSS



Model shown in Black

JVX3300

GE 30" UNDER-THE-CABINET HOOD

- **Two-speed, 200-CFM venting system**
- 10-minute installation
- Front controls
- Cooktop lighting (bulb included)
- Convertible venting options
- Vertical and rear exhaust
- Single dishwasher-safe metal mesh filter
- Optional wall switch for ADA installation

Stainless – JVX3300SJSS
Slate – JVX3300EJES
White – JVX3300DJWW
Black – JVX3300DJBB

JVX3240 (not shown)

GE 24" UNDER-THE-CABINET HOOD

Similar to JVX3300 except 24" wide

Stainless – JVX3240SJSS
White – JVX3240DJWW

*10 ft. duct cover included in box.
Complete features and specifications on pages 323-324.
See page 277 for Accessibility Requirements.
See pages 102-104 for ventilation parts & accessories.
Bold = feature upgrade from previous model.
For definitions of logos, see page 9.
The *Bluetooth*® word mark and logos are registered trademarks owned by Bluetooth SIG, Inc. and any use of such marks by GE Appliances is under license. Other trademarks and trade names are those of their respective owners.

TELESCOPIC DOWNDRAFT SYSTEM



UVD6361

36" TELESCOPIC DOWNDRAFT SYSTEM

- **500-CFM venting system**
- Variable-speed fan control
- Rises 8-1/2" above cooktop surface
- Retracts when not in use
- Separate remote raise/lower switch

Stainless – UVD6361SPSS
Black – UVD6361DPBB

UVD6301 (not shown)

30" TELESCOPIC DOWNDRAFT SYSTEM

Similar to UVD6361 except 30" wide

Stainless – UVD6301SPSS
Black – UVD6301DPBB

VENTILATION PARTS & ACCESSORIES

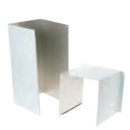









MODEL	CX10DC9SPSS 10-FT. CEILING DUCT COVER KIT CX12DC9SPSS 12-FT. CEILING DUCT COVER KIT	UXDC53/UXDC72 RANGE HOOD 10-FT. DUCT COVER KIT	UX10DC8 10-FT. CEILING DUCT COVER KIT	UX12DC9 12-FT. CEILING DUCT COVER KIT	UX14DC9 14-FT. CEILING DUCT COVER KIT
	• For use with GE 30" and 36" designer hoods • Covers exposed duct-work running from the hood to ceilings • GE genuine parts warranty	• For higher ceiling installations, the optional 10-ft. ceiling duct cover kit is available, purchased separately • UXDC53: one piece to be used with the supplied duct cover included in box • UXDC72: two-piece kit to replace the supplied duct cover included in box	• For higher ceiling installations, the optional 10-ft. ceiling duct cover kit is available, purchased separately • Includes a longer chimney that replaces the original in the package	• For higher ceiling installations, the optional 12-ft. ceiling duct cover kit is available, purchased separately • Includes a longer chimney that replaces the original in the package	• For higher ceiling installations, the optional 14-ft. ceiling duct cover kit is available, purchased separately • Includes a longer chimney that replaces the original in the package
UVW9361	–	–	–	OPTIONAL UPGRADE	OPTIONAL UPGRADE
UVW9301	–	–	–	OPTIONAL UPGRADE	OPTIONAL UPGRADE
UVW8361	–	–	OPTIONAL UPGRADE	OPTIONAL UPGRADE	OPTIONAL UPGRADE
UVW8301	–	–	OPTIONAL UPGRADE	OPTIONAL UPGRADE	OPTIONAL UPGRADE
UVC9360	–	–	–	–	–
UVC9300	–	–	–	–	–
UVC7300	–	–	–	–	–
PV977	–	–	–	–	–
PV976	–	–	–	–	–
PV970	–	–	–	–	–
JVW5361	–	OPTIONAL UPGRADE	–	–	–
JVW5301	–	OPTIONAL UPGRADE	–	–	–
UVD6361	–	–	–	–	–
UVD6301	–	–	–	–	–
PVX7360	–	–	–	–	–
PVX7300	–	–	–	–	–
JVX5360	–	–	–	–	–
JVX5300	–	–	–	–	–
JVX5365	–	–	–	–	–
JVX5305	–	–	–	–	–
JVX3300	–	–	–	–	–
JVX3240	–	–	–	–	–
JV338	–	–	–	–	–
JN327	–	–	–	–	–
UVW8304	OPTIONAL UPGRADE	–	–	–	–
UVW8364	OPTIONAL UPGRADE	–	–	–	–
UVW9304	OPTIONAL UPGRADE	–	–	–	–
UVW9364	OPTIONAL UPGRADE	–	–	–	–









MODEL	JXDA22 GE OPTIONAL DAMPER	JXMUA6 AUTOMATIC MAKE-UP AIR DAMPER FOR 6" DUCT	JXMUA8 AUTOMATIC MAKE-UP AIR DAMPER FOR 8" DUCT	JXHC1 GE CORD KIT
	• For use with GE deluxe hoods • Allows hood to fit a standard 7" round duct • GE genuine parts warranty			• Allows range hoods to be installed with a plug and receptacle instead of being hard-wired • Ideal when upgrading from standard vent hood to Spacemaker® over-the-range microwave hoods • Eliminates need to have an electrician come to the home when the microwave is being installed
UVW9361	–	–	OPTIONAL UPGRADE	OPTIONAL UPGRADE
UVW9301	–	–	OPTIONAL UPGRADE	OPTIONAL UPGRADE
UVW8361	–	–	OPTIONAL UPGRADE	OPTIONAL UPGRADE
UVW8301	–	–	OPTIONAL UPGRADE	OPTIONAL UPGRADE
UVC9360	–	–	OPTIONAL UPGRADE	OPTIONAL UPGRADE
UVC9300	–	–	OPTIONAL UPGRADE	OPTIONAL UPGRADE
UVC7300	–	–	OPTIONAL UPGRADE	OPTIONAL UPGRADE
PV977	–	–	–	–
PV976	–	–	–	–
PV970	–	–	–	–
JVW5361	–	OPTIONAL UPGRADE	–	–
JVW5301	–	OPTIONAL UPGRADE	–	–
UVD6361	–	–	–	–
UVD6301	–	–	–	–
PVX7360	–	–	–	OPTIONAL UPGRADE
PVX7300	–	–	–	OPTIONAL UPGRADE
JVX5360	–	–	–	OPTIONAL UPGRADE
JVX5300	–	–	–	OPTIONAL UPGRADE
JVX5365	–	–	–	OPTIONAL UPGRADE
JVX5305	–	–	–	OPTIONAL UPGRADE
JVX3300	–	–	–	OPTIONAL UPGRADE
JVX3240	–	–	–	OPTIONAL UPGRADE
JV338	–	–	–	OPTIONAL UPGRADE
JN327	–	–	–	OPTIONAL UPGRADE
UVW8304	–	–	–	–
UVW8364	–	–	–	–
UVW9304	–	–	–	–
UVW9364	–	–	–	–

ORDER GE PARTS AND ACCESSORIES BY CALLING 800-851-6200 OR ONLINE AT WWW.GEAPPLIANCEPARTS.COM BY USING GE PARTS ACCOUNT NUMBER.

VENTILATION PARTS & ACCESSORIES




MODEL	JXCF72/WB02X24842 RANGE HOOD CHARCOAL FILTER- 2-PACK	UXRC70/WB02X24870 RANGE HOOD REMOTE CONTROL	JXS56SS 15" CABINET SPACER FOR 36" HOODS	JXS50SS 15" CABINET SPACER FOR 30" HOODS
JVW5361	OPTIONAL UPGRADE	OPTIONAL UPGRADE	–	–
JVW5301	OPTIONAL UPGRADE	OPTIONAL UPGRADE	–	–
UVD6361	–	–	–	–
UVD6301	–	–	–	–
PVX7360	–	OPTIONAL UPGRADE	OPTIONAL UPGRADE	–
PVX7300	–	OPTIONAL UPGRADE	–	OPTIONAL UPGRADE
JVX5360	–	OPTIONAL UPGRADE	OPTIONAL UPGRADE	–
JVX5300	–	OPTIONAL UPGRADE	–	OPTIONAL UPGRADE
JVX5365	–	–	OPTIONAL UPGRADE	–
JVX5305	–	–	–	OPTIONAL UPGRADE
JVX3300	–	–	–	OPTIONAL UPGRADE
UVW8304	–	–	–	–
UVW8364	–	–	–	–
UVW9304	–	–	–	–
UVW9364	–	–	–	–

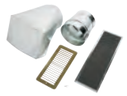


MODEL	UXN70 RECIRCULATING KIT	UXCF91 CHARCOAL FILTER	UXDT86 DUCT REDUCER
			• Transition piece from 8" duct cover to 6" duct cover
UVW9361	–	OPTIONAL UPGRADE	OPTIONAL UPGRADE
UVW9301	–	OPTIONAL UPGRADE	OPTIONAL UPGRADE
UVW8361	–	OPTIONAL UPGRADE	OPTIONAL UPGRADE
UVW8301	–	OPTIONAL UPGRADE	OPTIONAL UPGRADE
UVC9360	OPTIONAL UPGRADE	OPTIONAL UPGRADE	OPTIONAL UPGRADE
UVC9300	OPTIONAL UPGRADE	OPTIONAL UPGRADE	OPTIONAL UPGRADE
UVC7300	OPTIONAL UPGRADE	OPTIONAL UPGRADE	OPTIONAL UPGRADE
UVW8304	–	–	–
UVW8364	–	–	–
UVW9304	–	–	–
UVW9364	–	–	–




MODEL	UXHL30 30" HOOD LINER	UXHL36 36" HOOD LINER
	• Custom appearance and built-in convenience	• Custom appearance and built-in convenience
UVW9361	–	–
UVW9301	–	–
UVW8361	–	–
UVW8301	–	–
UVC9360	–	–
UVC9300	–	–
UVC7300	REQUIRED FOR 30" INSTALLATION	REQUIRED FOR 36" INSTALLATION
UVW8304	–	–
UVW8364	–	–
UVW9304	–	–
UVW9364	–	–




MODEL	UXB630BPTS 30" TELESCOPIC HOOD TRIM ACCESSORY	UXB636BPTS 36" TELESCOPIC HOOD TRIM ACCESSORY
UVD6301SPSS	OPTIONAL UPGRADE	–
UVD6301DPBB	OPTIONAL UPGRADE	–
UVD6361SPSS	–	OPTIONAL UPGRADE
UVD6361DPBB	–	OPTIONAL UPGRADE

ORDER GE PARTS AND ACCESSORIES BY CALLING 800-851-6200 OR ONLINE AT WWW.GEAPPLIANCEPARTS.COM BY USING GE PARTS ACCOUNT NUMBER.









DROP-IN RANGES

FEATURE HIGHLIGHTS

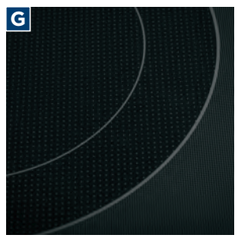

9"/6" POWER BOIL ELEMENT

This powerful element supplies the intense heat needed for faster boiling, sautéing and stir-frying.



SELF-CLEAN OVEN

Self-clean allows you to spare yourself the trouble and effort it takes to scrub the oven interior. The oven does all the work!



DUAL-ELEMENT BAKE

This top-and-bottom heating produces uniform browning and fast oven preheating.

P GE Profile™ G GE Appliances

Not all features available on all models.

DROP-IN ELECTRIC RANGES



JD630

GE 30" DROP-IN RANGE

- **9"/6" Power Boil element**
- **Self-clean oven**
- **Ceramic-glass cooktop**
- **Black gloss oven interior**
- Dual-element bake
- Electronic oven controls

Stainless – JD630SFSS
White – JD630DFWW
Black – JD630DFBB

Perfect Match OTR Microwave: JVM6175



ADA COMPLIANT UFAS COMPLIANT

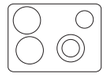



JM250

GE 27" DROP-IN RANGE

- Self-clean oven
- Sensi-Temp Technology
- Black gloss oven interior
- Chrome drip bowls
- Electronic clock and timer

White – JM250DFWW
Black – JM250DFBB

Perfect Match OTR Microwave: JVM3160



Model shown in White

ADA COMPLIANT UFAS COMPLIANT

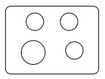

Complete features and specifications on pages 325-326.
See page 277 for Accessibility Requirements.
Bold = feature upgrade from previous model.
For definitions of logos, see page 9.



SLIDE-IN ELECTRIC RANGES
WITH FRONT CONTROLS

FEATURE HIGHLIGHTS



BUILT-IN WIFI POWERED BY SmartHQ™

Connect, control and manage your oven from anywhere with your smartphone or tablet.

Visit geappliances.com/connect to learn about apps that support this appliance.



BETTER WHEN CONNECTED

Ensure your oven always has the latest features, like new Air Fry modes, with downloadable software upgrades.



NO-PREHEAT AIR FRY

Cook crispier, healthier versions of your favorite foods with an air fryer built right into the oven. Best of all, it doesn't require preheating, saving you time.



GUIDED COOKING

Enjoy a streamlined experience with guided cooking from Hestan Cue, a system that combines video-guided recipes with automatic range adjustments.

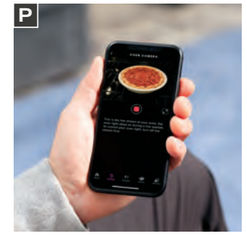

IN-OVEN COOKCAM™

Use a heat-resistant camera and the SmartHQ app to monitor food from anywhere.



COOKTOP SENSOR

Control the temperature of any induction-ready pan through a smart device or the control panel.



GLIDE TOUCH CONTROLS

Precisely control element temperature with just the swipe of a finger.



TWO 8" 2,500-WATT SYNCHRONIZED ELEMENTS

Control two 8" elements simultaneously to evenly heat large cookware or griddles.



FIT GUARANTEE

No-preheat air fry slide-in ranges from GE Appliances are guaranteed for an exact fit to make replacement easy.

See sales associate or geappliances.com for details.

The *Bluetooth*® word mark and logos are registered trademarks owned by Bluetooth SIG, Inc. and any use of such marks by GE Appliances is under license. Other trademarks and trade names are those of their respective owners.

P GE Profile™ G GE Appliances

Not all features available on all models.

SLIDE-IN ELECTRIC RANGES



PHS93X

GE PROFILE™ 30" SMART SLIDE-IN FRONT-CONTROL INDUCTION AND CONVECTION RANGE

- Better when connected
- Built-in WiFi powered by SmartHQ™*
- **In-oven CookCam™**
- **Precision cooktop sensor**
- Guided cooking
- Sous-vide capability
- **Precision oven modes**
- No-preheat air fry
- Fingerprint Resistant Stainless
- Brilliant Touch 7" Display
- Fit guarantee**

Fingerprint Resistant Stainless – PHS93XYPFS

Perfect Match OTR Microwave: PSA9120

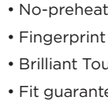



PHS930

GE PROFILE 30" SMART SLIDE-IN, FRONT-CONTROL INDUCTION AND CONVECTION RANGE

- Better when connected
- Built-in WiFi powered by SmartHQ*
- **Guided cooking**
- **Sous-vide capability**
- **No-preheat air fry**
- Fingerprint Resistant Stainless
- Glide touch controls
- **Induction technology**
- Two 8" synchronized elements
- Fit guarantee**

Fingerprint Resistant Stainless – PHS930YPFS

Black Stainless – PHS930BPTS

Perfect Match OTR Microwave: PSA9120





JSS86

GE PROFILE 30" SLIDE-IN ELECTRIC CONVECTION RANGE

- 12"/9" dual element
- **True Convection**
- 9"/6" Power Boil element
- Fifth warming zone
- Fast preheat
- Steam Clean
- Hidden bake oven interior
- Glass touch control
- Large-capacity double oven
- Fit guarantee**

Stainless – JSS86SPSS

Perfect Match OTR Microwave: JVM7195





Model shown in Slate

JS760

GE 30" SLIDE-IN CONVECTION RANGE

- **No-preheat air fry**
- 12"/9" dual element
- **Convection fan**
- 9"/6" 3,100-watt Power Boil element
- Fifth element warming zone
- **Fast preheat**
- **Self-clean with Steam Clean option**
- **Smooth-glide storage drawer**
- **Hidden bake oven interior**
- Fit guarantee**

Stainless – JS760SPSS
Slate – JS760EPES
Black Slate – JS760FPDS
White – JS760DPWW
Black – JS760DPBB

Perfect Match OTR Microwave: JVM7195





Model shown in Black Stainless

PSS93

GE PROFILE 30" SMART SLIDE-IN ELECTRIC CONVECTION RANGE

- Better when connected
- Built-in WiFi powered by SmartHQ*
- **No-preheat air fry**
- **Fingerprint Resistant Stainless**
- **12"/9"/6" 3,600-watt Power Boil**
- **Two 8" synchronized elements**
- **Glide touch controls**
- **Chef Connect*****
- **True Convection with Precise Air**
- Steam Clean
- Fit guarantee**

Fingerprint Resistant Stainless – PSS93YPFS

Black Stainless – PSS93BPTS

Perfect Match OTR Microwave: PSA9120





PS960

GE PROFILE 30" SMART SLIDE-IN DOUBLE OVEN CONVECTION RANGE

- Better when connected
- Built-in WiFi powered by SmartHQ*
- No-preheat air fry
- **12"/9"/6" 3,600-watt Power Boil**
- **8"/5" and 8" synchronized elements**
- Fingerprint Resistant Stainless
- Glide touch controls
- Chef Connect***
- True Convection with Precise Air
- Never-Scrub, heavy-duty, smooth-glide racks
- Temperature probe
- Fit guarantee**

Fingerprint Resistant Stainless – PS960YPFS

Perfect Match OTR Microwave: PVM9179





JS645

GE 30" SLIDE-IN RANGE

- **Two 9"/6" 3,100-watt Power Boil elements**
- Self-clean oven
- 5.3 cu. ft. oven capacity
- Dual-element bake
- Finished sides
- Removable full-width storage drawer
- Stainless steel knobs
- White LED
- Fit guarantee**

Stainless – JS645SLSS
Slate – JS645ELES
Black Slate – JS645FLDS
White – JS645DLWW

Perfect Match OTR Microwave: JVM6175



*See page 327 for WiFi-enabled features.
**See sales associate or visit geappliances.com for details.
***Chef Connect functionality available only when pairing to compatible over-the-range microwave ovens and hoods.
Complete features and specifications on pages 327-328.
See page 116 for slide-in electric range parts & accessories.
See page 277 for Accessibility Requirements.

Bold = feature upgrade from previous model.
For definitions of logos, see page 9.
The *Bluetooth*® word mark and logos are registered trademarks owned by Bluetooth SIG, Inc. and any use of such marks by GE Appliances is under license. Other trademarks and trade names are those of their respective owners.

SLIDE-IN GAS RANGES
WITH FRONT CONTROLS

FEATURE HIGHLIGHTS



BUILT-IN WIFI POWERED BY SmartHQ™

Connect, control and manage your oven from anywhere with your smartphone or tablet.

Visit geappliances.com/connect to learn about apps that support this appliance.



BETTER WHEN CONNECTED

Ensure your oven always has the latest features, like new Air Fry modes, with downloadable software upgrades.



NO-PREHEAT AIR FRY

Cook crispier, healthier versions of your favorite foods with an air fryer built right into the oven. Best of all, it doesn't require preheating, saving you time.



21,000-BTU TRI-RING BURNER

Versatile burner creates intense heat perfect for searing, frying and sautéing.



REVERSIBLE CAST-IRON INTEGRATED GRIDDLE/GRILL

From grilled cheese to pancakes to quesadillas, do it all right on the cooktop.



DUAL-PURPOSE CENTER BURNER

Cook your way with a round burner for steaming broccoli and an oval burner for grilling sandwiches.



TRUE CONVECTION WITH PRECISE AIR

Accurate heat circulation ensures evenly baked foods.



CHEF CONNECT

Three options with a single touch. For instant convenience, choose when to automatically sync clocks and the range elements with the microwave's surface light and vent.



FIT GUARANTEE

Replace your old 30" free-standing range with a new 30" slide-in model. Our slide-in ranges are guaranteed for an exact fit to make replacement easy.

See sales associate or geappliances.com for details.

The *Bluetooth*® word mark and logos are registered trademarks owned by Bluetooth SIG, Inc. and any use of such marks by GE Appliances is under license. Other trademarks and trade names are those of their respective owners.

P GE Profile™ G GE Appliances

Not all features available on all models.

SLIDE-IN GAS RANGES



PGS960

GE PROFILE™ 30" SMART SLIDE-IN, FRONT-CONTROL GAS DOUBLE OVEN CONVECTION RANGE

- Better when connected
- Built-in WiFi powered by SmartHQ™*
- No-preheat air fry
- Edge-to-edge cooktop
- 21,000-BTU tri-ring burner
- Extra-large, integrated, reversible cast-iron grill/griddle
- Dual-purpose center burner
- 15,000-BTU Power Boil burner
- Chef Connect***
- **Large-capacity double oven**
- True Convection
- Fit guarantee**

Fingerprint Resistant Stainless – PGS960YPFS

Perfect Match OTR Microwave: PSA9120





Model shown in Black Stainless

PGS930

GE PROFILE 30" SMART SLIDE-IN, FRONT-CONTROL RANGE

- Better when connected
- Built-in WiFi powered by SmartHQ*
- No-preheat air fry
- Edge-to-edge cooktop
- **21,000-BTU tri-ring burner**
- **Extra-large, integrated, reversible cast-iron grill/griddle**
- **Dual-purpose center burner**
- 15,000-BTU Power Boil burner
- **Chef Connect*****
- **True Convection**
- Fit guarantee**

Fingerprint Resistant Stainless – PGS930YPFS

Black Stainless – PGS930BPTS

Perfect Match OTR Microwave: PVM9179





Model shown in Slate

JGS760

GE 30" SLIDE-IN, FRONT-CONTROL CONVECTION RANGE

- **No-preheat air fry**
- Edge-to-edge cooktop
- Extra-large, integrated, non-stick griddle
- 18,000-BTU Power Boil burner
- **Gas convection**
- **Self-clean with Steam Clean option**
- Smooth-glide storage drawer
- 10,000-BTU oval burner
- Heavy-duty, dishwasher-safe grates
- Fit guarantee**

Stainless – JGS760SPSS

Slate – JGS760EPES

Black Slate – JGS760FPDS

White – JGS760DPWW

Black – JGS760DPBB

Perfect Match OTR Microwave: JVM7195





Model shown in Slate

JGSS66

GE 30" SLIDE-IN GAS RANGE

- Edge-to-edge cooktop
- **Two 15,000-BTU Power Boil burners**
- Extra-large, integrated, non-stick griddle
- 10,000-BTU oval burner
- **Steam Clean**
- In-oven broil
- Smooth-glide storage drawer
- 5.3 cu. ft. oven capacity
- Fit guarantee**

Stainless – JGSS66SELSS

Slate – JGSS66EELES

Black Slate – JGSS66FELDS

Perfect Match OTR Microwave: JVM6175





P2S930

GE PROFILE 30" SMART SLIDE-IN, DUAL-FUEL, FRONT-CONTROL RANGE

- Better when connected
- Built-in WiFi powered by SmartHQ*
- No-preheat air fry
- Edge-to-edge cooktop
- **21,000-BTU Tri-ring burner**
- **Extra-large, integrated, reversible cast-iron grill/griddle**
- **Dual-purpose center burner**
- 15,000-BTU Power Boil burner
- **Chef Connect*****
- **True Convection**
- Fit guarantee**

Fingerprint Resistant Stainless – P2S930YPFS

Perfect Match OTR Microwave: PVM9179





JGSS86

GE 30" SLIDE-IN FRONT-CONTROL GAS DOUBLE OVEN RANGE

- Edge-to-edge cooktop
- 15,000-BTU Power Boil burner
- 18,000-BTU Power Boil burner
- Extra-large, integrated non-stick griddle
- 10,000-BTU oval burner
- Steam Clean
- In-oven broil
- True Convection
- **Large-capacity double oven**
- Fit guarantee**

Stainless – JGSS86SPSS

Perfect Match OTR Microwave: JVM7195



*See page 329 for WiFi-enabled features.
**See sales associate or visit geappliances.com for details.
***Chef Connect functionality available only when pairing to compatible over-the-range microwave ovens and hoods.
Complete features and specifications on pages 329-330.
See page 117 for slide-in gas range parts & accessories.
See page 277 for Accessibility Requirements.

Bold = feature upgrade from previous model.
For definitions of logos, see page 9.
The *Bluetooth*® word mark and logos are registered trademarks owned by Bluetooth SIG, Inc. and any use of such marks by GE Appliances is under license. Other trademarks and trade names are those of their respective owners.

SLIDE-IN ELECTRIC RANGE PARTS & ACCESSORIES





MODEL	JXFILLR1SS/DD/BB FILLER KIT • Eliminates gap between counter and appliances for a seamless look • Adheres directly to counter • Easy to install • Color options: Stainless, Dark Gray, Black	WB4820881 OR WB48X20862 NEVER-SCRUB ROLLER RACK • Easily remove even the heaviest dishes with a roller rack that's engineered to glide seamlessly out of the oven
PHS93XYPFS	OPTIONAL UPGRADE	**INCLUDED**
PHS930YPFS	OPTIONAL UPGRADE	OPTIONAL UPGRADE (WB48X20881)
PHS930BPTS	OPTIONAL UPGRADE	OPTIONAL UPGRADE (WB48X20881)
PSS93YPFS	OPTIONAL UPGRADE	—
PSS93BPTS	OPTIONAL UPGRADE	—
PS960YPFS	OPTIONAL UPGRADE	OPTIONAL UPGRADE (WB48X20862)
JSS86SPSS	OPTIONAL UPGRADE	—
JS760SPSS	OPTIONAL UPGRADE	OPTIONAL UPGRADE (WB48X20881)
JS760EPES	OPTIONAL UPGRADE	OPTIONAL UPGRADE (WB48X20881)
JS760FPDS	OPTIONAL UPGRADE	OPTIONAL UPGRADE (WB48X20881)
JS760DPWW	OPTIONAL UPGRADE	OPTIONAL UPGRADE (WB48X20881)
JS760DPBB	OPTIONAL UPGRADE	OPTIONAL UPGRADE (WB48X20881)
JS645SLSS	OPTIONAL UPGRADE	OPTIONAL UPGRADE (WB48X20881)
JS645ELES	OPTIONAL UPGRADE	OPTIONAL UPGRADE (WB48X20881)
JS645FLDS	OPTIONAL UPGRADE	OPTIONAL UPGRADE (WB48X20881)
JS645DLWW	OPTIONAL UPGRADE	OPTIONAL UPGRADE (WB48X20881)

ORDER GE PARTS AND ACCESSORIES BY CALLING 800-851-6200 OR ONLINE AT WWW.GEAPPLIANCEPARTS.COM BY USING GE PARTS ACCOUNT NUMBER.

SLIDE-IN GAS RANGE PARTS & ACCESSORIES











MODEL	JXFILLR1SS/DD/BB FILLER KIT • Eliminates gap between counter and appliances for a seamless look • Adheres directly to counter • Easy to install • Color options: Stainless, Dark Gray, Black	WB48X20990 OR WB48X21543 NEVER-SCRUB ROLLER RACK • Easily remove even the heaviest dishes with a roller rack that's engineered to glide seamlessly out of the oven	JXGRILL1 / WB31X24998 REVERSIBLE CAST-IRON GRIDDLE/GRILL • Cast iron • Interlocks with grates • Reversible	WB31X24738 NON-STICK ALUMINUM GRIDDLE • Heavy-duty, cast-iron construction • Interlocks with grates	JXGRATE1/ WB31X27150 CENTER GRATE • Middle grate • Ideal for cooking with odd-sized cookware • Accommodates the dual-purpose center burner
PGS960YPFS	OPTIONAL UPGRADE	OPTIONAL UPGRADE (WB48X21543)	**INCLUDED**	OPTIONAL UPGRADE	**INCLUDED**
P2S930YPFS	OPTIONAL UPGRADE	OPTIONAL UPGRADE (WB48X20990)	**INCLUDED**	OPTIONAL UPGRADE	**INCLUDED**
PGS930YPFS	OPTIONAL UPGRADE	OPTIONAL UPGRADE (WB48X21543)	**INCLUDED**	OPTIONAL UPGRADE	**INCLUDED**
PGS930BPTS	OPTIONAL UPGRADE	OPTIONAL UPGRADE (WB48X21543)	**INCLUDED**	OPTIONAL UPGRADE	**INCLUDED**
JGSS86SPSS	OPTIONAL UPGRADE	OPTIONAL UPGRADE (WB48X21543)	OPTIONAL UPGRADE	**INCLUDED**	OPTIONAL UPGRADE
JGS760SPSS	OPTIONAL UPGRADE	OPTIONAL UPGRADE (WB48X21543)	OPTIONAL UPGRADE	**INCLUDED**	OPTIONAL UPGRADE
JGS760EPES	OPTIONAL UPGRADE	OPTIONAL UPGRADE (WB48X21543)	OPTIONAL UPGRADE	**INCLUDED**	OPTIONAL UPGRADE
JGS760FPDS	OPTIONAL UPGRADE	OPTIONAL UPGRADE (WB48X21543)	OPTIONAL UPGRADE	**INCLUDED**	OPTIONAL UPGRADE
JGS760DPWW	OPTIONAL UPGRADE	OPTIONAL UPGRADE (WB48X21543)	OPTIONAL UPGRADE	**INCLUDED**	OPTIONAL UPGRADE
JGS760DPBB	OPTIONAL UPGRADE	OPTIONAL UPGRADE (WB48X21543)	OPTIONAL UPGRADE	**INCLUDED**	OPTIONAL UPGRADE
JGSS66SELSS	OPTIONAL UPGRADE	—	OPTIONAL UPGRADE	**INCLUDED**	OPTIONAL UPGRADE
JGSS66EELES	OPTIONAL UPGRADE	—	OPTIONAL UPGRADE	**INCLUDED**	OPTIONAL UPGRADE
JGS66FELDS	OPTIONAL UPGRADE	—	OPTIONAL UPGRADE	**INCLUDED**	OPTIONAL UPGRADE





PM15X113 4' UNIVERSAL GAS RANGE CONNECTION WITH AUTO SHUTOFF KIT • Includes step-by-step instructions • Helps prevent a hazardous buildup of gas • For indoor and outdoor use	PM15X103 4' UNIVERSAL GAS RANGE INSTALLATION KIT • Fits most major brands • For indoor or outdoor use • Easy to install
APPLIES TO ALL SLIDE-IN GAS RANGES	**APPLIES TO ALL SLIDE-IN GAS RANGES**

FREE-STANDING ELECTRIC RANGES

FEATURE HIGHLIGHTS



BUILT-IN WIFI POWERED BY SmartHQ™

Connect, control and manage your oven from anywhere with your smartphone or tablet.

Visit geappliances.com/connect to learn about apps that support this appliance.



NO-PREHEAT AIR FRY

With air fry right in the oven, it's easy to cook healthier, crispier foods without the grease. Plus, there's no preheat required.



FINGERPRINT RESISTANT STAINLESS

Easily wipe away smudges and prints with a Stainless finish that always looks clean.



SELF-CLEAN AND STEAM CLEAN OPTION

Choose self-clean for tough messes or Steam Clean (available on select models) for lighters soils or right after cooking.



12"/9"/6" POWER BOIL ELEMENT

Every pot and pan fits perfectly on the flexible heating element, capable of delivering an industry-leading 3,600 watts of power.



GRIDDLE ZONE

Create the perfect place for a griddle, grill, or other large cookware with two same-sized burners that work together to create an evenly heated griddle zone right on the cooktop.



CHEF CONNECT

Three options with a single touch. For instant convenience, choose when to automatically sync clocks and the range elements with the microwave's surface light and vent.



TRUE CONVECTION WITH PRECISE AIR

Enjoy golden-brown, perfectly even results with a third heating element and a reversing fan that provides enhanced heat and air circulation.



FAST PREHEAT

It's never long until dinner, with two heating elements that cut down on the time it takes to preheat the oven.

The *Bluetooth*® word mark and logos are registered trademarks owned by Bluetooth SIG, Inc. and any use of such marks by GE Appliances is under license. Other trademarks and trade names are those of their respective owners.

P GE Profile™ G GE Appliances

Not all features available on all models.

FREE-STANDING ELECTRIC RANGES



Model shown in Black Stainless

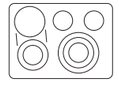

PB965

GE PROFILE™ 30" SMART DOUBLE OVEN RANGE WITH CONVECTION

- No-preheat air fry
- Built-in WiFi powered by SmartHQ™
- Fingerprint Resistant Stainless
- 12"/9"/6" 3,600-watt Power Boil
- 8"/5" dual element
- Griddle zone
- **Chef Connect***
- True Convection with Precise Air
- Fast preheat

Fingerprint Resistant Stainless – PB965YPFS
Black Stainless – PB965BPTS

Perfect Match OTR Microwave: PB965BPTS





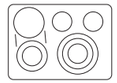

PB935

GE PROFILE 30" SMART CONVECTION RANGE

- No-preheat air fry
- **Built-in WiFi powered by SmartHQ**
- Fingerprint Resistant Stainless
- **12"/9"/6" 3,600-watt Power Boil**
- 8"/5" dual element
- **Griddle zone**
- **True Convection with Precise Air**
- Fast preheat

Fingerprint Resistant Stainless – PB935YPFS
Black Stainless – PB935BPTS

Perfect Match OTR Microwave: PVM9215







JB645

GE 30" RANGE

- **Two 9"/6" Power Boil elements**
- Self-clean oven
- Dual-element bake
- Ceramic-glass cooktop
- Removable full-width storage drawer
- 5.3 cu. ft. oven capacity

Stainless – JB645RKSS
Slate – JB645EKES
Black Slate – JB645FKDS
White – JB645DKWW
Black – JB645DKBB

Perfect Match OTR Microwave: JVM3160





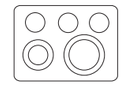

JB655

GE 30" CONVECTION RANGE

- **Fingerprint resistant options**
- **12"/9" dual element**
- **Fan convection**
- 9"/6" Power Boil element
- Fifth element warming zone
- Self-clean oven
- 5.3 cu. ft. oven capacity
- Removable full-width storage drawer

Stainless – JB655SKSS
Fingerprint Resistant Stainless – JB655YKFS
Slate – JB655EKES
Black Slate – JB655FKDS
White – JB655DKWW
Black – JB655DKBB

Perfect Match OTR Microwave: JVM6175





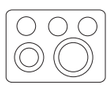

JBS86

GE 30" DOUBLE OVEN RANGE WITH CONVECTION

- Convection
- 12"/9" Power Boil element
- 9"/6" Power Boil element
- Warming mode
- Fifth element warming zone
- Steam Clean
- Fast preheat
- Large-capacity double oven

Stainless – JBS86SPSS

Perfect Match OTR Microwave: JVM7195





Model shown in Slate

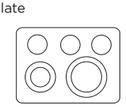

JB735

GE 30" CONVECTION RANGE

- **No-preheat air fry**
- 12"/9" dual element
- Fan convection
- Fast preheat
- Fifth element warming zone
- **Self-clean with Steam Clean option**
- **Hidden bake element**
- Black gloss interior

Stainless – JB735SPSS
Slate – JB735EPES
Black Slate – JB735FPDS
White – JB735DPWW
Black – JB735DPBB

Perfect Match OTR Microwave: JVM6175





Model shown in White

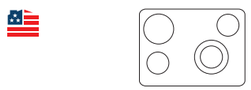

JBS60

GE 30" RANGE

- **9"/6" Power Boil element**
- 5.3 cu. ft. oven capacity
- Ceramic-glass cooktop
- Removable full-width storage drawer
- Dual-element bake

Stainless – JBS60RKSS
White – JBS60DKWW
Black – JBS60DKBB

Perfect Match OTR Microwave: JVM3160





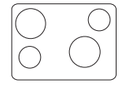

JB625

GE 30" RANGE

- 8" Power Boil element
- 5.3 cu. ft. oven capacity
- Ceramic-glass cooktop
- **Self-clean oven**
- Removable full-width storage drawer
- Dual-element bake

Stainless – JB625RKSS
White – JB625DKWW
Black – JB625DKBB

Perfect Match OTR Microwave: JVM3160



*Chef Connect functionality available only when pairing to compatible over-the-range microwave ovens and hoods.
Complete features and specifications on pages 331-333.
See pages 124-125 for free-standing electric range parts & accessories.
Bold = feature upgrade from previous model.
For definitions of logos, see page 9.
The *Bluetooth*® word mark and logos are registered trademarks owned by Bluetooth SIG, Inc. and any use of such marks by GE Appliances is under license. Other trademarks and trade names are those of their respective owners.

FREE-STANDING ELECTRIC RANGES



JBS460
GE 30" RANGE
- **Front controls**
- 5.0 cu. ft. oven capacity
- Sensi-Temp Technology
- Dual-element bake
- Standard-clean oven
- Removable full-width storage drawer

White – JBS460DMWW
Black – JBS460DMBB

Perfect Match OTR Microwave: JVM3160



Model shown in White

ADA COMPLIANT UFAS COMPLIANT

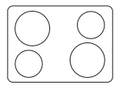



JB480
GE 30" RANGE
- Front controls
- Ceramic-glass cooktop
- 5.0 cu. ft. oven capacity
- Self-clean oven
- Dual-element bake
- Removable full-width storage drawer

Stainless – JB480SMSS
White – JB480DMWW
Black – JB480DMBB

Perfect Match OTR Microwave: JVM3160



Model shown in White

ADA COMPLIANT UFAS COMPLIANT

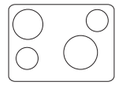



Model shown in Black

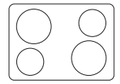

JBS160
GE 30" RANGE
- 5.0 cu. ft. oven capacity
- Standard-clean oven
- Sensi-Temp Technology
- Dual-element bake
- Removable full-width storage drawer

White – JBS160DMWW
Black – JBS160DMBB

Perfect Match Ventilation: JVX3300





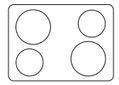

JBS360
GE 30" RANGE
- 5.0 cu. ft. oven capacity
- Standard-clean oven
- Sensi-Temp Technology
- **Electronic clock and timer**
- Removable full-width storage drawer
- Dual-element bake

Stainless – JBS360RMSS
White – JBS360DMWW
Black – JBS360DMBB

Perfect Match Ventilation: JVX3300





JB256
GE 30" RANGE
- **5.0 cu. ft. oven capacity**
- **Self-clean oven**
- Sensi-Temp Technology
- Dual-element bake
- Removable full-width storage drawer

Stainless – JB256RMSS
White – JB256DMWW
Black – JB256DMBB

Perfect Match OTR Microwave: JVM3160



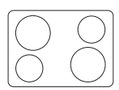



JB258
GE 30" RANGE
- **5.3 cu. ft. oven capacity**
- **Self-clean oven**
- Sensi-Temp Technology
- Dual-element bake
- Removable full-width storage drawer

Stainless – JB258RMSS
White – JB258DMWW
Bisque – JB258DMCC
Black – JB258DMBB

Perfect Match OTR Microwave: JVM3160



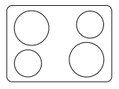



JAS640
GE 24" RANGE
- Front controls
- Ceramic-glass cooktop
- Steam Clean
- Modular backguard
- In-oven broil
- Large window
- Interior oven light
- Storage drawer

Stainless – JAS640RMSS

Perfect Match Ventilation: JVX3240



ADA COMPLIANT UFAS COMPLIANT

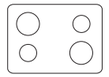

Complete features and specifications on pages 334-335.
See page 277 for Accessibility Requirements.
See pages 124-125 for free-standing electric range parts & accessories.
Bold = feature upgrade from previous model.
For definitions of logos, see page 9.

FREE-STANDING ELECTRIC RANGE PARTS & ACCESSORIES



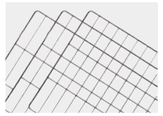







MODEL	**WB4820881 OR WB48X20862** NEVER-SCRUB ROLLER RACK • Easily remove even the heaviest dishes with a roller rack that's engineered to glide seamlessly out of the oven	**JXRACK3E** SELF-CLEAN OVEN RACKS • 3-pack of racks • Fits GE 5.3 cu. ft. free-standing electric ranges • 24" H x 17" W x 3/16" D	**WB48X10056G** UNIVERSAL BROILER PAN/RACK SET • Two-piece, porcelain-coated broiler pan set • Use for steaks, seafood, vegetables and more • Dishwasher-safe • 12-3/4" x 16-1/2"	**GE68CC** GE ELECTRIC RANGE DRIP BOWLS (4-PACK) • Fits most Hotpoint® and GE electric ranges • Gives electric ranges a like-new appearance • Includes two 6" and two 8" replacement pans • Satin-chrome finish	**GE68PCS** GE ELECTRIC RANGE DRIP BOWLS (4-PACK) • Fits most Hotpoint and GE electric ranges • Gives electric ranges a like-new appearance • Includes two 6" and two 8" replacement pans • Porcelain finish
PB965	OPTIONAL UPGRADE (WB48X20862)	—	OPTIONAL UPGRADE	—	—
PB935	OPTIONAL UPGRADE (WB4820881)	—	OPTIONAL UPGRADE	—	—
JBS86	—	—	OPTIONAL UPGRADE	—	—
JB735	OPTIONAL UPGRADE (WB48X20881)	—	OPTIONAL UPGRADE	—	—
JB655	OPTIONAL UPGRADE (WB48X20881)	OPTIONAL UPGRADE	OPTIONAL UPGRADE	—	—
JB645	OPTIONAL UPGRADE (WB48X20881)	OPTIONAL UPGRADE	OPTIONAL UPGRADE	—	—
JB625	OPTIONAL UPGRADE (WB48X20881)	OPTIONAL UPGRADE	OPTIONAL UPGRADE	—	—
JBS60	—	OPTIONAL UPGRADE	OPTIONAL UPGRADE	—	—
JB480	—	OPTIONAL UPGRADE	OPTIONAL UPGRADE	—	—
JBS460	—	OPTIONAL UPGRADE	OPTIONAL UPGRADE	—	—
JB258	—	OPTIONAL UPGRADE	OPTIONAL UPGRADE	OPTIONAL/REPLACEMENT	OPTIONAL/REPLACEMENT
JB256	—	OPTIONAL UPGRADE	OPTIONAL UPGRADE	OPTIONAL/REPLACEMENT	OPTIONAL/REPLACEMENT
JBS360	—	—	OPTIONAL UPGRADE	OPTIONAL/REPLACEMENT	OPTIONAL/REPLACEMENT
JBS160	—	—	OPTIONAL UPGRADE	OPTIONAL/REPLACEMENT	OPTIONAL/REPLACEMENT
JAS640	—	—	OPTIONAL UPGRADE	OPTIONAL/REPLACEMENT	OPTIONAL/REPLACEMENT

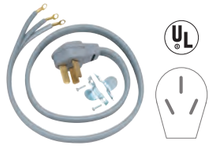







MODEL	**WX09X10006**—4' LENGTH, 40-AMP 3-WIRE ELECTRICAL RANGE CORD • 99.9% pure copper for optimal performance • Reinforced stamped brass plug blades reduce breakage and bending • Ring terminals provide dependable, secure installation • Space-saving, right-angle plug design gets range closer to the wall • Not reconditioned or repackaged	**WX09X10035**—4' LENGTH, 40-AMP 4-WIRE ELECTRICAL RANGE CORD • 99.9% pure copper for optimal performance • Reinforced stamped brass plug blades reduce breakage and bending • Ring terminals provide dependable, secure installation • Space-saving, right-angle plug design gets range closer to the wall • Not reconditioned or repackaged • Other lengths and amps available	**WB30X31057**—8" SENSI-TEMP COIL • Same performance as traditional coil element with enhanced safety performance • Can replace existing coils, interchangeable • Easy to install, no tools required	**WB30X31058**—6" SENSI-TEMP COIL • Same performance as traditional coil element with enhanced safety performance • Can replace existing coils, interchangeable • Easy to install, no tools required
PB965	OPTIONAL UPGRADE	OPTIONAL UPGRADE	—	—
PB935	OPTIONAL UPGRADE	OPTIONAL UPGRADE	—	—
JBS86	OPTIONAL UPGRADE	OPTIONAL UPGRADE	—	—
JB735	OPTIONAL UPGRADE	OPTIONAL UPGRADE	—	—
JB655	OPTIONAL UPGRADE	OPTIONAL UPGRADE	—	—
JB645	OPTIONAL UPGRADE	OPTIONAL UPGRADE	—	—
JB625	OPTIONAL UPGRADE	OPTIONAL UPGRADE	—	—
JBS60	OPTIONAL UPGRADE	OPTIONAL UPGRADE	—	—
JB480	OPTIONAL UPGRADE	OPTIONAL UPGRADE	OPTIONAL/REPLACEMENT	OPTIONAL/REPLACEMENT
JBS460	OPTIONAL UPGRADE	OPTIONAL UPGRADE	OPTIONAL/REPLACEMENT	OPTIONAL/REPLACEMENT
JB258	OPTIONAL UPGRADE	OPTIONAL UPGRADE	OPTIONAL/REPLACEMENT	OPTIONAL/REPLACEMENT
JB256	OPTIONAL UPGRADE	OPTIONAL UPGRADE	OPTIONAL/REPLACEMENT	OPTIONAL/REPLACEMENT
JBS360	OPTIONAL UPGRADE	OPTIONAL UPGRADE	OPTIONAL/REPLACEMENT	OPTIONAL/REPLACEMENT
JBS160	OPTIONAL UPGRADE	OPTIONAL UPGRADE	OPTIONAL/REPLACEMENT	OPTIONAL/REPLACEMENT
JAS640	OPTIONAL UPGRADE	OPTIONAL UPGRADE	—	—

ORDER GE PARTS AND ACCESSORIES BY CALLING 800-851-6200 OR ONLINE AT WWW.GEAPPLIANCEPARTS.COM BY USING GE PARTS ACCOUNT NUMBER.



FREE-STANDING GAS RANGES

FEATURE HIGHLIGHTS



BUILT-IN WIFI POWERED BY SmartHQ™

Connect, control and manage your oven from anywhere with your smartphone or tablet.

Visit geappliances.com/connect to learn about apps that support this appliance.



NO-PREHEAT AIR FRY

With air fry right in the oven, it's easy to cook healthier, crispier foods without the grease. Plus, there's no preheat required.



EDGE-TO-EDGE COOKTOP

A large, continuous cooking surface gives you extra room for pots and pans of all sizes and lets cookware move easily from burner to burner.



EXTRA-LARGE, INTEGRATED REVERSIBLE CAST-IRON GRILL/GRIDDLE

Enjoy ultimate cooking versatility. Cook up to six grilled cheeses on the industry's largest integrated griddle, and then flip it over to grill your favorite foods.



TRI-RING BURNER

Quickly go from gentle simmer to rapid boil with one versatile burner.



CHEF CONNECT®

Three options with a single touch. For instant convenience, choose when to automatically sync clocks and the range burners with the microwave's surface light and vent.



TRUE CONVECTION WITH PRECISE AIR

Enjoy golden-brown, perfectly even results with a third heating element and a reversing fan that provides enhanced heat and air circulation.



POWER BOIL BURNER

Prepare foods faster with intense heat that rapidly boils liquids.



DOUBLE OVEN CAPACITY

Family meals and holiday gatherings are easily conquered with two ovens that offer the largest total capacity in the industry.

The *Bluetooth*® word mark and logos are registered trademarks owned by Bluetooth SIG, Inc. and any use of such marks by GE Appliances is under license. Other trademarks and trade names are those of their respective owners.

P GE Profile™ G GE Appliances

Not all features available on all models.

FREE-STANDING GAS RANGES



PGB965

GE PROFILE™ 30" SMART DOUBLE OVEN RANGE WITH CONVECTION

- No-preheat air fry
- Reversible grill and griddle
- True Convection
- Chef Connect*
- 3 oven racks
- Center oval burner
- Self-clean with Steam Clean
- Heavy duty, dishwasher-safe grates
- 20,000-BTU Tri-ring burner
- Heavy duty, never-scrub rack
- Built-in WiFi powered by SmartHQ™
- Precise simmer burner
- Large-capacity double oven

Fingerprint Resistant Stainless – PGB965YPFS

Black Stainless – PGB965BPTS

Perfect Match OTR Microwave: PVM9215





P2B935

GE PROFILE 30" SMART DUAL-FUEL CONVECTION RANGE WITH STORAGE DRAWER

- **No-preheat air fry**
- **Built-in WiFi powered by SmartHQ**
- **Fingerprint Resistant Stainless**
- **20,000-BTU multi-ring burner**
- **Dual Fuel**
- **Extra-large, integrated reversible cast-iron grill/griddle**
- **True Convection with Precise Air**
- 3 oven racks
- Center oval burner

Fingerprint Resistant Stainless – P2B935YPFS

Perfect Match OTR Microwave: PSA9120





JGB735

GE 30" CONVECTION RANGE

- **No-preheat air fry**
- Edge-to-edge cooktop
- Extra-large, integrated non-stick griddle
- 18,000-BTU Power Boil burner
- **Gas convection oven**
- Self-clean with Steam Clean option
- Center oval burner
- Heavy-duty, dishwasher-safe grates
- 5.0 cu. ft. oven capacity

Model shown in Slate

Stainless – JGB735SPSS

Slate – JGB735EPES

Black Slate – JGB735FPDS

White – JGB735DPWW

Black – JGB735DPBB

Perfect Match OTR Microwave: JVM6175





JGB660

GE 30" RANGE

- **Edge-to-edge cooktop**
- **18,000-BTU Power Boil burner**
- **Center oval burner**
- Extra-large, integrated non-stick griddle
- Precise Simmer burner
- Self-clean oven
- 5.0 cu. ft. oven capacity
- **Heavy-duty, dishwasher-safe grates**

Model shown in Slate

Fingerprint Resistant Stainless – JGB660YPFS

Stainless – JGB660SPSS

Slate – JGB660EPES

Black Slate – JGB660FPDS

White – JGB660DPWW

Black – JGB660DPBB

Perfect Match OTR Microwave: JVM6175





PGB935

GE PROFILE 30" CONVECTION RANGE WITH STORAGE DRAWER

- **No-preheat air fry**
- **Built-in WiFi powered by SmartHQ**
- **20,000-BTU Tri-ring burner**
- **Fingerprint Resistant Stainless**
- **Extra-large, integrated reversible cast-iron grill/griddle**
- **True Convection**
- 3 oven racks
- Center oval burner
- Self-clean with Steam Clean option

Fingerprint Resistant Stainless – PGB935YPFS

Black Stainless – PGB935BPTS

Perfect Match OTR Microwave: PVM9215





JGBS86

GE 30" DOUBLE OVEN RANGE WITH CONVECTION

- Edge-to-edge cooktop
- 15,000-BTU Power Boil burner
- Extra-large, integrated non-stick griddle
- 10,000-BTU oval burner
- Steam Clean
- In-oven broil
- **Large-capacity double oven**
- Precise Simmer burner
- Heavy-duty, dishwasher-safe grates

Stainless – JGBS86SPSS

Perfect Match OTR Microwave: JVM7195





JGB645

GE 30" RANGE

- **Two-piece, continuous edge-to-edge cooktop**
- **15,000-BTU Power Boil burner**
- Precise Simmer burner
- **Self-clean oven**
- **Heavy-duty, dishwasher-safe grates**
- **5.0 cu. ft. oven capacity**
- Sealed cooktop burners

Stainless – JGB645SEKSS

Perfect Match OTR Microwave: JVM6172





JGB635

GE 30" RANGE

- 13,000-BTU burner
- Black matte steel grates
- Precise Simmer burner
- Self-clean oven
- 5.0 cu. ft. oven capacity
- Sealed cooktop burners
- In-oven broil

Stainless – JGB635REKSS

White – JGB635DEKWW

Black – JGB635DEKBB

Perfect Match OTR Microwave: JVM3160



*Chef Connect functionality available only when pairing to compatible over-the-range microwave ovens and hoods.
Complete features and specifications on pages 336-339.
See pages 132-133 for free-standing gas range parts & accessories.
See page 277 for Accessibility Requirements.
Bold = feature upgrade from previous model.
For definitions of logos, see page 9.
The *Bluetooth*® word mark and logos are registered trademarks owned by Bluetooth SIG, Inc. and any use of such marks by GE Appliances is under license. Other trademarks and trade names are those of their respective owners.

FREE-STANDING GAS RANGES



JGBS66

GE 30" RANGE WITH BROILER DRAWER

- **Edge-to-edge cooktop**
- **Extra-large, integrated non-stick griddle**
- **15,000-BTU Power Boil burner**
- **Center oval burner**
- **Steam Clean**
- Precise Simmer burner
- **Heavy-cast, dishwasher-safe grates**
- **5.0 cu. ft. oven capacity**
- Sealed cooktop burners

Stainless – JGBS66REKSS
Slate – JGBS66EEKES
Black Slate – JGBS66FEKDS
White – JGBS66DEKWW
Black – JGBS66DEKBB

Perfect Match OTR Microwave: JVM3160



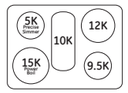



JGBS61

GE 30" RANGE

- **Continuous grates**
- 13,000-BTU burner
- Precise Simmer burner
- Sealed cooktop burners
- Black matte steel, cast-iron grates
- Standard-clean oven
- 4.8 cu. ft. oven capacity
- Flexible broiling

Stainless – JGBS61RPSS
White – JGBS61DPWW
Black – JGSB61DPBB

Perfect Match OTR Microwave: JVM3160







Model shown in White

JGBS10

GE 30" RANGE WITH BROILER DRAWER

- **4.8 cu. ft. oven capacity**
- Standard-clean oven
- Flexible broiling
- Black gloss steel grates
- Sealed cooktop burners

White – JGBS10DEMWW
Black – JGBS10DEMBB

Perfect Match Ventilation: JVX3300







JGAS640

GE 24" RANGE

- Front controls
- Edge-to-edge cooktop with heavy-cast grates
- In-oven broil
- Sealed cooktop burners
- Steam Clean
- Modular backguard

Stainless – JGAS640RMSS

Perfect Match Ventilation: JVX3240







Model shown in White

JGBS60

GE 30" RANGE WITH BROILER DRAWER

- 13,000-BTU burner
- Precise Simmer burner
- Sealed cooktop burners
- **Black matte steel grates**
- Standard-clean oven
- 4.8 cu. ft. oven capacity
- Flexible broiling
- Electronic clock and timer

Stainless – JGBS60REKSS
White – JGBS60DEKWW
Bisque – JGBS60DEKCC
Black – JGBS60DEKBB

Perfect Match OTR Microwave: JVM3160







JGBS30

GE 30" RANGE

- 13,000-BTU burner
- Big view window
- Precise Simmer burner
- Sealed cooktop burners
- Black gloss steel grates
- 4.8 cu. ft. oven capacity

Stainless – JGBS30REKSS
White – JGBS30DEKWW
Black – JGBS30DEKBB

Perfect Match OTR Microwave: JVM3160





Complete features and specifications on pages 338-339.
See pages 132-133 for free-standing gas range parts & accessories.
See page 277 for Accessibility Requirements.
Bold = feature upgrade from previous model.
For definitions of logos, see page 9.

FREE-STANDING GAS RANGE PARTS & ACCESSORIES







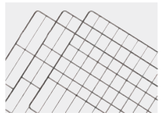



MODEL	**JXGRILL1/ WB31X24998** REVERSIBLE CAST-IRON GRIDDLE/GRILL	**WB31X24738** NON-STICK ALUMINUM GRIDDLE	**JXGRATE1/ WB31X27150** CENTER GRATE	**JXRACK3G*** SELF-CLEAN OVEN RACKS—3 PACK	**WB48X20990 OR WB48X21543** NEVER-SCRUB ROLLER RACK
	• Cast iron • Interlocks with grates • Reversible	• Heavy-duty, cast-iron construction • Interlocks with grates	• Middle grate • Ideal for cooking with odd-sized cookware • Accommodates the dual-purpose center burner	• 3-pack of racks • 23" H x 15-1/2" W x 3/16" D • Works with both self-clean and Steam Clean settings	• Easily remove even the heaviest dishes with a roller rack that's engineered to glide seamlessly out of the oven
PGB965	**INCLUDED**	OPTIONAL UPGRADE	**INCLUDED**	OPTIONAL/ REPLACEMENT	**INCLUDED**
P2B935	**INCLUDED**	OPTIONAL UPGRADE	**INCLUDED**	OPTIONAL/ REPLACEMENT	OPTIONAL UPGRADE (WB48X20990)
PGB935	**INCLUDED**	OPTIONAL UPGRADE	**INCLUDED**	OPTIONAL/ REPLACEMENT	OPTIONAL UPGRADE (WB48X21543)
JGBS86	OPTIONAL UPGRADE	**INCLUDED**	OPTIONAL UPGRADE	OPTIONAL/ REPLACEMENT	OPTIONAL UPGRADE (WB48X21543)
JGB735	OPTIONAL UPGRADE	**INCLUDED**	OPTIONAL UPGRADE	OPTIONAL/ REPLACEMENT	OPTIONAL UPGRADE (WB48X21543)
JGB660	OPTIONAL UPGRADE	**INCLUDED**	OPTIONAL UPGRADE	OPTIONAL/ REPLACEMENT	OPTIONAL UPGRADE (WB48X21543)
JGB645	—	—	—	OPTIONAL/ REPLACEMENT	OPTIONAL UPGRADE (WB48X21543)
JGB450	—	—	—	OPTIONAL/ REPLACEMENT	OPTIONAL UPGRADE (WB48X21543)
JGB635	—	—	—	OPTIONAL/ REPLACEMENT	OPTIONAL UPGRADE (WB48X21543)
JGBS66	OPTIONAL UPGRADE	**INCLUDED**	OPTIONAL UPGRADE	*	—
JGBS61	—	—	—	—	—
JGBS60	—	—	—	—	—
JGBS30	—	—	—	—	—
JGBS10	—	—	—	—	—
JGAS640	—	—	—	—	—

*For more information, see product specs.









WB48X10056 UNIVERSAL BROILER PAN/RACK SET	**WB48X5108** ROASTING RACK	**PM15X113** 4' UNIVERSAL GAS RANGE CONNECTION WITH AUTO SHUTOFF KIT	**PM15X103** 4' UNIVERSAL GAS RANGE INSTALLATION KIT
• Two piece, porcelain-coated • Dishwasher-safe • 12-3/4" x 16-1/2"	• Designed to accompany universal broiler pan (WB48X10056G and WB48X10056) • Raised rack design allows juices to flow away from the food	• Includes step-by-step instructions • Helps prevent a hazardous buildup of gas • For indoor and outdoor use	• Fits most major brands • For indoor or outdoor use • Easy to install
APPLIES TO ALL FREE-STANDING GAS RANGES	**APPLIES TO ALL FREE-STANDING GAS RANGES**	**APPLIES TO ALL FREE-STANDING GAS RANGES**	**APPLIES TO ALL FREE-STANDING GAS RANGES**

ORDER GE PARTS AND ACCESSORIES BY CALLING 800-851-6200 OR ONLINE AT WWW.GEAPPLIANCEPARTS.COM BY USING GE PARTS ACCOUNT NUMBER.



FEATURE HIGHLIGHTS

ADVANTIUM® OVENS



SPEEDCOOK OVEN

Impress last-minute dinner guests with Advantium cooking technology that delivers oven-quality results two- to eight-times faster than a conventional oven.



MULTIPLE COOKING FUNCTIONS

Expand your cooking versatility with True European Convection, Sensor Microwave, Broil, Warming/Proofing Oven, and Precision Cook Oven options all in one oven.



NO PREHEATING REQUIRED

Start cooking as soon as inspiration strikes with powerful halogen bulbs that produce nearly instantaneous heat and eliminate preheating.



CUSTOM RECIPE SAVER

Favorite recipes are always close at hand with a feature that allows you to store cooking instructions for up to 30 different dishes.



175+ PREPROGRAMMED MENU SELECTIONS

Quickly find the selection you need with a menu that organizes dishes into 12 convenient categories.



BACKLIT CONTROLS

Digital readouts are easy to read and maintain a modern appearance.

MICROWAVE OVENS



SENSOR COOKING CONTROLS

Automatically adjusts time and power for delicious cooking results.



STEAM CLEAN

Messes inside the microwave are easy to wipe away after steam loosens food grime.



CONVECTION

Choose this setting when baking or browning is desired.

P GE Profile™ G GE Appliances

Not all features available on all models.

OVER-THE-RANGE OVENS WITH ADVANTIUM® TECHNOLOGY



PSA9240

GE PROFILE™ 1.7 CU. FT. CAPACITY OVEN WITH ADVANTIUM TECHNOLOGY

- **Speedcook oven (240V)**
- Multiple cooking functions
- **True European Convection**
- No preheating required
- Over 175 preprogrammed menu selections
- Custom Recipe Saver
- Backlit controls
- **Speedcooking grill tray**
- Three-speed, 300-CFM venting system

Stainless – PSA9240SPSS



PSA9120

GE PROFILE 1.7 CU. FT. CAPACITY OVEN WITH ADVANTIUM TECHNOLOGY

- **Speedcook oven (120V)**
- **Multiple cooking functions**
- **No preheating required**
- **Over 175 preprogrammed menu selections**
- **Custom Recipe Saver**
- **Backlit controls**
- Three-speed, 300-CFM venting system

Stainless – PSA9120SPSS

Complete features and specifications on pages 340-343.
Bold = feature upgrade from previous model.
For definitions of logos, see page 9.

OVER-THE-RANGE MICROWAVE OVENS



PVM9179

GE PROFILE 1.7 CU. FT. CAPACITY CONVECTION OVEN

- 950 watts (IEC-705 test procedure)
- **Fast Cook**
- Sensor cooking controls
- Chef Connect
- LED cooktop lighting
- Easy-clean interior with steam clean
- **Convection rack**
- My Cycle

Stainless – PVM9179SKSS
Black Stainless – PVM9179BLTS
Slate – PVM9179EKES
Black Slate – PVM9179FLDS
White – PVM9179DKWW
Black – PVM9179DKBB



PVM9005

GE PROFILE 2.1 CU. FT. CAPACITY SENSOR OVEN

- 1,050 watts (IEC-705 test procedure)
- Chef Connect
- **Bottom control with integrated handle**
- Four-speed, 400-CFM venting system
- 10 power levels
- "Add 30 seconds" button

Stainless – PVM9005SJSS
Black Stainless – PVM9005BLTS
Slate – PVM9005EJES
Black Slate – PVM9005FMDS



PVM9215

GE PROFILE 2.1 CU. FT. CAPACITY SENSOR OVEN

- 1,000 watts (IEC-705 test procedure)
- Easy-clean interior with steam clean
- **Chef Connect**
- Weight and time defrost
- **LED cooktop lighting**
- **Four-speed with boost, 400-CFM venting system**
- **My Cycle**
- Turntable on/off

Stainless – PVM9215SKSS

RECIRCULATING MODEL

Stainless – PNM9216SKSS



Model shown in Slate

JVM7195

GE 1.9 CU. FT. CAPACITY SENSOR OVEN

- 1,000 watts (IEC-705 test procedure)
- **Easy-clean interior with steam clean**
- Melt
- Weight and time defrost
- **Four-speed, 400-CFM venting system**
- Turntable on/off

Stainless – JVM7195SKSS
Black Stainless – JVM7195BLTS
Slate – JVM7195EKES
Black Slate – JVM7195FLDS
White – JVM7195DKWW
Black – JVM7195DKBB

RECIRCULATING MODELS

Stainless – JNM7196SKSS
Black Stainless – JNM7196BLTS
Black Slate – JNM7196FLDS
White – JNM7196DKWW
Black – JNM7196DKBB

The *Bluetooth*® word mark and logos are registered trademarks owned by Bluetooth SIG, Inc. and any use of such marks by GE Appliances is under license. Other trademarks and trade names are those of their respective owners.

OVER-THE-RANGE MICROWAVE OVENS



JVM6175

GE 1.7 CU. FT. CAPACITY SENSOR OVEN

- Fingerprint resistant options
- 1,000 watts (IEC-705 test procedure)
- **Weight and time defrost**
- "Add 30 seconds" button
- Melt
- Two-speed, 300-CFM venting system
- Turntable on/off

Stainless – JVM6175SKSS
Fingerprint Resistant Stainless – JVM6175YKFS
Black Stainless – JVM6175BLTS
Slate – JVM6175EKES
White – JVM6175DKWW
Black – JVM6175DKBB



JVM6172

GE 1.7 CU. FT. CAPACITY OVEN

- 1,000 watts (IEC-705 test procedure)
- Convenience cooking controls
- "Add 30 seconds" button
- Weight and time defrost
- **Turntable on/off**
- Two-speed, 300-CFM venting system
- 10 power levels

Stainless – JVM6172SKSS
White – JVM6172DKWW
Black – JVM6172DKBB



CONTRACT FOCUS

JVM3162

GE 1.6 CU. FT. CAPACITY OVEN

- 950 watts (IEC-705 test procedure)
- Convenience cooking controls
- Auto and time defrost
- Turntable on/off
- Two-speed, 300-CFM venting system
- "Add 30 seconds" button
- 10 power levels

Stainless/Black – JVM3162RJSS
White – JVM3162DJWW
Black – JVM3162DJBB

RECIRCULATING MODELS

Stainless/Black – JNM3163RJSS
White – JNM3163DJWW
Black – JNM3163DJBB



JVM3160

GE 1.6 CU. FT. CAPACITY OVEN

- **1,000 watts (IEC-705 test procedure)**
- Convenience cooking controls
- Auto and time defrost
- Turntable on/off
- Two-speed, 300-CFM venting system

Stainless/Black – JVM3160RFSS
Slate – JVM3160EFES
White – JVM3160DFWW
Bisque – JVM3160DFCC
Black – JVM3160DFBB

Complete features and specifications on pages 342-343.
Bold = feature upgrade from previous model.

ADVANTIUM® AND MICROWAVE PARTS & ACCESSORIES



MODEL	JX36 36" FILLER KIT • Microwave Filler Kit to allow a standard 30" microwave to fit into a 36" opening • Parts included: 2 trim kit side mounts, 2 installation screws, 1 connection bar	JX15BUMP 15" CABINETRY BUMP OUT KIT • Wall bracket that extends the unit forward by 3" • To be used for any 13"-16" cabinets that are deeper than specified • Approximate dimensions are 30"W x 16.25"H x 3"D
PSA9240SPSS	JX36BSS	JX15BUMPBB
PSA9120SPSS	JX36BSS	JX15BUMPBB
PVM9179BLTS	JX36BTS	JX15BUMPBB
PVM9179SKSS	JX36BSS	JX15BUMPBB
PVM9179EKES	JX36BES	JX15BUMPBB
PVM9179DKWW	JX36BWW	JX15BUMPWW
PVM9179DKBB	JX36BBB	JX15BUMPBB
PVM9005BLTS		JX15BUMPBB
PVM9005SJSS		JX15BUMPBB
PVM9005EJES		JX15BUMPBB
PVM9215SKSS	JX36BSS	JX15BUMPBB
PNM9216SKSS	JX36BSS	JX15BUMPBB
JNM7196BLTS	JX36BTS	JX15BUMPBB
JNM7196SKSS	JX36BSS	JX15BUMPBB
JNM7196DKWW	JX36BWW	JX15BUMPWW
JNM7196DKBB	JX36BBB	JX15BUMPBB
JVM7195BLTS	JX36BTS	JX15BUMPBB
JVM7195SKSS	JX36BSS	JX15BUMPBB
JVM7195EKES	JX36BES	JX15BUMPBB
JVM7195DKWW	JX36BWW	JX15BUMPWW
JVM7195DKBB	JX36BBB	JX15BUMPBB
JVM6175BLTS	JX36BTS	JX15BUMPBB
JVM6175SKSS	JX36BSS	JX15BUMPBB
JVM6175EKES	JX36BES	JX15BUMPBB
JVM6175DKWW	JX36BWW	JX15BUMPWW
JVM6175DKBB	JX36BBB	JX15BUMPBB
JVM6172SKSS	JX36BSS	JX15BUMPBB
JVM6172DKWW	JX36BWW	JX15BUMPWW
JVM6172DKBB	JX36BBB	JX15BUMPBB
JNM3163RJSS	JX36BSS	JX15BUMPBB
JNM3163DJWW	JX36BWW	JX15BUMPWW
JNM3163DJBB	JX36BBB	JX15BUMPBB
JVM3162RJSS	JX36BSS	JX15BUMPBB
JVM3162DJWW	JX36BWW	JX15BUMPWW
JVM3162DJBB	JX36BBB	JX15BUMPBB
JNM3161MFSA	JX36B	JX15BUMPBB
JVM3160RFSS	JX36B	JX15BUMPBB
JVM3160EFES	JX36B	JX15BUMPBB
JVM3160DFWW	JX36B	JX15BUMPWW
JVM3160DFCC	JX36B	
JVM3160DFBB	JX36B	JX15BUMPBB



COUNTERTOP MICROWAVE OVENS

FEATURE HIGHLIGHTS



SENSOR COOKING CONTROLS

Automatically adjusts time and power for delicious cooking results.



CONVECTION/ COMBINATION COOKING

Combines microwave with traditional radiant heat to bake and roast foods with accuracy.



SPACEMAKER® OVEN

Space-saving design frees up counter space.

P GE Profile™ G GE Appliances

Not all features available on all models.



ADA COMPLIANT*

Model shown in Black Stainless

PES7227

GE PROFILE™ 2.2 CU. FT. CAPACITY SENSOR OVEN

- **1,100 watts (IEC-705 test procedure)**
- Weight and time defrost
- Extra-large 16" turntable
- Instant On controls
- Control lockout
- "Add 30 seconds" button
- Kitchen timer

Stainless – PES7227SLSS
Black Stainless – PES7227BLTS
Slate – PES7227ELES
Black Slate – PES7227FMDS
White – PES7227DLWW
Black – PES7227DLBB

FOR COUNTERTOP APPLICATION ONLY. FOR BUILT-IN ONLY USE PEB7227 – SEE PAGE 77.



PEB9159

GE PROFILE 1.5 CU. FT. CAPACITY COUNTERTOP CONVECTION/MICROWAVE OVEN

- 1,000 watts (IEC-705 test procedure)
- Sensor cooking controls
- Warming oven
- Optional built-in trim kit (JX9152/JX9153)
- Convection rack

Stainless – PEB9159SRSS
Slate – PEB9159ERES
White – PEB9159DRWW
Black – PEB9159DRBB



PEM31

GE PROFILE 1.1 CU. FT. CAPACITY SPACEMAKER® OVEN

- 800 watts (IEC-705 test procedure)
- Optional built-in trim kit (JX827/JX830)
- Optional hanging kit (JXA019K)
- Sensor cooking controls
- Weight and time defrost
- Turntable on/off

Stainless – PEM31SFSS
Black Stainless – PEM31BMTS
Slate – PEM31EFES
Black Slate – PEM31FMDS
White – PEM31DFWW
Black – PEM31DFBB



JES2251

GE PROFILE 2.2 CU. FT. CAPACITY INVERTER OVEN

- 1,200 watts (IEC-705 test procedure)
- Sensor cooking controls
- Full stainless steel exterior
- Auto and time defrost
- Extra-large 16" turntable
- Instant On controls
- Control lockout

Stainless – JES2251SJSS

*Only applicable under ADA-compliant installation.
Complete features and specifications on pages 309-310 and 344-345.
See page 277 for Accessibility Requirements. Note: Model can be ADA/UFAS compliant in countertop or built-in configuration.
For built-in, please see installation information for individual models.
Bold = feature upgrade from previous model.
For definitions of logos, see page 9.

COUNTERTOP MICROWAVE OVENS



JES2051

Model shown in Black

GE 2.0 CU. FT. CAPACITY SENSOR OVEN

- **1,200 watts (IEC-705 test procedure)**
- Auto and time defrost
- Extra-large 16" turntable
- Instant On controls
- Control lockout
- Timer on/off

Stainless – JES2051SNSS
White – JES2051DNWW
Black – JES2051DNBB



JES1657

GE 1.6 CU. FT. CAPACITY SENSOR OVEN

- **1,150 watts (IEC-705 test procedure)**
- Weight and time defrost
- Turntable
- Instant On controls
- Control lockout
- Timer on/off

Stainless – JES1657SMSS
Black Stainless – JES1657BMTS
White – JES1657DMWW
Black – JES1657DMBB



JES1097

GE 0.9 CU. FT. CAPACITY SMART OVEN WITH SCAN-TO-COOK TECHNOLOGY

- 900 watts (IEC-705 test procedure)
- Convenience cooking controls
- Auto and time defrost
- Turntable
- Control lockout
- Kitchen timer

Stainless – JES1097SMSS

Smart



JES1095

Model shown in Black Stainless

GE 0.9 CU. FT. CAPACITY OVEN

- **900 watts (IEC-705 test procedure)**
- **Convenience cooking controls**
- **Auto and time defrost**
- **Turntable**
- **Control lockout**
- **Kitchen timer**

Stainless – JES1095SMSS
Black Stainless – JES1095BMTS
White – JES1095DMWW
Black – JES1095DMBB



JES1460

Model shown in White

GE 1.4 CU. FT. CAPACITY SENSOR OVEN

- **1,100 watts (IEC-705 test procedure)**
- Weight and time defrost
- Turntable
- Instant On controls
- Control lockout
- Timer on/off

White – JES1460DSWW
Black – JES1460DSBB



JES1145

GE 1.1 CU. FT. CAPACITY OVEN

- **950 watts (IEC-705 test procedure)**
- Convenience cooking controls
- Weight and time defrost
- Turntable
- Instant On controls
- Control lockout
- Kitchen timer

Stainless – JES1145SHSS
White – JES1145DLWW
Black – JES1145DMBB



JES1072

GE 0.7 CU. FT. CAPACITY OVEN

- 700 watts (IEC-705 test procedure)
- Convenience cooking controls
- Auto and time defrost
- Turntable
- Control lockout
- Kitchen timer
- Instant On controls

Stainless – JES1072SHSS
White – JES1072DMWW
Black – JES1072DMBB



JEM3072

Model shown in White

GE 0.7 CU. FT. CAPACITY SPACEMAKER® OVEN

- 700 watts (IEC-705 test procedure)
- **Optional hanging kit* (JXA019K)**
- Convenience cooking controls
- Auto and time defrost
- Turntable
- Instant On controls
- Control lockout

Stainless – JEM3072SHSS
White – JEM3072DHWW
Black – JEM3072DHBB

Complete features and specifications on pages 344-345.
*Optional undercabinet mounting kit sold separately. Refer to page 345 for installation options.
Bold = feature upgrade from previous model.
For definitions of logos, see page 9.

DISHWASHERS

Profile™

NICE AND CLEAN

Expect table-ready dishes after every cycle, thanks to a new level of washing and drying power from GE Appliances & GE Profile™. Plus, a wide range of finishes and configurations ensures the right look and fit for any kitchen.


PDP715SBNTS—See pg. 150.



PDT715SBNTS—See pg. 150.

GE APPLIANCES


GDP645SYNFS—See pg. 151.


GDT665SMNES—See pg. 151.


GDT630PFMDS—See pg. 152.


GDF535PSRSS—See pg. 154.


GDF645SSNSS—See pg. 153.


UCG1520NSS—See pg. 157.

BUILT-IN DISHWASHERS

FEATURE HIGHLIGHTS



DRY BOOST™

Using Dry Boost provides up to three times better drying.*

*Compared to heated dry option.



DEEP CLEAN SILVERWARE JETS

Producing table-ready silverware, powerful jets are directed to the locations where the silverware baskets can be placed.



TWIN TURBO DRY BOOST

Ensure a complete dry with every cycle, thanks to a dual fan system and inline heater that provide exceptional performance, even with plastics.



LEAK DEFENSE WITH ACTIVE FLOOD PROTECT

Uncommon leaks can be easily detected and contained.



PIRANHA™ HARD-FOOD DISPOSER WITH REMOVABLE FILTER

To ensure consistently clean items, this stainless steel blade rotates at 3,600 RPM to pulverize food particles.



BOTTLE JETS

Hard-to-reach areas inside tall items are now reachable, thanks to dedicated jets integrated into the upper rack that shower water deep inside for the ultimate clean.



THIRD RACK

Easily clean an entire flatware collection, knives and small utensils with a one-piece customizable rack that glides smoothly.



WASH ZONES

Wash a true half-load in either the upper or lower rack without sacrificing options and cycles available on a full wash.



BUILT-IN WIFI

Monitor performance, check status and automatically reorder detergent using your mobile device.

Visit geappliances.com/connect to learn about apps that support this appliance.

P GE Profile™ G GE Appliances

Not all features available on all models.

BUILT-IN HIDDEN CONTROLS DISHWASHERS





Model shown in Black Stainless

Third Rack included

PDT785S

GE PROFILE™ STAINLESS STEEL INTERIOR SMART DISHWASHER

- **Twin Turbo Dry Boost™**
- **Built-in WiFi powered by SmartHQ™**
- Deep Clean Silverware Jets
- Leak Defense with Active Flood Protect
- Bottle Jets
- **Third Rack**
- Piranha™ hard-food disposer
- 1-Hour Wash
- Steam + Sani
- 16 place settings
- **39 dBA**

Fingerprint Resistant Stainless – PDT785SYNFS
Black Stainless – PDT785SBNTS





Model shown in Black Stainless

Third Rack sold separately**

PDT775S

GE PROFILE STAINLESS STEEL INTERIOR SMART DISHWASHER

- **Twin Turbo Dry Boost**
- **Built-in WiFi powered by SmartHQ**
- Deep Clean Silverware Jets
- Leak Defense with Active Flood Protect
- Bottle Jets
- Piranha hard-food disposer
- 1-Hour Wash
- Steam + Sani
- 16 place settings
- **42 dBA**

Fingerprint Resistant Stainless – PDP775SYNFS
Black Stainless – PDT775SBNTS





Model shown in Slate

Third Rack included

PDT715S

GE PROFILE STAINLESS STEEL INTERIOR SMART DISHWASHER

- Dry Boost with Fan Assist
- **Deep Clean Silverware Jets**
- Bottle Jets
- Third Rack
- Steam + Sani
- Piranha hard-food disposer
- Lower rack multi-position, fold-down tines
- Adjustable full-extension smooth-glide upper rack
- 16 place settings
- WiFi optional*
- **45 dBA**

Fingerprint Resistant Stainless – PDT715SYNFS
Black Stainless – PDT715SBNTS
Slate – PDT715SMNES
Black Slate – PDT715SFNDS





Third Rack included

PDP715S

GE PROFILE STAINLESS STEEL INTERIOR SMART DISHWASHER

- Dry Boost with Fan Assist
- **Deep Clean Silverware Jets**
- Bottle Jets
- Third Rack
- Steam + Sani
- Piranha hard-food disposer
- Lower rack multi-position, fold-down tines
- Adjustable full-extension smooth-glide upper rack
- 16 place settings
- WiFi optional*
- **45 dBA**

Fingerprint Resistant Stainless – PDP715SYNFS
Black Stainless – PDP715SBNTS

See page 277 for Accessibility Requirements.
Complete features and specifications on pages 346-348.

Bold = feature upgrade from previous model.
For definitions of logos, see page 9.





Model shown in Black Slate

Third Rack included

GDT665S

GE STAINLESS STEEL INTERIOR SMART DISHWASHER

- Dry Boost with Fan Assist
- Bottle Jets
- **Third Rack**
- Steam + Sani
- 1-Hour Wash
- **Adjustable full-extension smooth-glide upper rack**
- AutoSense cycle
- 16 place settings
- WiFi optional*
- 46 dBA

Stainless – GDT665SSNSS
Slate – GDT665SMNES
Black Slate – GDT665SFNDS
White – GDT665SGNWW
Black – GDT665SGNBB





Third Rack included

GDP665S

GE STAINLESS STEEL INTERIOR SMART DISHWASHER

- Dry Boost with Fan Assist
- Bottle Jets
- **Third Rack**
- Steam + Sani
- 1-Hour Wash
- **Adjustable full-extension smooth-glide upper rack**
- AutoSense cycle
- 16 place settings
- WiFi optional*
- 46 dBA

Fingerprint Resistant Stainless – GDP665SYNFS





GDT645S

GE STAINLESS STEEL INTERIOR SMART DISHWASHER

- Dry Boost with Fan Assist
- **Bottle Jets**
- Wash Zones
- Steam + Sani
- 1-Hour Wash
- Manual + adjustable upper rack
- Piranha hard-food disposer
- AutoSense cycle
- 16 place settings
- WiFi optional*
- 48 dBA

Stainless – GDT645SSNSS
Fingerprint Resistant Stainless – GDT645SYNFS
Slate – GDT645SMNES
Black Slate – GDT645SFNDS
White – GDT645SGNWW
Black – GDT645SGNBB





GDP645S

GE STAINLESS STEEL INTERIOR SMART DISHWASHER

- Dry Boost with Fan Assist
- **Bottle Jets**
- Wash Zones
- Steam + Sani
- 1-Hour Wash
- Manual + adjustable upper rack
- Piranha hard-food disposer
- AutoSense cycle
- 16 place settings
- WiFi optional*
- 48 dBA

Fingerprint Resistant Stainless – GDP645SYNFS

*SmartHQ Connect Module is required and sold separately. It is available for order on geappliances.com, part number PBX23W00Y0.
**Optional Third Rack sold separately. See page 161.

BUILT-IN HIDDEN CONTROLS DISHWASHERS





GDT565S

GE STAINLESS STEEL INTERIOR SMART DISHWASHER

- Dry Boost™
- Clean touch controls
- Piranha™ hard-food disposer
- Steam + Sani
- Nylon racks
- Heavy Wash
- Active Flood Protect
- 1-Hour Wash
- 14 place settings
- WiFi optional*
- 50 dBA

Stainless – GDT565SSNSS





GDT635H

GE HYBRID STAINLESS STEEL INTERIOR SMART DISHWASHER

- **Built-in WiFi powered by SmartHQ™**
- Dry Boost
- 4 Bottle Jets
- Steam + Sani
- Wash Zones
- Active Flood Protect
- Manual + adjustable upper rack
- Piranha hard-food disposer
- 1-Hour Wash
- AutoSense cycle
- 48 dBA

Stainless – GDT635HSMSS



Third Rack sold separately**





Third Rack included

GDT630P

GE PLASTIC INTERIOR SMART DISHWASHER

- **Third Rack**
- Dry Boost
- 4 Bottle Jets
- Wash Zones
- Three-level 600 Series Wash System
- Steam + Sani
- Piranha hard-food disposer
- Adjustable upper rack
- 1-Hour Wash
- WiFi optional*
- 50 dBA

Stainless – GDT630PSMSS
Slate – GDT630PMMES
Black Slate – GDT630PFMDS
White – GDT630PGMWW
Black – GDT630PGMBB
Fingerprint Resistant Stainless Steel GDT630PYMFS



Model shown in Black Slate



Third Rack sold separately**

GDT605P

GE PLASTIC INTERIOR SMART DISHWASHER

- Dry Boost
- **4 Bottle Jets**
- Steam + Sani
- Wash Zones
- Three-level 600 Series wash system
- Manual + adjustable upper rack
- Piranha hard-food disposer
- 1-Hour Wash
- AutoSense cycle
- WiFi optional*
- 50 dBA

Stainless – GDT605PSMSS
Slate – GDT605PMMES
Black Slate – GDT605PFMDS
White – GDT605PGMWW
Black – GDT605PGMBB

Complete features and specifications on pages 348-351.
See page 277 for Accessibility Requirements.

Bold = feature upgrade from previous model.
For definitions of logos, see page 9.





Model shown in Slate

GDT530P

GE PLASTIC INTERIOR SMART DISHWASHER

- Dry Boost
- **Steam + Sani**
- 1-Hour Wash
- **AutoSense cycle**
- Piranha hard-food disposer
- Nylon racks
- Adjustable upper rack
- 1- to 12-hour Delay Start
- WiFi optional*
- 16 place settings
- 54 dBA

Stainless – GDT530PSPSS
Slate – GDT530PMPES
White – GDT530PGPWW
Black – GDT530PGPBB





GDT535P

GE PLASTIC INTERIOR SMART DISHWASHER

- Dry Boost
- Steam + Sani
- Active Flood Protect
- Piranha hard-food disposer
- 1-Hour Wash
- Automatic Hot Start
- Cabinet-depth flush install
- Built-up-floor capable
- WiFi optional*
- 59 dBA

Stainless – GDT535PSMSS

BUILT-IN FRONT CONTROL DISHWASHERS





Model shown in Slate

GDF645S

GE STAINLESS STEEL INTERIOR SMART DISHWASHER

- Dry Boost with Fan Assist
- Bottle Jets
- Wash Zones
- Steam + Sani
- 1-Hour Wash
- Manual + adjustable upper rack
- Piranha hard-food disposer
- AutoSense cycle
- 16 place settings
- WiFi optional*
- 48 dBA

Stainless – GDF645SSNSS
Slate – GDF645SMNES
White – GDF645SGNWW
Black – GDF645SGNBB





GDF565S

GE STAINLESS STEEL INTERIOR SMART DISHWASHER

- Dry Boost
- Clean touch controls
- Piranha hard-food disposer
- Steam + Sani
- Nylon racks
- Heavy Wash
- Active Flood Protect
- 1-Hour Wash
- 14 place settings
- WiFi optional*
- 50 dBA

Stainless – GDF565SSNSS

*SmartHQ Connect Module is required and sold separately.
It is available for order on geappliances.com, part number PBX23W00Y0.
**Optional Third Rack sold separately. See page 161.

BUILT-IN FRONT CONTROL DISHWASHERS





Model shown in Slate

GDF630P

GE PLASTIC INTERIOR SMART DISHWASHER

- **Third Rack**
- Dry Boost
- **4 Bottle Jets**
- **Wash Zones**
- Steam + Sani
- Piranha™ hard-food disposer
- Manual + adjustable upper rack
- 1-Hour Wash
- WiFi optional*
- 50 dBA

Stainless – GDF630PSMSS
Slate – GDF630PMMES
White – GDF630PGMWW
Black – GDF630PGMBB



Third Rack Included





GDF530P

GE PLASTIC INTERIOR SMART DISHWASHER

- Dry Boost
- **Steam + Sani**
- Piranha hard-food disposer
- **Nylon racks**
- 1-Hour Wash
- AutoSense cycle
- **Manual + adjustable upper rack**
- WiFi optional*
- 54 dBA

Stainless – GDF530PSMSS
Slate – GDF530PMMES
White – GDF530PGMWW
Black – GDF530PGMBB



Third Rack sold separately**





Model shown in White

GDF450P

GE PLASTIC INTERIOR SMART DISHWASHER

- Heavy Wash with Dry Boost
- Normal Wash with Heated Dry
- Active Flood Protect
- Piranha hard-food disposer
- 1-Hour Wash
- Cabinet-depth flush install
- Built-up-floor capable
- WiFi optional*
- 60 dBA

Stainless – GDF450PSRSS
White – GDF450PGRWW
Black – GDF450PGRBB





Model shown in Black

GSD2100V

GE PLASTIC INTERIOR DISHWASHER

- 2-level wash system
- 2-stage filtration with extra-fine filter
- Piranha hard-food disposer
- Hot Start option
- Rinse only
- Short wash
- 5 cycles/2 options
- Up to 12-place-setting capacity racking
- 64 dBA

White – GSD2100VWW
Bisque – GSD2100VCC
Black – GSD2100VBB





GDF535P

GE PLASTIC INTERIOR SMART DISHWASHER

- Dry Boost
- **Steam + Sani**
- Active Flood Protect
- Piranha hard-food disposer
- 1-Hour Wash
- Heavy Wash
- Cabinet-depth flush install
- WiFi optional*
- **55 dBA**

Stainless – GDF535PSRSS
White – GDF535PGRWW
Bisque – GDF535PGRCC
Black – GDF535PGRBB





Model shown in White

GDF510P

GE PLASTIC INTERIOR SMART DISHWASHER

- Dry Boost
- Active Flood Protect
- Piranha hard-food disposer
- 1-Hour Wash
- Heavy Wash
- Cabinet-depth flush install
- Built-up-floor capable
- WiFi optional*
- 59 dBA

Stainless – GDF510PSRSS
White – GDF510PGRWW
Black – GDF510PGRBB
Stainless – GDF511PSRSS (with power cord)
White – GDF511PGRWW (with power cord)
Black – GDF511PGRBB (with power cord)

Complete features and specifications on pages 350-352.
See page 277 for Accessibility Requirements.
Bold = feature upgrade from previous model.
For definitions of logos, see page 9.

*SmartHQ™ Connect Module is required and sold separately. It is available for order on geappliances.com, part number PBX23W00Y0.
**Optional Third Rack sold separately. See page 161.

GE SPACEMAKER® DISHWASHERS





Model shown in White



GSM2200V

GE PLASTIC INTERIOR UNDER-THE-SINK DISHWASHER

- Spacemaker upper rack
- 2-stage filtration with extra-fine filter
- Piranha™ hard-food disposer
- Hot Start option
- Deluxe silverware basket
- 64 dBA

Stainless – GSM2260VSS
White – GSM2200VWW
Black – GSM2200VBB





GDT226S

GE STAINLESS STEEL INTERIOR SMART DISHWASHER

- ADA compliant with low-profile installation
- 3-level wash
- AutoSense cycle
- Piranha hard-food disposer with removable filter
- Sanitize option (NSF 184 Certified)
- WiFi optional*
- 51 dBA

Stainless – GDT226SSLSS
White – GDT226SGLWW
Black – GDT226SGLBB
Panel-ready – GDT226SILII (Available July 2021)





GDT225S

GE STAINLESS STEEL INTERIOR SMART DISHWASHER

- ADA compliant
- 3-level wash
- AutoSense cycle
- Piranha hard-food disposer with removable filter
- WiFi optional*
- 51 dBA

Stainless – GDT225SSLSS
White – GDT225SGLWW
Black – GDT225SGLBB





PDT145S

GE PROFILE™ 18" BUILT-IN SMART DISHWASHER

- ADA compliant
- 3-level wash
- AutoSense cycle
- Piranha hard-food disposer with removable filter
- WiFi optional*
- 47 dBA

Stainless – PDT145SSLSS
White – PDT145SGLWW
Black – PDT145SGLBB

Complete features and specifications on pages 350, 352-355.
See page 277 for Accessibility Requirements.
Bold = feature upgrade from previous model.
For definitions of logos, see page 9.

NSF (National Sanitation Foundation)
*SmartHQ™ Connect Module is required and sold separately. It is available for order on geappliances.com, part number PBX23W00Y0.

PORTABLE DISHWASHERS





GPT225S

GE STAINLESS INTERIOR PORTABLE SMART DISHWASHER

- AutoSense cycle
- Piranha hard-food disposer with removable filter
- Sanitize option (NSF 184 Certified)
- 3-level wash
- WiFi optional*
- 54 dBA

Stainless – GPT225SSLSS
White – GPT225SGLWW
Black – GPT225SGLBB





GPT145S

GE STAINLESS INTERIOR PORTABLE SMART DISHWASHER

- AutoSense cycle
- Piranha hard-food disposer with removable filter
- Sanitize option (NSF 184 Certified)
- 3-level wash
- WiFi optional*
- 52 dBA

Stainless – GPT145SSLSS

COMPACTOR



UCG1520N

BUILT-IN COMPACTOR

- Hidden controls
- Built-in only
- 1.4 cu. ft. capacity
- 1/3 HP
- Removable key lock
- Toe pedal opener
- Reduces volume by 75%

Stainless – UCG1520NSS
White – UCG1500NWW
Black – UCG1500NBB
Panel-ready – UCG1510NII



DISPOSERS

FEATURE HIGHLIGHTS



POWER GRINDING MOTOR

Quickly hits max speed and high torque so foods are less likely to jam or clog.



STAINLESS STEEL GRINDING BLADES AND TURNTABLE

Made with heavy-duty steel to last for years.



SEPTIC SAFE

Guaranteed to be safe for your septic system.

P GE Profile™ G GE Appliances

Not all features available on all models.

DISPOSERS



GFC1020N

GE CONTINUOUS-FEED DISPOSER

- **Power Grinding 1 HP motor**
- **Over 2,800 RPM**
- Easy Mount Installation
- 3-bolt-mount adapter kit Included
- Drain-Boost technology
- Stainless steel grinding components
- Optional accessory power cord sold separately (model WC12X10002)



GFC720N

GE CONTINUOUS-FEED DISPOSER

- **Power Grinding 3/4 HP motor**
- **Over 2,700 RPM**
- Easy Mount Installation
- 3-bolt-mount adapter kit Included
- Drain-Boost technology
- Stainless steel grinding components
- Optional accessory power cord sold separately (model WC12X10002)



GFC530N

GE CONTINUOUS-FEED DISPOSER

- Power Grinding 1/2 HP motor
- Over 2,600 RPM
- Easy Mount Installation
- 3-bolt-mount adapter kit Included
- Drain-Boost technology
- **Stainless steel grinding components**
- Optional accessory power cord sold separately (model WC12X10002)

GFC535N

Similar to GFC530N with attached power cord.



GFC520N

GE CONTINUOUS-FEED DISPOSER

- **Power Grinding 1/2 HP motor**
- **Over 2,600 RPM**
- Easy Mount Installation
- 3-bolt-mount adapter kit Included
- Drain-Boost technology
- Galvanized steel grinding blades
- Optional accessory power cord sold separately (model WC12X10002)

GFC525N

Similar to GFC520N with attached power cord.



GREEN05P

GE CONTINUOUS-FEED DISPOSER

- Power Grinding 1/2 HP motor
- Over 2,600 RPM
- 3-bolt-mount design
- Attached power cord
- Simple, easy install for homeowners
- High-power, finer grind
- Jam-free guarantee*
- Stainless steel grinding components



GFC320N

GE CONTINUOUS-FEED DISPOSER

- Power Grinding 1/3 HP motor
- Over 2,300 RPM
- Easy Mount Installation
- 3-bolt-mount adapter kit Included
- Drain-Boost technology
- Galvanized steel grinding blades
- Optional accessory power cord sold separately (model WC12X10002)

GFC325N

Similar to GFC320N with attached power cord.



GFB760N

GE BATCH-FEED DISPOSER

- Power Grinding 3/4 HP motor
- Over 2,700 RPM
- Magnetic sink stopper for activation
- Easy Mount Installation
- 3-bolt-mount adapter kit Included
- Drain-Boost technology
- Stainless steel grinding components
- Optional accessory power cord sold separately (model WC12X10002)

Note: For all corded models an Optional accessory 3-bolt-mount adapter kit (PM3X214) is sold separately.

*Applies when used according to owner's manual.
Complete features and specifications on page 355.
Bold = feature upgrade from previous model.

DISHWASHER PARTS & ACCESSORIES













MODEL	PM28X329 6′ UNIVERSAL DISHWASHER INSTALLATION KIT	PM28X326—6′ WX28X327—12′ UNIVERSAL DISHWASHER CONNECTOR KIT WITH ADAPTER	WX09X70911—7.9′ WX09X70910—5.4′ UNIVERSAL 3-PRONG POWER CORD FOR BUILT-IN DISHWASHERS	WD24X10065 12′ DISHWASHER DRAIN HOSE	WX28X329 DISHWASHER GARDEN HOSE ELBOW	WX28X321 10′ DISHWASHER DRAIN HOSE
	• Safely installs any dishwasher • Includes universal 3-wire power cord and 6′ connector • UL® listed	• Braided polymer for superior bursting strength and chemical resistance • Includes garden hose connector • Fits most major brands of dishwashers	• Universal design fits most major brands • Includes all needed hardware for installation • UL listed	• Fast installation for dishwasher within 12 ft. of drain/water access	• 3/8″ compression x 3/4″ garden hose 90° elbow to connect water supply	• Please search by your appliance model number to ensure this part will fit your appliance • Small-port 10-ft. drain hose / 10-ft. universal connector kit • 10-ft. drain hose: For standard tub dishwashers • Easy installation for dishwasher within 10-ft. of drain/water access
PDT785S	OPTIONAL	OPTIONAL	OPTIONAL	OPTIONAL	OPTIONAL	—
PDT775S	OPTIONAL	OPTIONAL	OPTIONAL	OPTIONAL	OPTIONAL	—
PDT715S	OPTIONAL	OPTIONAL	OPTIONAL	OPTIONAL	OPTIONAL	—
PDP715S	OPTIONAL	OPTIONAL	OPTIONAL	OPTIONAL	OPTIONAL	—
GD9695	OPTIONAL	OPTIONAL	OPTIONAL	OPTIONAL	OPTIONAL	—
GDT665S	OPTIONAL	OPTIONAL	OPTIONAL	OPTIONAL	OPTIONAL	—
GDP665S	OPTIONAL	OPTIONAL	OPTIONAL	OPTIONAL	OPTIONAL	—
GDT565S	OPTIONAL	OPTIONAL	OPTIONAL	OPTIONAL	OPTIONAL	—
GDT645S	OPTIONAL	OPTIONAL	OPTIONAL	OPTIONAL	OPTIONAL	—
GDF645S	OPTIONAL	OPTIONAL	OPTIONAL	OPTIONAL	OPTIONAL	—
GDP645S	OPTIONAL	OPTIONAL	OPTIONAL	OPTIONAL	OPTIONAL	—
GDP615H	OPTIONAL	OPTIONAL	OPTIONAL	OPTIONAL	OPTIONAL	—
GDT635H	OPTIONAL	OPTIONAL	OPTIONAL	OPTIONAL	OPTIONAL	—
GDT605	OPTIONAL	OPTIONAL	OPTIONAL	OPTIONAL	OPTIONAL	—
GDT545P	OPTIONAL	OPTIONAL	OPTIONAL	OPTIONAL	OPTIONAL	—
GDT535P	OPTIONAL	OPTIONAL	OPTIONAL	OPTIONAL	OPTIONAL	—
PDF820S	OPTIONAL	OPTIONAL	OPTIONAL	OPTIONAL	OPTIONAL	—
GDF650S	OPTIONAL	OPTIONAL	OPTIONAL	OPTIONAL	OPTIONAL	—
GDF630P	OPTIONAL	OPTIONAL	OPTIONAL	OPTIONAL	OPTIONAL	—
GDF656S	OPTIONAL	OPTIONAL	OPTIONAL	OPTIONAL	OPTIONAL	—
GDF610P	OPTIONAL	OPTIONAL	OPTIONAL	OPTIONAL	OPTIONAL	—
GDF530P	OPTIONAL	OPTIONAL	OPTIONAL	OPTIONAL	OPTIONAL	—
GDF520P	OPTIONAL	OPTIONAL	OPTIONAL	OPTIONAL	OPTIONAL	—
GDF510P	OPTIONAL	OPTIONAL	OPTIONAL	OPTIONAL	OPTIONAL	—
GSD3300/K	OPTIONAL	OPTIONAL	OPTIONAL	—	OPTIONAL	OPTIONAL
GSD2100V	OPTIONAL	OPTIONAL	OPTIONAL	—	OPTIONAL	OPTIONAL
GSM2200V	OPTIONAL	OPTIONAL	OPTIONAL	—	OPTIONAL	OPTIONAL
GDT225S	OPTIONAL	OPTIONAL	OPTIONAL	OPTIONAL	OPTIONAL	—
PDT145S	OPTIONAL	OPTIONAL	OPTIONAL	OPTIONAL	OPTIONAL	—
GPT225S	OPTIONAL	OPTIONAL	OPTIONAL	OPTIONAL	OPTIONAL	—
GDT145S	OPTIONAL	OPTIONAL	OPTIONAL	OPTIONAL	OPTIONAL	—

UL is a registered trademark of Underwriters Laboratories, Inc.



MODEL	GPF3RACK DISHWASHER THIRD-RACK ACCESSORY KIT • Learn how to easily install the third-rack accessory kit in your plastic tub dishwasher • For select plastic tub dishwashers only • Upgrade your standard two-rack dishwasher with a third rack • Easily clean an entire flatware collection, knives and small utensils with an additional rack across the top of the dishwasher • GE Appliances Exclusive
GDT635HSM	OPTIONAL
GDT635HMM	OPTIONAL
GDT605PSM	OPTIONAL
GDT605PBM	OPTIONAL
GDT605PMM	OPTIONAL
GDT605PFM	OPTIONAL
GDT605PGM	OPTIONAL
GDP615HSM	OPTIONAL
GDP615HBM	OPTIONAL
GDP615HFM	OPTIONAL
GDF530PSM	OPTIONAL
GDF530PMM	OPTIONAL
GDF530PGM	OPTIONAL
PDT775SYN	OPTIONAL
PDT775SBN	OPTIONAL

COMPACTOR / DISPOSER PARTS & ACCESSORIES







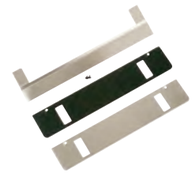

MODEL	WC12X10002 UNIVERSAL DISPOSER POWER CORD KIT • Fits most leading brands of disposers • 3′ length • UL listed	PM3X214 3-BOLT-MOUNT ADAPTER KIT • Adapter allows mounting an EZ-Mount disposer onto an existing 3-bolt-mount system • Includes splash guard	WC60X5017 HEAVY-DUTY COMPACTOR BAGS • 12 heavy-duty rectangular compactor bags • Made with 50% post-consumer recycled plastic	WC17X10019, WC17X10011, WC17X10016 (All 3 pieces required) TOE KICK DOOR ASM SS • Optional stainless toe kick conversion
GFC1020N	OPTIONAL	**INCLUDED**	—	—
GFC720N	OPTIONAL	**INCLUDED**	—	—
GFC530N	OPTIONAL	**INCLUDED**	—	—
GFC535N	**INCLUDED**	OPTIONAL	—	—
GREEN05P	**INCLUDED**	**INCLUDED**	—	—
GFC520N	OPTIONAL	**INCLUDED**	—	—
GFC525N	**INCLUDED**	OPTIONAL	—	—
GFC320N	OPTIONAL	**INCLUDED**	—	—
GFC325N	**INCLUDED**	OPTIONAL	—	—
GFB760N	OPTIONAL	**INCLUDED**	—	—
UCG1600L	—	—	—	—
UCG1680L	—	—	—	—

ORDER GE PARTS AND ACCESSORIES BY CALLING 800-851-6200 OR ONLINE AT WWW.GEAPPLIANCEPARTS.COM.



CLOTHES CARE

LAUNDRY MADE BETTER

Washers and dryers from GE Appliances are loaded with features that make laundry day easier. The UltraFresh Vent System with OdorBlock™, SmartDispense™ and Sensor Dry simplify every step, while new finishes like Sapphire Blue and Satin Nickel add a perfect touch of color to the laundry room.



GFW650SPNSN & GFD65ESPNSN—See pg. 168.



NEW Sapphire Blue finish—See pg. 168.



NEW Satin NIckel finish—See pg. 168.



GUD27GSPMDG/GUD27ESPMDG—See pg. 179.



GTW465ASNWW & GTD42EASJWW—See pg. 176.



GFT14ESSMWW & GFW148SSMWW—See pg. 171.



GFW650SSNWW & GFD65ESSNWW—See pg. 168.



FRONT LOAD CLOTHES CARE

FEATURE HIGHLIGHTS



ULTRAFRESH VENT SYSTEM WITH ODORBLOCK™

The first and only UltraFresh Vent System with OdorBlock™ eliminates excess moisture to help prevent odors, ensuring your washer stays fresh and clean.



MICROBAN® ANTIMICROBIAL TECHNOLOGY

Built into components including the gasket, dispenser and draining system, delivering protection that lives on load after load.



SMARTDISPENSE™ TECHNOLOGY

Save time and make laundry effortless with an intelligent dispenser that holds up to 32 loads of detergent and automatically dispenses the right amount each time.



1 STEP WASH + DRY

Wash and dry a small load, eliminating the need to transfer clothes to the dryer.



BUILT-IN WIFI POWERED BY SmartHQ™*

Start, stop and monitor your laundry from anywhere while receiving real-time notifications and updates.



DYNAMIC BALANCING TECHNOLOGY

Our patented, time-saving technology senses and re-balances uneven loads during the spin cycle, providing a quiet wash.



REVERSIBLE DOOR

Easily reverse your washer and dryer doors for superior installation flexibility.



WASHER LINK

Wirelessly links your washer to your dryer so you only choose a setting once.



POWERSTEAM

Refresh small loads and dewrinkle larger loads with the power of steam.

P GE Profile™ G GE Appliances

Not all features available on all models.
*Visit geappliances.com/connect to learn more about apps that support this appliance.

FRONT LOAD CLOTHES CARE





GFW850S

GE 5.0 CU. FT. CAPACITY SMART WASHER WITH STEAM

- UltraFresh Vent System with OdorBlock™
- SmartDispense™ Technology
- **1 Step Wash + Dry**
- Built-In WiFi powered by SmartHQ™
- Dynamic Balancing Technology (dBT™)
- Reversible door
- Sanitize + Allergen
- Quick Wash

Diamond Gray - GFW850SPNDG
Sapphire Blue - GFW850SPNRS
White - GFW850SSNWW

Matching Dryer: GFD85ES/GS
Shown with optional pedestal GFP1528PNRS. GFP1528PNDG Diamond Gray and GFP1528SNWW. White pedestals not shown.
7" Riser also available: GFR0728PNDG, GFR0728PNRS, GFR0728SNWW





GFD85ES/GS

GE 7.8 CU. FT. CAPACITY SMART DRYER WITH STEAM

- **Stainless steel drum**
- **Washer Link**
- Steam Refresh
- Built-In WiFi powered by SmartHQ
- Quick Dry
- Reduce Static
- Sanitize cycle
- Vent sensor

Diamond Gray - GFD85ESPNDG (Electric)
Diamond Gray - GFD85GSPNDG (Gas)
Sapphire Blue - GFD85ESPNRS (Electric)
Sapphire Blue - GFD85GSPNRS (Gas)
White - GFD85ESSNWW (Electric)
White - GFD85GSSNWW (Gas)

Matching Washer: GFW850S
Shown with optional pedestal GFP1528PNRS. GFP1528PNDG Diamond Gray and GFP1528SNWW. White pedestals not shown.
7" Riser also available: GFR0728PNDG, GFR0728PNRS, GFR0728SNWW





GFW550S

GE 4.8 CU. FT. CAPACITY SMART WASHER

- UltraFresh Vent System with OdorBlock
- Built-In WiFi powered by SmartHQ
- Time Saver
- Dynamic Balancing Technology (dBT)
- Reversible door
- True 32" closet depth
- Quick Wash
- Sanitize Cycle with Oxi

White - GFW550SSNWW
Diamond Gray - GFW550SPNDG

Matching Dryer: GFD55ES/GS, GFV55ES
Shown with optional pedestal GFP1528SNWW. GFP1528PNDG Diamond Gray pedestal not shown.
7" Riser also available: GFR0728SNWW, GFR0728PNDG





GFD55ES/GS

GE 7.8 CU. FT. CAPACITY SMART DRYER

- Built-In WiFi powered by SmartHQ
- Quick Dry
- Sanitize cycle
- Wrinkle Care
- Sensor Dry
- Damp Alert
- Vent sensor
- Simplified 4-way venting

White - GFD55ESSNWW (Electric)
White - GFD55GSSNWW (Gas)
Diamond Gray - GFD55ESPNDG (Electric)
Diamond Gray - GFD55GSPNDG (Gas)

GFV55—LONG-VENT MODEL

Similar to GFD55ESSN with up to 200-ft. venting capability.

White – GFV55ESSNWW (Electric)

Matching Washer: GFW510SCN, GFW550S
Shown with optional pedestal GFP1528SNWW. GFP1528PNDG Diamond Gray pedestal not shown.
7" Riser also available: GFR0728SNWW, GFR0728PNDG





GFW650S

GE 4.8 CU. FT. CAPACITY SMART WASHER WITH STEAM

- UltraFresh Vent System with OdorBlock
- **SmartDispense Technology**
- Built-In WiFi powered by SmartHQ
- Dynamic Balancing Technology (dBT)
- Reversible door
- **Sanitize + Allergen**
- Quick Wash
- True 32" closet depth

Satin Nickel – GFW650SPNSN
White – GFW650SSNWW

Matching Dryer: GFD65ES/GS
Shown with optional pedestal GFP1528PNSN. GFP1528SNWW White pedestal not shown.
7" Riser also available: GFR0728PNSN, GFR0728SNWW





GFD65ES/GS

GE 7.8 CU. FT. CAPACITY SMART DRYER WITH STEAM

- **Steam Refresh**
- Built-In WiFi powered by SmartHQ
- Quick Dry
- **Reduce Static**
- Sanitize cycle
- Wrinkle Care
- Damp Alert
- Vent sensor

Satin Nickel – GFD65ESPNSN (Electric)
Satin Nickel – GFD65GSPNSN (Gas)
White – GFD65ESSNWW (Electric)
White – GFD65GSSNWW (Gas)

Matching Washer: GFW650S.
Shown with optional pedestal GFP1528PNSN. GFP1528SNWW White pedestal not shown.
7" Riser also available: GFR0728PNSN, GFR0728SNWW





CONTRACT ONLY

GFW510S

GE 4.5 CU. FT. CAPACITY SMART WASHER

- UltraFresh Vent System with OdorBlock
- Built-In WiFi powered by SmartHQ
- Dynamic Balancing Technology (dBT)
- Reversible door
- True 32" closet depth
- Quick Wash
- 10-year warranty
- Sanitize Cycle with Oxi

White – GFW510SCNWW

Matching Dryer: GFD55ES/GS, GFV55ES
Shown with optional pedestal GFP1528SNWW.
7" Riser also available: GFR0728SNWW

Contract Only Models are included for the Builder Channel only.
See your Area Sales Manager for details.

Complete features and specifications on pages 356-358.
See page 277 for Accessibility Requirements.

Bold = feature upgrade from previous model.
For definitions of logos, see page 9.

FRONT LOAD COMBINATION WASHER & DRYER





GFQ14E

GE 24" 2.4 CU. FT. CAPACITY FRONT LOAD WASHER & CONDENSER DRYER COMBO

- 2.4 cu. ft. capacity
- No vent required, standard 120V plug
- All-In-One Wash & Dry
- Detergent, bleach and fabric softener dispensers
- Auto Wash + Dry
- Steam wash
- Sanitize cycles
- Add a Garment
- ADA compliant with the use of GAF140SSNWW riser
- WiFi optional*

White – GFQ14ESSNWW

FRONT LOAD WASHER & CONDENSER DRYER





GFW148S

GE 2.4 CU. FT. CAPACITY 24" SMART FRONT LOAD WASHER

- Plugs into dryer or wall
- Stainless steel basket
- Steam
- Electronic touch controls
- 14 wash cycles
- 1,400-RPM spin speed
- WiFi optional*
- ADA compliant with the use of GAF140SSNWW riser

White - GFW148SSMWW

Matching Dryers: GFT14ESSM, GFD14ESSN





GFT14ES

GE 4.1 CU. FT. CAPACITY 24" SMART VENTLESS CONDENSER DRYER

- Reversible door
- Stainless steel drum
- Outlet for washer
- Sanitize cycle
- Extended Tumble
- Can drain to water tank or standpipe
- WiFi optional*
- ADA compliant with the use of GAF140SSNWW riser

White - GFT14ESSMWW (Electric)

Matching Washer: GFW148SSM





GFD14ES

GE 4.3 CU. FT. CAPACITY 24" SMART VENTED ELECTRIC DRYER

- Reversible door
- Stainless steel drum
- Outlet for washer
- Sanitize cycle
- Extended tumble
- WiFi optional*
- ADA compliant with the use of GAF140SSNWW riser

White – GFD14ESSNWW (Electric)

Matching Washer: GFW148SSM



GAF140SSNWW

4" RISER AND DRIP PAN FOR 24" FRONT LOAD WASHER AND DRYERS

- 4" riser that meets ADA standard
- Easy installation
- Integrated drip pan
- Compatible with GFW148/GFT14/GFD14/GFQ14

Complete features and specifications on pages 359–361.
See page 277 for Accessibility Requirements.
Bold = feature upgrade from previous model.
For definitions of logos, see page 9.

*SmartHQ™ Connect Module is required and sold separately. It is available for order on geappliances.com, part number PBX23W00Y0.

TOP LOAD CLOTHES CARE

FEATURE HIGHLIGHTS

WASHERS



SMARTDISPENSE™ TECHNOLOGY

An intelligent dispenser that holds up to 48 loads of detergent and automatically dispenses the right amount, saving you time and making laundry effortless.



FLEXDISPENSE™

Automatically releases liquid or powder detergent, fabric softener, and even detergent packs like Tide PODS™, at the right time for faster activation and optimal cleaning performance.

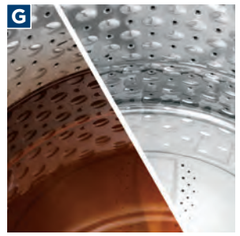

POWER PREWASH

Get even the most heavily soiled items perfectly clean in a single cycle that adds detergent, agitates, and soaks, then drains the dirty water and repeats the wash process.



WATER STATION

Pre-treat your clothes inside the washer with an integrated water station that dispenses water and detergent together, or just water, all at your desired temperature.



BUILT-IN WIFI BY SmartHQ™

Start the washer before your commute home, thanks to the GE Appliances app that lets you monitor and control your laundry pair from anywhere, as well as receive real-time notifications and updates.



DEEP FILL

Customize your water levels with just the touch of a button, and fill the tub with as much water as you want so you can wash your way.

DRYERS



STEAM

Dewrinkle and refresh your laundry right in the dryer with innovative built-in steam technology.



SENSOR DRY

Prevent over-drying and get more wear out of your clothing, thanks to innovative dual thermistor technology that continually monitors temperature and moisture in the dryer.



120-FT. VENTING CAPABILITY

Maximize your dryer's performance with innovative venting, designed to provide optimal airflow, enhanced drying ability and flexible installation.

P GE Profile™ G GE Appliances

Not all features available on all models.

TOP LOAD WASHERS & DRYERS





GTW840C

GE 5.2 CU. FT. CAPACITY SMART STAINLESS STEEL WASHER

- **SmartDispense™ Technology**
- **Power Prewash**
- **Water Station**
- **Built-In WiFi powered by SmartHQ™**
- Efficient infusor
- QuietWash
- Deep Fill
- Multiple rinse options
- Limited 10-year motor warranty

Diamond Gray – GTW840CPNDG
White with Silver backsplash – GTW840CSNWS

Matching Dryer: GTD84EC/GC





GTW845C

GE 5.0 CU. FT. CAPACITY SMART STAINLESS STEEL WASHER

- **SmartDispense Technology**
- **Power Prewash**
- **Water Station**
- **Built-In WiFi powered by SmartHQ**
- Dual-action agitator
- QuietWash
- Deep Fill
- Multiple rinse options
- Limited 10-year motor warranty

Diamond Gray – GTW845CPNDG
White with Silver backsplash – GTW845CSNWS

Matching Dryer: GTD84EC/GC





GTD84EC/GC

GE 7.4 CU. FT. CAPACITY SMART DRYER WITH STEAM

- **Steam**
- **Blocked Vent Sensor**
- **Built-In WiFi powered by SmartHQ**
- Sensor Dry
- Up to 120-ft. venting
- Wrinkle Care
- Digital touch control
- My Cycle settings
- Quick Dry

Diamond Gray – GTD84ECPNDG (Electric)
Diamond Gray – GTD84GCPNDG (Gas)
White with Silver backsplash – GTD84ECSNWS (Electric)
White with Silver backsplash – GTD84GCSNWS (Gas)

Matching Washers: GTW840CSN, GTW840CPN, GTW845CSN and GTW845CPN





GTD72EB/GB

GE 7.4 CU. FT. CAPACITY SMART DRYER

- Sensor Dry
- Up to 120-ft. venting
- Wrinkle Care
- My Cycle Settings
- Quick Dry
- Damp Alert
- Dry level options
- Sanitize cycle
- WiFi optional*

Diamond Gray - GTD72EBPNDG (Electric)
Diamond Gray - GTD72GBPNDG (Gas)
White with Silver backsplash – GTD72EBSNWS (Electric)
White with Silver backsplash – GTD72GBSNWS (Gas)

Matching Washers: GTW720BSN, GTW720BPN, GTW725BSN and GTW725BPN





GTW720B

GE 4.8 CU. FT. CAPACITY SMART STAINLESS STEEL WASHER

- **FlexDispense™**
- **QuietWash**
- Stain Removal Guide
- Sanitize with Oxi
- Efficient infusor
- Deep Fill
- Multiple rinse options
- Limited 10-year motor warranty
- WiFi optional*

Diamond Gray - GTW720BPNDG
White with Silver backsplash – GTW720BSNWS

Matching Dryer: GTD72EB/GB





GTW725B

GE 4.6 CU. FT. CAPACITY SMART STAINLESS STEEL WASHER

- **FlexDispense**
- **QuietWash**
- Stain Removal Guide
- Sanitize with Oxi
- Dual-action agitator
- Deep Fill
- Multiple rinse options
- Limited 10-year motor warranty
- WiFi optional*

Diamond Gray - GTW725BPNDG
White with Silver backsplash – GTW725BSNWS

Matching Dryer: GTD72EB/GB





GTW500A

GE 4.6 CU. FT. CAPACITY STAINLESS STEEL WASHER

- Stain Pretreat
- DeepClean cycle
- Deep Fill
- Speed Wash
- Deep Rinse
- 2nd Rinse
- Efficient infusor
- 5 soil levels

White with Silver backsplash – GTW500ASNWS

Matching Dryer: GTD45EA/GASJ





GTD45EA/GA

GE 7.2 CU. FT. CAPACITY DRYER

- **Sensor Dry**
- Up to 120-ft. venting capability
- Aluminized alloy drum
- Extended Tumble
- End-of-cycle signal

White with Silver backsplash – GTD45EASJWS (Electric)
White with Silver backsplash – GTD45GASJWS (Gas)

Matching Washers: GTW500ASN, GTW490ACJWS

*SmartHQ Connect Module is required and sold separately.
It is available for order on geappliances.com, part number PBX23W00Y0.
Complete features and specifications on pages 362-365.
Bold = feature upgrade from previous model.
For definitions of logos, see page 9.

TOP LOAD WASHERS & DRYERS





GTW465A

GE 4.5 CU. FT. CAPACITY STAINLESS STEEL WASHER

- Deep Fill
- Water level/Load size
- DeepClean cycle
- Speed Wash
- Deep Rinse
- 2nd Rinse
- Auto Soak
- Dual-action agitator

White – GTW465ASNWW

Matching Dryers: GTD42EA/GASJ and GTX42EA/GASJ





GTD42EA/GA

GE 7.2 CU. FT. CAPACITY DRYER

- Auto Dry
- Up to 120-ft. venting capability
- Aluminized alloy drum
- **Extended Tumble**
- End-of-cycle signal
- **4 heat selections**

White – GTD42EASJWW (Electric)
White – GTD42GASJWW (Gas)

GTX42EA/GASJWW

Similar to GTD42EA/GASJ except 6.2 cu. ft. capacity

Matching Washers: GTW465ASN and GTW490ACJWW





CONTRACT ONLY

GTW490A

GE 4.4 CU. FT. CAPACITY STAINLESS STEEL WASHER

- **ENERGY STAR® certified**
- **Efficient Infusor**
- **Deep Fill**
- **Stain Pretreat**
- Deep Rinse
- **Auto Soak**
- Speed Wash

White – GTW490ACJWW
White/Silver backsplash – GTW490ACJWS

Matching Dryers: GTD42EA/GASJ and GTX42EA/GASJ for GTW490ACJWW and GTD45EA/GASJ for GTW490ACJWS

Complete features and specifications on pages 362-365.
Bold = feature upgrade from previous model.
For definitions of logos, see page 9.

Contract Only Models are included for the Builder Channel only.
See your Area Sales Manager for details.





GTW335A

GE 4.2 CU. FT. CAPACITY STAINLESS STEEL WASHER

- Water level/Load size
- DeepClean cycle
- Large capacity
- Deep Rinse
- Heavy-duty agitator
- Stainless steel basket
- 11 wash cycles
- 6 water temperatures

White – GTW335ASNWW

Matching Dryers: GTD33EA/GASK, GTX33EA/GASK





GTD33EA/GA

GE 7.2 CU. FT. CAPACITY DRYER

- Auto Dry
- Up to 120-ft. venting capability
- Aluminized alloy drum
- 3 heat selections
- Rotary electromechanical controls
- Upfront lint filter
- Reverse-a-Door

White – GTD33EASKWW (Electric)
White – GTD33GASKWW (Gas)

GTX33EA/GASKWW

Similar to GTD33EA/GASK except 6.2 cu. ft. capacity

Matching Washer: GTW335ASN





CONTRACT ONLY

GTW220A

GE 3.8 CU. FT. CAPACITY STAINLESS STEEL WASHER

- Stainless steel basket
- Heavy-duty agitator
- **Precise Fill with 4 wash levels**
- Rotary electronic controls with cycle status lights
- 10 wash cycles
- Deep Rinse

White – GTW220ACKWW

Matching Dryer: GTX22EA/GASK





CONTRACT ONLY

GTX22EA/GA

GE 6.2 CU. FT. CAPACITY DRYER

- Auto Dry
- Up to 120-ft. venting capability
- Aluminized alloy drum
- 3 heat selections
- Rotary electromechanical controls
- Upfront lint filter
- Reverse-a-Door

White – GTX22EASKWW (Electric)
White – GTX22GASKWW (Gas)

Matching Washer: GTW220ACK

STACKABLE/PORTABLE WASHERS/DRYERS





GNW128P

GE SPACE-SAVING 2.8 CU. FT. CAPACITY PORTABLE WASHER

- Large capacity
- Small footprint
- Caster wheels included
- Included unicoupler
- Electronic one-touch controls with LED readout
- 8 washer cycles
- 4 wash temperatures
- Stainless steel basket

White – GNW128PSMWW





GNW128S

GE SPACE-SAVING 2.8 CU. FT. CAPACITY STATIONARY WASHER

- Large capacity
- Small footprint
- Electronic one-touch controls with LED readout
- 8 washer cycles
- 4 wash temperatures
- Stainless steel basket

White – GNW128SSMWW

inlet hoses included



DSKP333EC

GE 120V PORTABLE DRYER 3.6 CU. FT. CAPACITY

- 3 dry cycles
- 3 heat selections
- Dura Drum interior
- Quiet-by-Design

White – DSKP333ECWW

ADA COMPLIANT



DSKS433EB

GE 240V STATIONARY DRYER 3.6 CU. FT. CAPACITY

- Auto Dry
- **4 heat selections**
- 3 dry cycles
- Rotary controls
- Upfront lint filter

White – DSKS433EBWW



DSKS333EC

GE SPACEMAKER® 120V 3.6 CU. FT. STATIONARY ELECTRIC DRYER

- 3 dry cycles
- 3 heat selections
- Dura Drum interior
- Quiet-by-Design

White – DSKS333ECWW

Complete features and specifications on pages 366-367.
See page 277 for Accessibility Requirements.
Bold = feature upgrade from previous model.
For definitions of logos, see page 9.

UNITIZED WASHERS/DRYERS



GUD27ES/GS

GE 27" UNITIZED WASHER/DRYER WITH 3.8 CU. FT. CAPACITY WASHER AND 5.9 CU. FT. CAPACITY DRYER

- Stainless steel basket
- Rotary electromechanical controls (dryer)
- 11 wash cycles
- 6 wash temperatures
- 1 wash/spin speed combination
- Auto Load Sensing with 4 water levels
- Rotary electronic controls (washer)
- Bleach dispenser
- WiFi optional (washer)*

White – GUD27ESSMWW (Electric)
White – GUD27GSSMWW (Gas)
Diamond Gray – GUD27ESPMDG (Electric)
Diamond Gray – GUD27GSPMDG (Gas)

GUV27ES—LONG-VENT MODEL

UP TO 200-FT. VENTING CAPABILITY

White – GUV27ESSMWW (Electric)

inlet hoses included



GUD27EE/GE

GE 27" ENERGY STAR® UNITIZED WASHER/DRYER WITH 3.9 CU. FT. CAPACITY WASHER AND 5.9 CU. FT. CAPACITY DRYER

- Precise Fill technology
- Deep Rinse
- 11 wash cycles
- 6 wash temperatures
- Efficient infusor
- Cycle status lights
- End-of-cycle chime
- WiFi optional*

White – GUD27EESNWW (Electric)
White – GUD27GESNWW (Gas)

inlet hoses included

Smart



GUD24ES/GS

GE 24" UNITIZED WASHER/DRYER WITH 2.3 CU. FT. CAPACITY WASHER AND 4.4 CU. FT. CAPACITY DRYER

- Stainless steel basket
- Rotary electromechanical controls (dryer)
- 11 wash cycles
- 6 wash temperatures
- 1 wash/spin speed combination
- Auto Load Sensing
- Rotary electronic controls (washer)
- Bleach dispenser
- WiFi optional (washer)*

White – GUD24ESSMWW (Electric)
White – GUD24GSSMWW (Gas)

inlet hoses included

*SmartHQ™ Connect Module is required and sold separately.
It is available for order on geappliances.com, part number PBX23W00Y0.

CLOTHES CARE PARTS & ACCESSORIES









MODEL	WX14X10011 UNIVERSAL 6' STAINLESS STEEL WASHER HOSE WITH 90° ELBOW, 2-PACK • Heavy-duty stainless steel with protective, non-corrosive coating • Burst-resistant, triple-ply design for extra durability • 90° elbow for installation in tight spaces	WX14X10005 UNIVERSAL 4' POLYMER-COATED WASHER HOSE, 2-PACK • Certified 1,600 PSI burst strength for greater durability • Dual crimping inside and outside reduces chance of leaking • Durable braided stainless steel exterior resists puncturing and tearing • GE Appliances recommends new hoses for approved installation	WH41X10207 UNIVERSAL 4' RUBBER WASHER HOSE, 2-PACK • Not repackaged or reconditioned • 800 PSI strength for greater durability • Woven polyester reinforcement adds strength, reduces stretching and deterioration • GE Appliances recommends new hoses for approved installation • GE Appliances recommends replacing hoses every 5 years	WH49X301 WASHING MACHINE DRAIN HOSE EXTENSION KIT
GFW850S	AVAILABLE FOR INSTALLATION	AVAILABLE FOR INSTALLATION	AVAILABLE FOR INSTALLATION	–
GFD85	AVAILABLE FOR INSTALLATION	AVAILABLE FOR INSTALLATION	AVAILABLE FOR INSTALLATION	–
GFW650S	AVAILABLE FOR INSTALLATION	AVAILABLE FOR INSTALLATION	AVAILABLE FOR INSTALLATION	–
GFD65	AVAILABLE FOR INSTALLATION	AVAILABLE FOR INSTALLATION	AVAILABLE FOR INSTALLATION	–
GFW550S	AVAILABLE FOR INSTALLATION	AVAILABLE FOR INSTALLATION	AVAILABLE FOR INSTALLATION	–
GFD55/GFV55	–	–	–	–
GFW510S	INCLUDED	AVAILABLE FOR INSTALLATION	AVAILABLE FOR INSTALLATION	–
GFW148S	AVAILABLE FOR INSTALLATION	AVAILABLE FOR INSTALLATION	AVAILABLE FOR INSTALLATION	–
GFT14	–	–	–	OPTIONAL ACCESSORY
GFD14	–	–	–	OPTIONAL ACCESSORY
GFQ14	AVAILABLE FOR INSTALLATION	AVAILABLE FOR INSTALLATION	AVAILABLE FOR INSTALLATION	OPTIONAL ACCESSORY
GTW840	AVAILABLE FOR INSTALLATION	AVAILABLE FOR INSTALLATION	AVAILABLE FOR INSTALLATION	OPTIONAL ACCESSORY
GTW845	AVAILABLE FOR INSTALLATION	AVAILABLE FOR INSTALLATION	AVAILABLE FOR INSTALLATION	OPTIONAL ACCESSORY
GTD84	–	–	–	–
GTW720	AVAILABLE FOR INSTALLATION	AVAILABLE FOR INSTALLATION	AVAILABLE FOR INSTALLATION	OPTIONAL ACCESSORY
GTW725	AVAILABLE FOR INSTALLATION	AVAILABLE FOR INSTALLATION	AVAILABLE FOR INSTALLATION	OPTIONAL ACCESSORY
GTD72	–	–	–	–
GTW500A	AVAILABLE FOR INSTALLATION	AVAILABLE FOR INSTALLATION	AVAILABLE FOR INSTALLATION	OPTIONAL ACCESSORY
GTD45	–	–	–	–
GTW465	AVAILABLE FOR INSTALLATION	AVAILABLE FOR INSTALLATION	AVAILABLE FOR INSTALLATION	OPTIONAL ACCESSORY
GTD42	–	–	–	–
GTW490A	AVAILABLE FOR INSTALLATION	AVAILABLE FOR INSTALLATION	INCLUDED	OPTIONAL ACCESSORY
GTW335A	AVAILABLE FOR INSTALLATION	AVAILABLE FOR INSTALLATION	AVAILABLE FOR INSTALLATION	OPTIONAL ACCESSORY
GTD33/GTX33	–	–	–	–
GTW220A	AVAILABLE FOR INSTALLATION	AVAILABLE FOR INSTALLATION	INCLUDED	OPTIONAL ACCESSORY
GTX22	–	–	–	–
GNW128P	AVAILABLE FOR INSTALLATION	AVAILABLE FOR INSTALLATION	AVAILABLE FOR INSTALLATION	–
GNW128S	AVAILABLE FOR INSTALLATION	AVAILABLE FOR INSTALLATION	AVAILABLE FOR INSTALLATION	–
DSKP333	–	–	–	–
DSKS433	–	–	–	–
DSKS333	–	–	–	–
GUD27	AVAILABLE FOR INSTALLATION	AVAILABLE FOR INSTALLATION	AVAILABLE FOR INSTALLATION	–
GUD24	AVAILABLE FOR INSTALLATION	AVAILABLE FOR INSTALLATION	AVAILABLE FOR INSTALLATION	–
GFQ14E				







MODEL	WH49X316 WASHING MACHINE DRAIN HOSE EXTENSION KIT	WH49X317 WASHING MACHINE DRAIN HOSE EXTENSION KIT	WX17X10001CA UNIVERSAL ANTI-VIBRATION PADS • Helps reduce noise and vibration from washer and/or dryer • Protects floors
GFW850S	OPTIONAL ACCESSORY	–	OPTIONAL ACCESSORY
GFD85	–	–	–
GFW650S	OPTIONAL ACCESSORY	–	OPTIONAL ACCESSORY
GFD65	–	–	–
GFW550S	OPTIONAL ACCESSORY	–	OPTIONAL ACCESSORY
GFD55/GFV55	–	–	
GFW510S	OPTIONAL ACCESSORY	–	OPTIONAL ACCESSORY
GFW148S	–	OPTIONAL ACCESSORY	–
GFT14	–	–	–
GFD14	–	–	–
GFQ14	–	–	–
GTW840C	–	–	OPTIONAL ACCESSORY
GTW845S	–	–	OPTIONAL ACCESSORY
GTD84	–	–	–
GTW720B	–	–	OPTIONAL ACCESSORY
GTW725B	–	–	OPTIONAL ACCESSORY
GTD72	–	–	–
GTW500A	–	–	OPTIONAL ACCESSORY
GTD45	–	–	–
GTW465	–	–	OPTIONAL ACCESSORY
GTD42	–	–	–
GTW490A	–	–	OPTIONAL ACCESSORY
GTW335A	–	–	OPTIONAL ACCESSORY
GTD33/GTX33	–	–	–
GTW220A	–	–	OPTIONAL ACCESSORY
GTX22	–	–	–
GNW128P	–	OPTIONAL ACCESSORY	–
GNW128S	–	OPTIONAL ACCESSORY	–
DSKP333	–	–	–
DSKS433	–	–	–
DSKS333	–	–	–
GUD27	–	–	–
GUD24	–	–	–
QFW150	–	OPTIONAL ACCESSORY	–
GFQ148	–	OPTIONAL ACCESSORY	–
GFQ14E			

ORDER GE PARTS AND ACCESSORIES BY CALLING 800-851-6200 OR ONLINE AT WWW.GEAPPLIANCEPARTS.COM.

CLOTHES CARE PARTS & ACCESSORIES







MODEL	**PM7X2** (WHITE) UNIVERSAL LOW-PROFILE WASHER FLOOR TRAY • Protects floor from scuffs, spills, and overflows • Low-profile washer tray allows pedestal drawer to fully extend without having to lift the washing machine • Ideal for 2nd floor laundry rooms • PVC connector included and easily attaches to floor drain for added protection • Interior dimensions: 29"W x 33"L Exterior dimensions: 31" x 35" • Maximum capacity: 6.78 gallons/27.5 liters	**WX09X10020** UNIVERSAL 4-WIRE, 6', 30-AMP ELECTRICAL DRYER CORD • 99.9% pure copper for optimal performance • Reinforced stamped brass plug blades reduce breakage and bending • Ring terminals provide dependable, secure installation • Space-saving, right-angle plug design gets dryer closer to the wall **WX09X10018**—4-wire, 4', 30-amp **WX09X10019**—4-wire, 5', 30-amp **WX09X10002**—3-wire, 4', 30-amp **WX09X10003**—3-wire, 5', 30-amp **WX09X10004**—3-wire, 6', 30-amp	**PM08X10085** GE APPLIANCES EXCLUSIVE UNIVERSAL FLEXIBLE METAL TRANSITION DRYER DUCT • Allows 90° turns without elbows or cutting • Crush-resistant for enhanced airflow • 8' length fits most installations • UL® listed*
GFW850S	OPTIONAL ACCESSORY	–	–
GFD85	OPTIONAL ACCESSORY	OPTIONAL ACCESSORY	OPTIONAL ACCESSORY
GFW650S	OPTIONAL ACCESSORY	–	–
GFD65	OPTIONAL ACCESSORY	OPTIONAL ACCESSORY	OPTIONAL ACCESSORY
GFW450S	OPTIONAL ACCESSORY	–	–
GFW550S	OPTIONAL ACCESSORY	–	–
GFD55/GFV55	OPTIONAL ACCESSORY	OPTIONAL ACCESSORY	OPTIONAL ACCESSORY
GFW510S	OPTIONAL ACCESSORY	–	–
GFW148S	–	–	–
GFT14	–	OPTIONAL ACCESSORY	–
GFD14	–	OPTIONAL ACCESSORY	OPTIONAL ACCESSORY
GFQ14	–	–	–
GTW840C	OPTIONAL ACCESSORY	–	–
GTW845S	OPTIONAL ACCESSORY	–	–
GTD84	–	OPTIONAL ACCESSORY	OPTIONAL ACCESSORY
GTW720B	OPTIONAL ACCESSORY	–	–
GTW725B	OPTIONAL ACCESSORY	–	–
GTD72	–	OPTIONAL ACCESSORY	OPTIONAL ACCESSORY
GTW500A	OPTIONAL ACCESSORY	–	–
GTD45	–	OPTIONAL ACCESSORY	OPTIONAL ACCESSORY
GTW465	OPTIONAL ACCESSORY		–
GTD42	–	OPTIONAL ACCESSORY	OPTIONAL ACCESSORY
GTW490A	OPTIONAL ACCESSORY	–	–
GTW335A	OPTIONAL ACCESSORY	–	–
GTD33 /GTX33	–	OPTIONAL ACCESSORY	OPTIONAL ACCESSORY
GTW220A	OPTIONAL ACCESSORY	–	–
GTX22	–	OPTIONAL ACCESSORY	OPTIONAL ACCESSORY
GNW128P	–	–	–
GNW128S	–	–	–
DSKP333	–	–	OPTIONAL ACCESSORY
DSKS433	–	–	OPTIONAL ACCESSORY
DSKS333	–	–	OPTIONAL ACCESSORY
GUD27	–	OPTIONAL ACCESSORY	OPTIONAL ACCESSORY
GUD24	–	OPTIONAL ACCESSORY	OPTIONAL ACCESSORY
GFQ14E			

*UL is a registered trademark of Underwriters Laboratories, Inc.

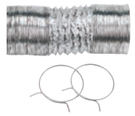







MODEL	**PM8X73** UNIVERSAL FLEXIBLE DRYER DUCT • Flexible design allows for ease of installation • Made from heavy-duty, 4-ply aluminum foil laminate • 8' x 4" diameter (fully extended) • UL listed*	**PM15X114 - 4'** **PM15X118 - 5'** GAS DRYER CONNECTION KIT WITH AUTO SHUTOFF • Includes step-by-step instructions and everything needed for safe and easy installation of a gas dryer • Helps prevent a hazardous buildup of gas • For indoor or outdoor use	**WE25X0217** GE GAS DRYER LP CONVERSION KIT ACCESSORY • TL 27" Dryer • HALC 27" Dryer	**WE25M87** DRYER NATURAL GAS TO PROPANE
GFW850S	–	–	–	–
GFD85	OPTIONAL ACCESSORY	OPTIONAL FOR INSTALLATION (GAS MODEL ONLY)	–	OPTIONAL FOR INSTALLATION (GAS MODEL ONLY)
GFW650S	–	–	–	–
GFD65	OPTIONAL ACCESSORY	OPTIONAL FOR INSTALLATION (GAS MODEL ONLY)	–	OPTIONAL FOR INSTALLATION (GAS MODEL ONLY)
GFW550S	–	–	–	–
GFD55/GFV55	OPTIONAL ACCESSORY	OPTIONAL FOR INSTALLATION (GAS MODEL ONLY)	–	OPTIONAL FOR INSTALLATION (GAS MODEL ONLY)
GFW510S	–	–	–	–
GFW148S	–	–	–	–
GFT14	–	–	–	–
GFD14	OPTIONAL ACCESSORY	–	–	–
GFQ14	–	–	–	–
GTW840C	–	–	–	–
GTW845S	–	–	–	–
GTD84	OPTIONAL ACCESSORY	OPTIONAL ACCESSORY	OPTIONAL ACCESSORY	–
GTW720B	–	–	–	–
GTW725B	–	–	–	–
GTD72	OPTIONAL ACCESSORY	OPTIONAL ACCESSORY	OPTIONAL ACCESSORY	–
GTW500A	–	–	–	–
GTD45	OPTIONAL ACCESSORY	OPTIONAL ACCESSORY	OPTIONAL ACCESSORY	–
GTW465	–	–	–	–
GTD42	OPTIONAL ACCESSORY	OPTIONAL ACCESSORY	OPTIONAL ACCESSORY	–
GTW490A	–	–	–	–
GTW335A	–	–	–	–
GTD33 /GTX33	OPTIONAL ACCESSORY	OPTIONAL ACCESSORY	OPTIONAL ACCESSORY	–
GTW220A	–	–	–	–
GTX22	OPTIONAL ACCESSORY	OPTIONAL ACCESSORY	OPTIONAL ACCESSORY	–
GNW128P	–	–	–	–
GNW128S	–	–	–	–
DSKP333	OPTIONAL ACCESSORY	–	–	–
DSKS433	OPTIONAL ACCESSORY	–	–	–
DSKS333	OPTIONAL ACCESSORY	–	–	–
GUD27	OPTIONAL ACCESSORY	–	–	–
GUD24	OPTIONAL ACCESSORY	–	–	–
GFQ14E				

ORDER GE PARTS AND ACCESSORIES BY CALLING 800-851-6200 OR ONLINE AT WWW.GEAPPLIANCEPARTS.COM.

CLOTHES CARE PARTS & ACCESSORIES









MODEL	WE25M73 DRYER LP CONVERSION KIT - 24"	WE25M74 DRYER LP CONVERSION KIT - 27"	WE01X22274 OPTIONAL DRYER RACK	WE16X29317 DRYER SIDE VENT	DSDR24F GE STACK RACK
					• For use with up to 24"-wide portable or stationary washers and DSKS model dryers
GFW850S	–	–			–
GFD85	–	–	WE02X29449	OPTIONAL ACCESSORY	–
GFW650S	–	–	–	–	–
GFD65	–	–	WE02X29449	OPTIONAL ACCESSORY	–
GFW550S	–	–	–	–	–
GFD55/GFV55	–	–	WE02X29449	OPTIONAL ACCESSORY	–
GFW510S	–	–	–	–	–
GFW148S	–	–	–	–	–
GFT14	–	–	–	–	–
GFD14	–	–	–	–	–
GFQ14	–	–	–	–	–
GTW840C	–	–	–	–	–
GTW845S	–	–	–	–	–
GTD84	–	OPTIONAL FOR INSTALLATION	–	–	–
GTW720B	–		–	–	–
GTW725B	–		–	–	–
GTD72	–	OPTIONAL FOR INSTALLATION	–	–	–
GTW500A	–		–	–	–
GTD45	–	OPTIONAL FOR INSTALLATION	–	–	–
GTW465	–		–	–	–
GTD42	–	OPTIONAL FOR INSTALLATION	–	–	–
GTW490A	–		–	–	–
GTW335A	–		–	–	–
GTD33 / GTX33	–	OPTIONAL FOR INSTALLATION	–	–	–
GTW220A	–		–	–	–
GTX22	–	OPTIONAL FOR INSTALLATION	–	–	–
GNW128P	–	–	–	–	OPTIONAL FOR INSTALLATION
GNW128S	–	–	–	–	OPTIONAL FOR INSTALLATION
DSKP333	–	–	–	–	
DSKS433	–	–	–	–	OPTIONAL FOR INSTALLATION
DSKS333	–	–	–	–	OPTIONAL FOR INSTALLATION
GUD27	–	OPTIONAL FOR INSTALLATION	–	–	–
GUD24	OPTIONAL FOR INSTALLATION	–	–	–	–
GFQ14E					







MODEL	GFA28KITN GE WASHER/DRYER STACK BRACKET KIT	GFR0728 7" RIGHTHEIGHT RISER	WMK35 WALL-MOUNT KIT	GFA24KITL GE WASHER/DRYER 24" STACK BRACKET KIT
		• GFR0728SNWW • GFR0728PNDG • GFR0728PNSN • GFR0728PNRS	• Only applies to stationary models	• For use with 24" front load washers and dryers
GFW850S	OPTIONAL ACCESSORY	OPTIONAL ACCESSORY	–	–
GFD85	OPTIONAL ACCESSORY	OPTIONAL ACCESSORY	–	–
GFW650S	OPTIONAL ACCESSORY	OPTIONAL ACCESSORY	–	–
GFD65	OPTIONAL ACCESSORY	OPTIONAL ACCESSORY	–	–
GFW550S	OPTIONAL ACCESSORY	OPTIONAL ACCESSORY	–	–
GFD55/GFV55	OPTIONAL ACCESSORY	OPTIONAL ACCESSORY	–	–
GFW510S	OPTIONAL ACCESSORY	OPTIONAL ACCESSORY	–	–
GFW148S	–	–	–	OPTIONAL ACCESSORY
GFT14	–	–	–	OPTIONAL ACCESSORY
GFD14	–	–	–	OPTIONAL ACCESSORY
GFQ14	–	–	–	OPTIONAL ACCESSORY
GTW840C	–	–	–	–
GTW845S	–	–	–	–
GTD84	–	–	–	–
GTW720B	–	–	–	–
GTW725B	–	–	–	–
GTD72	–	–	–	–
GTW500A	–	–	–	–
GTD45	–	–	–	–
GTW465	–	–	–	–
GTD42	–	–	–	–
GTW490A	–	–	–	–
GTW335A	–	–	–	–
GTD33/GTX33	–	–	–	–
GTW220A	–	–	–	–
GTX22	–	–	–	–
GNW128P	–	–	–	–
GNW128S	–	–	–	–
DSKP333	–	–	–	–
DSKS433	–	–	–	–
DSKS333	–	–	–	–
GUD27	–	–	–	–
GUD24	–	–	–	–
GFQ14E				

ORDER GE PARTS AND ACCESSORIES BY CALLING 800-851-6200 OR ONLINE AT WWW.GEAPPLIANCEPARTS.COM.

PICK THE PERFECT PACKAGE

When you're helping create a dream kitchen, appliance options are a must. That's why we've created a host of striking packages, with options and combinations you can tailor to the tastes and needs of your customers. Choose among silver, gold and platinum package tiers across GE Profile™ and GE Appliances brands. Then hand-pick the right appliances to create the right package for your customer.



GE APPLIANCES

FREE-STANDING
PACKAGE OPTIONS

GE APPLIANCES

SILVER PACKAGE OPTIONS

For the hard-working kitchen

FREE-STANDING





25.1 CU. FT. SIDE-BY-SIDE REFRIGERATOR

- Fingerprint Resistant Stainless - GSS25IYNFS
- Slate - GSS25IMNES
- Black Slate - GSS25IENDS
- White - GSS25IGNWW
- Black - GSS25IGNBB



27 CU. FT. FRENCH-DOOR REFRIGERATOR

- Fingerprint Resistant Stainless - GNE27JYMFS
- Slate - GNE27JMMES
- White - GNE27JGMWW
- Black - GNE27JGMBB



30" FREE-STANDING ELECTRIC RANGE

- Stainless - JB645RKSS
- Slate - JB645EKES
- Black Slate - JB645FKDS
- White - JB645DKWW
- Black - JB645DKBB



30" FREE-STANDING ELECTRIC CONVECTION RANGE

- Stainless - JB735SPSS
- Slate - JB735EPES
- Black Slate - JB735FPDS
- White - JB735DPWW
- Black - JB735DPBB



30" FREE-STANDING GAS RANGE

- Stainless - JGBS66REKSS
- Slate - JGBS66EEKES
- Black Slate - JGBS66FEKDS
- White - JGBS66DEKWW
- Black - JGBS66DEKBB



30" FREE-STANDING GAS CONVECTION RANGE

- Stainless - JGB735SPSS
- Slate - JGB735EPES
- Black Slate - JGB735FPDS
- White - JGB735DPWW
- Black -JGB735DPBB



1.6 CU. FT. OVER-THE-RANGE MICROWAVE OVEN

- Stainless - JVM3160RFSS
- Slate - JVM3160EFES
- White - JVM3160DFWW
- Black - JVM3160DFBB
- Bisque - JVM3160DFCC



TOP CONTROL WITH PLASTIC INTERIOR DISHWASHER with Sanitize Cycle & Dry Boost

- Stainless - GDT530PSPSS
- Slate - GDT530PMPES
- White - GDT530PGPWW
- Black - GDT530PGPBB

*Available in front control



TOP CONTROL WITH PLASTIC INTERIOR DISHWASHER with Sanitize Cycle & Dry Boost

- Stainless - GDT605PSMSS
- Slate - GDT605PMMES
- Black Slate - GDT605PFMDS
- White - GDT605PGMWW
- Black - GDT605PGMBB

GE APPLIANCES

GOLD PACKAGE OPTIONS

For the family kitchen

FREE-STANDING

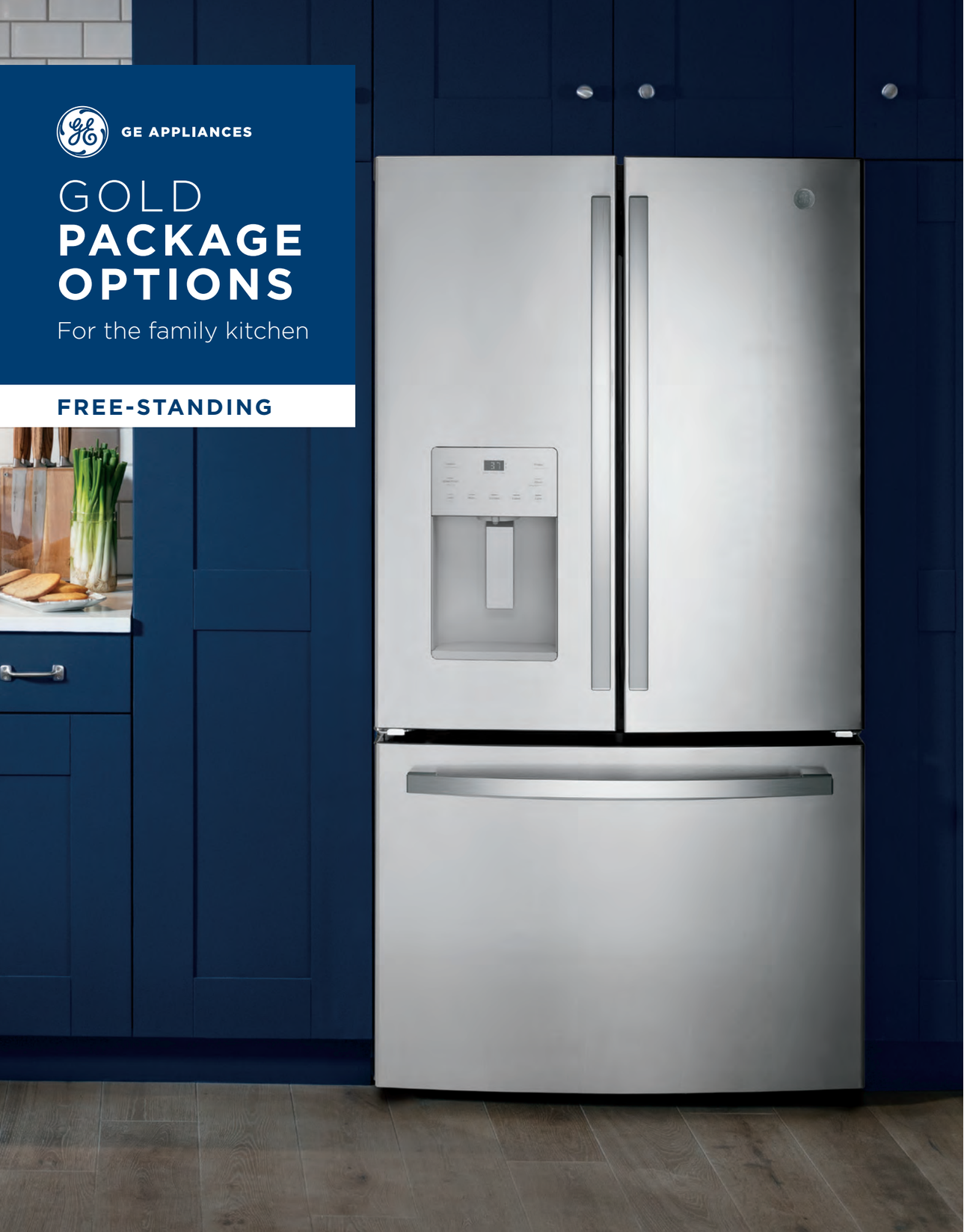



25.6 CU. FT. FRENCH-DOOR REFRIGERATOR

- Fingerprint Resistant Stainless - GFE26JYMFS
- Slate - GFE26JMMES
- Black Slate - GFE26JEMDS
- White - GFE26JGMWW
- Black - GFE26JGMBB



30" FREE-STANDING ELECTRIC DOUBLE OVEN CONVECTION RANGE

- Stainless - JBS86SPSS



30" SLIDE-IN ELECTRIC RANGE

- Stainless - JS645SLSS
- Black Slate - JS645FLDS
- White - JS645DLWW
- Slate - JS645ELES



30" SLIDE-IN FRONT-CONTROL GAS RANGE

- Stainless - JGSS66SELSS
- Slate - JGSS66EELES
- Black Slate - JGSS66FELDS



30" FREE-STANDING GAS DOUBLE OVEN CONVECTION RANGE

- Stainless - JGBS86SPSS



1.7 CU. FT. OVER-THE-RANGE SENSOR MICROWAVE OVEN

- Fingerprint Resistant Stainless - JVM6175YKFS
- Stainless - JVM6175SKSS
- Black Stainless – JVM6175BLTS
- Slate - JVM6175EKES
- White - JVM6175DKWW
- Black - JVM6175DKBB



FRONT CONTROL WITH PLASTIC INTERIOR DISHWASHER

with Sanitize Cycle & Dry Boost

- Stainless - GDF630PSMSS
- Slate - GDF630PMMES
- White - GDF630PGMWW
- Black - GDF630PGMBB

*Available in top control



TOP CONTROL WITH STAINLESS STEEL INTERIOR DISHWASHER

with Sanitize Cycle & Dry Boost with Fan Assist

- Fingerprint Resistant Stainless - GDP645SYNFS
- Fingerprint Resistant Stainless - GDT645SYNFS
- Stainless - GDT645SSNSS
- Slate - GDT645SMNES
- Black Slate - GDT645SFNDS
- White - GDT645SGNWW
- Black - GDT645SGNBB

*Available in front control



GE APPLIANCES

PLATINUM PACKAGE OPTIONS

For the high-performing kitchen

FREE-STANDING



27.7 CU. FT. FRENCH-DOOR REFRIGERATOR

- Fingerprint Resistant Stainless - GFE28GYNFS
- Slate - GFE28GMKES
- Black Slate - GFE28GELDS



27.7 CU. FT. FRENCH-DOOR REFRIGERATOR with Door In Door

- Fingerprint Resistant Stainless - GFD28GYNFS
- Slate - GFD28GMLES
- Black Slate - GFD28GELDS



30" SLIDE-IN ELECTRIC CONVECTION RANGE

- Stainless - JS760SPSS
- Slate - JS760EPES
- Black Slate - JS760FPDS
- White - JS760DPWW
- Black - JS760DPBB



30" SLIDE-IN FRONT-CONTROL CONVECTION GAS RANGE

- Stainless - JGS760SPSS
- Slate - JGS760EPES
- Black Slate - JGS760FPDS
- White - JGS760DPWW
- Black - JGS760DPBB



30" SLIDE-IN ELECTRIC CONVECTION DOUBLE OVEN RANGE

- Stainless - JSS86SPSS



30" SLIDE-IN CONVECTION DOUBLE OVEN GAS RANGE

- Stainless - JGSS86SPSS



1.9 CU. FT. OVER-THE-RANGE SENSOR MICROWAVE OVEN

- Stainless - JVM7195SKSS
- Black Stainless – JVM7195BLTS
- Slate - JVM7195EKES
- Black Slate - JVM7195FLDS
- White - JVM7195DKWW
- Black - JVM7195DKBB



TOP CONTROL WITH STAINLESS STEEL INTERIOR DISHWASHER with Sanitize Cycle & Dry Boost with Fan Assist

- Fingerprint Resistant Stainless - GDP665SYNFS
- Stainless - GDT665SSNSS
- Slate - GDT665SMNES
- Black Slate - GDT665SFNDS
- White - GDT665SGNWW
- Black - GDT665SGNBB



Profile™

Free-standing

PACKAGE OPTIONS

POWERED BY SmartHQ™ Smart Appliance options available in package



Silver Package Options

For the modern kitchen

FREE-STANDING



27.7 CU. FT. FRENCH-DOOR REFRIGERATOR
with Hands-Free AutoFill

- Fingerprint Resistant Stainless - PFE28KYNFS
- Slate - PFE28KMKES
- Black Slate - PFE28KBLTS



30" FREE-STANDING ELECTRIC DOUBLE OVEN CONVECTION RANGE

- Fingerprint Resistant Stainless - PB965YPFS
- Black Stainless – PB965BPTS



30" FREE-STANDING GAS DOUBLE OVEN CONVECTION RANGE

- Fingerprint Resistant Stainless - PGB965YPFS
- Black Stainless – PGB965BPTS



30" SMART FREE-STANDING ELECTRIC CONVECTION RANGE

- Fingerprint Resistant Stainless - PB935YPFS
- Black Stainless – PB935BPTS



30" FREE-STANDING GAS CONVECTION RANGE

- Fingerprint Resistant Stainless - PGB965YPFS
- Black Stainless – PGB965BPTS



2.1 CU. FT. OVER-THE-RANGE SENSOR MICROWAVE OVEN

- Stainless - PVM9005SJSS
- Black Stainless – PVM9005BLTS
- Slate - PVM9005EJES
- Black Slate - PVM9005FMDS



2.1 CU. FT. OVER-THE-RANGE SENSOR MICROWAVE OVEN

- Stainless - PVM9215SKSS



TOP CONTROL WITH STAINLESS STEEL INTERIOR DISHWASHER
with Sanitize Cycle & Dry Boost with Fan Assist

- Stainless - PDT715SYNFS
- Black Stainless – PDT715SBNTS
- Slate - PDT715SMNES
- Black Slate - PDT715SFNDS

POWERED BY SmartHQ



Profile™

Gold Package Options

For the technology enthusiast

FREE-STANDING



27.7 CU. FT. FRENCH-DOOR REFRIGERATOR
with Door in Door and Hands-Free AutoFill

- Fingerprint Resistant Stainless - PFD28KYNFS
- Black Stainless – PFD28KBLTS



30" SMART SLIDE-IN ELECTRIC CONVECTION RANGE

- Fingerprint Resistant Stainless - PSS93YPFS
- Black Stainless – PSS93BPTS



30" SMART SLIDE-IN FRONT-CONTROL GAS RANGE

- Fingerprint Resistant Stainless - PGS930YPFS
- Black Stainless – PGS930BPTS



1.7 CU. FT. CONVECTION OVER-THE-RANGE MICROWAVE

- Stainless - PVM9179SKSS
- Black Stainless – PVM9179BLTS
- Slate - PVM9179EKES
- Black Slate - PVM9179FLDS
- White - PVM9179DKWW
- Black - PVM9179DKBB



SMART TOP CONTROL STAINLESS STEEL INTERIOR DISHWASHER
with Sanitize Cycle & Twin Turbo Dry Boost

- Fingerprint Resistant Stainless - PDT775SYNFS
- Black Stainless – PDT775SBNTS

POWERED BY SmartHQ™



Profile™

Platinum Package Options

For the ultimate smart home

FREE-STANDING



27.9 CU. FT. SMART 4-DOOR FRENCH-DOOR REFRIGERATOR WITH DOOR IN DOOR

Fingerprint Resistant Stainless - PVD28BYNFS



27.7 CU. FT. SMART FRENCH-DOOR REFRIGERATOR WITH KEURIG® K-CUP® BREWING SYSTEM

Fingerprint Resistant Stainless - PFE28PYNFS



30″ SMART SLIDE-IN FRONT-CONTROL INDUCTION AND CONVECTION RANGE

Fingerprint Resistant Stainless - PHS930YPFS

Black Stainless – PHS930BPTS



30″ SMART SLIDE-IN FRONT-CONTROL DUAL-FUEL RANGE

Fingerprint Resistant Stainless - P2S930YPFS



30″ SMART SLIDE-IN FRONT-CONTROL ELECTRIC DOUBLE OVEN CONVECTION RANGE

Fingerprint Resistant Stainless - PS960YPFS



30″ SMART SLIDE-IN FRONT-CONTROL GAS DOUBLE OVEN CONVECTION RANGE

Fingerprint Resistant Stainless - PGS960YPFS



OVER-THE-RANGE OVEN with Advantium® Technology

Stainless - PSA9240SPSS

Stainless - PSA9120SPSS



SMART TOP CONTROL STAINLESS STEEL INTERIOR DISHWASHER with Sanitize Cycle & Twin Turbo Dry Boost

Fingerprint Resistant Stainless - PDT785SYNFS

Black Stainless – PDT785SBNTS

POWERED BY SmartHQ™



GE APPLIANCES

BUILT-IN
PACKAGE OPTIONS

POWERED BY SmartHQ™ Smart Appliance options available in package



GE APPLIANCES

SILVER PACKAGE OPTIONS

For the hard-working kitchen

BUILT-IN



21.8 CU. FT. COUNTER-DEPTH SIDE-BY-SIDE REFRIGERATOR

- Fingerprint Resistant Stainless - GZS22IYNFS
- Slate - GZS22IMNES
- Black Slate - GZS22IENDS



30" SMART BUILT-IN SINGLE WALL OVEN

- Stainless - JTS3000SNSS
- Slate - JTS3000ENES
- White - JTS3000DNWW
- Black - JTS3000DNBB



30" SMART BUILT-IN DOUBLE WALL OVEN

- Stainless - JTD3000SNSS
- Slate - JTD3000ENES
- White - JTD3000DNWW
- Black - JTD3000DNBB



30" COMBINATION DOUBLE WALL OVEN

- Stainless - JT3800SHSS
- Black - JT3800DHBB



30" BUILT-IN KNOB CONTROL ELECTRIC COOKTOP

- Stainless - JP3030SJSS
- White - JP3030TJWW
- Black - JP3030DJBB

36" BUILT-IN KNOB CONTROL ELECTRIC COOKTOP

- Stainless - JP3036SLSS
- White - JP3036TLWW
- Black - JP3036DLBB



30" BUILT-IN GAS COOKTOP

- Stainless - JGP3030SLSS
- White - JGP3030DLWW
- Black - JGP3030DLBB

36" BUILT-IN GAS COOKTOP

- Stainless - JGP3036SLSS
- White - JGP3036DLWW
- Black - JGP3036DLBB



30" UNDER-THE-CABINET HOOD

- Stainless - JVX3300SJSS
- Slate - JVX3300EJES
- White - JVX3300DJWW
- Black - JVX3300DJBB

36" UNDER-THE-CABINET HOOD

- Stainless - JVX5360SJSS
- Black Stainless – JVX5360BJTS
- Slate - JVX5360EJES
- White - JVX5360DJWW
- Black - JVX5360DJBB



1.1 CU. FT. CAPACITY COUNTERTOP MICROWAVE OVEN

- Stainless - JES1145SHSS
- White - JES1145DLWW
- Black - JES1145DMBB



TOP CONTROL WITH PLASTIC INTERIOR DISHWASHER with Sanitize Cycle & Dry Boost

- Stainless - GDT530PSPSS
- Slate - GDT530PMPES
- White - GDT530PGPWW
- Black - GDT530PGPBB



TOP CONTROL WITH PLASTIC INTERIOR DISHWASHER with Sanitize Cycle & Dry Boost

- Stainless - GDT535PSMSS

*available in front control



TOP CONTROL WITH PLASTIC INTERIOR DISHWASHER with Sanitize Cycle & Dry Boost

- Stainless - GDT605PSMSS
- Slate - GDT605PMMES
- Black Slate – GDT605PFMDS
- White - GDT605PGMWW
- Black - GDT605PGMBB

POWERED BY SmartHQ

GE APPLIANCES

GOLD PACKAGE OPTIONS

For the family kitchen

BUILT-IN



23.1 CU. FT. COUNTER-DEPTH FRENCH-DOOR REFRIGERATOR

- Fingerprint Resistant Stainless - GWE23GYNFS
- Slate - GWE23GMNES
- Black Slate - GWE23GENDS



30" SMART BUILT-IN CONVECTION SINGLE WALL OVEN

- Stainless - JTS5000SNSS
- Slate - JTS5000ENES
- Black Slate - JTS5000FNDS
- White - JTS5000DNWW
- Black - JTS5000DNBB



30" SMART BUILT-IN CONVECTION DOUBLE WALL OVEN

- Stainless - JTD5000SNSS
- Slate - JTD5000ENES
- Black Slate - JTD5000FNDS
- White - JTD5000DNWW
- Black - JTD5000DNBB



30" COMBINATION DOUBLE WALL OVEN

- Stainless - JT3800SHSS
- Black - JT3800DHBB



30" BUILT-IN GAS COOKTOP

- Stainless - JGP5030SLSS
- Black - JGP5030DLBB

36" BUILT-IN GAS COOKTOP

- Stainless - JGP5036SLSS
- Black - JGP5036DLBB



30" BUILT-IN TOUCH CONTROL ELECTRIC COOKTOP

- Stainless - JP5030SJSS
- Black - JP5030DJBB

36" BUILT-IN TOUCH CONTROL ELECTRIC COOKTOP

- Stainless - JP5036SJSS
- Black - JP5036DJBB



30" UNDER-THE-CABINET HOOD

- Stainless - JVX5300SJSS
- Slate - JVX5300EJES
- Black Slate - JVX5300BJTS
- White - JVX5300DJWW
- Black - JVX5300DJBB

36" ENERGY STAR® CERTIFIED UNDER-THE-CABINET HOOD

- Stainless - JVX5365SJSS



1.6 CU. FT. COUNTERTOP MICROWAVE OVEN

- Stainless - JES1657SMSS
- Black Stainless – JES1657BMTS
- White - JES1657DMWW
- Black - JES1657DMBB



FRONT CONTROL WITH PLASTIC INTERIOR DISHWASHER
with Sanitize Cycle & Dry Boost

- Stainless - GDF630PSMSS
- Slate - GDF630PMMES
- White - GDF630PGMWW
- Black - GDF630PGMBB

*Available in top control



TOP CONTROL WITH STAINLESS STEEL INTERIOR DISHWASHER
with Sanitize Cycle & Dry Boost with Fan Assist

- Fingerprint Resistant Stainless - GDP645SYNFS
- Fingerprint Resistant Stainless - GDT645SYNFS
- Stainless - GDT645SSNSS
- Slate - GDT645SMNES
- Black Slate - GDT645SFNDS
- White - GDT645SGNWW
- Black - GDT645SGNBB

*Available in front control

POWERED BY SmartHQ™

GE APPLIANCES

PLATINUM PACKAGE OPTIONS

For the high performing kitchen

BUILT-IN





22.1 CU. FT. COUNTER-DEPTH FRENCH-DOOR REFRIGERATOR

- Fingerprint Resistant Stainless - GYE22GYNFS
- Slate - GYE22GMNES
- Black Slate - GYE22GENDS



30" SMART BUILT-IN CONVECTION SINGLE WALL OVEN

- Stainless - JTS5000SNSS
- Slate - JTS5000ENES
- Black Slate - JTS5000FNDS
- White - JTS5000DNWW
- Black - JTS5000DNBB



30" SMART BUILT-IN CONVECTION DOUBLE WALL OVEN

- Stainless - JTD5000SNSS
- Slate - JTD5000ENES
- Black Slate - JTD5000FNDS



30" BUILT-IN GAS COOKTOP

- Stainless - JGP5030SLSS
- Black - JGP5030DLBB

36" BUILT-IN GAS COOKTOP

- Stainless - JGP5036SLSS
- Black - JGP5036DLBB



30" BUILT-IN TOUCH CONTROL ELECTRIC COOKTOP

- Stainless - JP5030SJSS
- Black - JP5030DJBB

36" BUILT-IN TOUCH CONTROL ELECTRIC COOKTOP

- Stainless - JP5036SJSS



30" WALL-MOUNT PYRAMID CHIMNEY HOOD

- Stainless - JVW5301SJSS
- Black Stainless – JVW5301BJTS
- Slate - JVW5301EJES
- Black Slate - JVW5301FJDS

36" WALL-MOUNT PYRAMID CHIMNEY HOOD

- Stainless - JVW5361SJSS
- Black Stainless – JVW5361BJTS
- Slate - JVW5361EJES
- Black Slate - JVW5361FJDS

Ceiling duct cover kit available



2.0 CU. FT. CAPACITY COUNTERTOP MICROWAVE OVEN

- Stainless - JES2051SNSS
- White - JES2051DNWW
- Black - JES2051DNBB



TOP CONTROL WITH STAINLESS STEEL INTERIOR DISHWASHER
with Sanitize Cycle & Dry Boost with Fan Assist

- Fingerprint Resistant Stainless - GDP665SYNFS
- Stainless - GDT665SSNSS
- Slate - GDT665SMNES
- Black Slate - GDT665SFNDS
- White - GDT665SGNWW
- Black - GDT665SGNBB

POWERED BY SmartHQ



GE APPLIANCES

PLATINUM PACKAGE OPTIONS

(Continued)

BUILT-IN

BEVERAGE CENTER

Stainless - GVS04BQNSS



WINE CENTER

Stainless - GWS04HAESS



ICE MAKER 15" - NUGGET ICE

Panel Ready - UNC15NJII

STAINLESS STEEL ICE MAKER DOOR KIT

Stainless - PIP70SS



ICE MAKER 15" - GOURMET CLEAR ICE

Panel Ready - UCC15NJII

STAINLESS STEEL ICE MAKER DOOR KIT

Stainless - PIP70SS



Profile™

Built-in

PACKAGE OPTIONS

POWERED BY SmartHQ™ Smart Appliance options available in package



Profile™

Silver Package Options

For the modern kitchen

BUILT-IN



23.1 CU. FT. COUNTER-DEPTH FRENCH-DOOR REFRIGERATOR

- Fingerprint Resistant Stainless - PWE23KYNFS
- Slate - PWE23KMKES
- Black Slate - PWE23KELDS



30" SMART BUILT-IN CONVECTION SINGLE WALL OVEN

- Stainless - PTS7000SNSS
- Black Stainless – PTS7000BNTS



30" SMART BUILT-IN CONVECTION DOUBLE WALL OVEN

- Stainless - PTD7000SNSS
- Black Stainless – PTD7000BNTS



30" BUILT-IN COMBINATION CONVECTION MICROWAVE/ CONVECTION WALL OVEN

- Stainless - PT7800SHSS
- Slate - PT7800EKES
- White - PT7800DHWW
- Black - PT7800DHBB



30" BUILT-IN KNOB CONTROL ELECTRIC COOKTOP

- Stainless - PP7030SJSS
- Black Stainless – PP7030BMTS

36" BUILT-IN KNOB CONTROL ELECTRIC COOKTOP

- Stainless - PP7036SJSS
- Black Stainless – PP7036BMTS
- Black - PP7036DJBB



30" BUILT-IN GAS COOKTOP

- Stainless - PGP7030SLSS
- Black Stainless – PGP7030BMTS

36" BUILT-IN GAS COOKTOP

- Stainless - PGP7036SLSS
- Black Stainless – PGP7036BMTS



30" UNDER THE CABINET HOOD

- Stainless - PVX7300SJSS
- Black Slate - PVX7300FJDS

36" UNDER THE CABINET HOOD

- Stainless - PVX7360SJSS
- Black Slate - PVX7360FJDS



30" DESIGNER WALL-MOUNT HOOD with Dimmable LED Lighting

- Stainless - UVW8301SLSS

36" DESIGNER WALL-MOUNT HOOD with Dimmable LED Lighting

- Stainless - UVW8361SLSS

*12 & 14 Ft. Ceiling Duct Cover Kits Available



BUILT-IN MICROWAVE/ CONVECTION OVEN

- Stainless - PWB7030SLSS
- Slate - PWB7030ELES



1.1 CU. FT. COUNTERTOP MICROWAVE OVEN (shown with built-in kit)

- Stainless - PEM31SFSS
- Black Stainless – PEM31BMTS
- Slate - PEM31EFES
- Black Slate - PEM31FMDS
- White - PEM31DFWW
- Black - PEM31DFBB

*Built-In kits available



TOP CONTROL WITH STAINLESS STEEL INTERIOR DISHWASHER with Sanitize Cycle & Dry Boost with Fan Assist

- Fingerprint Resistant Stainless - PDP715SYNFS
- Fingerprint Resistant Stainless - PDT715SYNFS
- Black Stainless - PDP715SBNTS
- Black Stainless - PDT715SBNTS
- Slate - PDT715SMNES
- Black Slate - PDT715SFNDS

POWERED BY SmartHQ



Profile™

Gold Package Options

For the technology enthusiast

BUILT-IN



21.9 CU. FT. COUNTER-DEPTH SIDE-BY-SIDE REFRIGERATOR

- Stainless - PZS22MYKFS



22.1 CU. FT. COUNTER-DEPTH FRENCH-DOOR REFRIGERATOR
with Hands-Free AutoFill

- Fingerprint Resistant Stainless - PYE22KYNFS
- Black Stainless – PYE22KBLTS
- Slate - PYE22KMKES
- Black Slate - PYE22KELDS



30″ SMART BUILT-IN CONVECTION SINGLE WALL OVEN

- Stainless - PTS9000SNSS
- Black Stainless – PTS9000BNTS



30″ SMART BUILT-IN CONVECTION DOUBLE WALL OVEN

- Stainless - PTD9000SNSS
- Black Stainless – PTD9000BNTS



30″ COMBINATION DOUBLE WALL OVEN
with Convection and Advantium® Technology

- Stainless - PT9800SHSS



30″ BUILT-IN TOUCH CONTROL ELECTRIC COOKTOP

- Stainless - PP9030SJSS
- Black - PP9030DJBB

36″ BUILT-IN TOUCH CONTROL ELECTRIC COOKTOP

- Stainless - PP9036SJSS
- Black - PP9036DJBB



30″ BUILT-IN GAS COOKTOP

- Stainless - PGP9030SLSS

36″ BUILT-IN GAS COOKTOP

- Stainless - PGP9036SLSS



30″ DESIGNER WALL-MOUNT HOOD
with Dimmable LED Lighting

- Stainless - UVW8301SLSS

36″ DESIGNER WALL-MOUNT HOOD
with Dimmable LED Lighting

- Stainless - UVW8361SLSS

*12 & 14 Ft. Ceiling Duct Cover Kits Available



30″ SINGLE WALL OVEN
with Advantium® Technology

- Stainless - PSB9120SFSS
- Black Stainless – PSB9120BLTS
- Slate - PSB9120EFES



1.1 CU. FT. COUNTERTOP MICROWAVE OVEN
(shown with built-in kit)

- Stainless - PEM31SFSS
- Black Stainless – PEM31BMTS
- Slate - PEM31EFES
- Black Slate - PEM31FMDS
- White - PEM31DFWW
- Black - PEM31DFBB

*Built-In Kits Available



SMART TOP CONTROL STAINLESS STEEL INTERIOR DISHWASHER
with Sanitize Cycle & Twin Turbo Boost

- Fingerprint Resistant Stainless - PDT775SYNFS
- Black Stainless – PDT775SBNTS

POWERED BY SmartHQ™



Profile™

Platinum Package Options

For the ultimate smart home

BUILT-IN



22.1 CU. FT. COUNTER-DEPTH FRENCH-DOOR REFRIGERATOR
with Door In Door and Hands-Free AutoFill

- Fingerprint Resistant Stainless - PYD22KYNFS
- Black Stainless – PYD22KBLTS



22.1 CU. FT. COUNTER-DEPTH FRENCH-DOOR REFRIGERATOR
with Keurig® K-Cup® Brewing System

- Fingerprint Resistant Stainless - PYE22PYNFS



30" SMART BUILT-IN CONVECTION SINGLE WALL OVEN

- Stainless - PTS9000SNSS
- Black Stainless – PTS9000BNTS



30" COMBINATION DOUBLE WALL OVEN
with Convection and Advantium® Technology

- Stainless - PT9200SLSS



30" SMART BUILT-IN CONVECTION DOUBLE WALL OVEN

- Stainless - PTD9000SNSS
- Black Stainless – PTD9000BNTS



36" BUILT-IN TOUCH CONTROL ELECTRIC COOKTOP

- Stainless - PP9036SJSS
- Black - PP9036DJBB

30" BUILT-IN TOUCH CONTROL ELECTRIC COOKTOP

- Stainless - PP9030SJSS
- Black - PP9030DJBB



36" BUILT-IN GAS COOKTOP

- Stainless - PGP9036SLSS

30" BUILT-IN GAS COOKTOP

- Stainless - PGP9030SLSS



36" BUILT-IN TOUCH CONTROL INDUCTION COOKTOP

- Stainless - PHP9036SJSS
- Black - PHP9036DJBB
- Black Stainless – PHP9036BMTS

30" BUILT-IN TOUCH CONTROL INDUCTION COOKTOP

- Stainless - PHP9030SJSS
- Black - PHP9030DJBB
- Black Stainless – PHP9030BMTS



36" WALL-MOUNT CHIMNEY HOOD

- Stainless - PV976NSS



30" SMART DESIGNER WALL-MOUNT HOOD
with Perimeter Venting

- Stainless - UVW9301SLSS
- Black Stainless – UVW9301BLTS

36" SMART DESIGNER WALL-MOUNT HOOD
with Perimeter Venting

- Stainless - UVW9361SLSS
- Black Stainless – UVW9361BLTS

*High Ceiling Duct Cover Kits Available

POWERED BY SmartHQ™



Profile™

Platinum Package Options

(Continued)

BUILT-IN



30" SINGLE WALL OVEN
with Advantium® Technology

- Stainless - PSB9240SFSS
- Slate - PSB9240EFES
- Black Stainless – PSB9240BLTS



1.5 CU. FT. COUNTERTOP CONVECTION/ MICROWAVE OVEN

- Stainless - PEB9159SJSS
- White - PEB9159DJWW
- Black - PEB9159DJBB
- Slate - PEB9159EJES

*Built-In Kits Available



SMART TOP CONTROL STAINLESS STEEL INTERIOR DISHWASHER
with Sanitize Cycle & Twin Turbo Dry Boost

- Fingerprint Resistant Stainless - PDT785SYNFS
- Black Stainless – PDT785SBNTS



BEVERAGE CENTER

- Stainless - PVS06BSPSS



WINE CENTER

- Stainless - PWS06DSPSS



ICE MAKER 15" - NUGGET ICE
Panel Ready - UNC15NJII

STAINLESS STEEL ICE MAKER DOOR KIT

- Stainless - PIP70SS



ICE MAKER 15" - GOURMET CLEAR ICE
Panel Ready - UCC15NJII

STAINLESS STEEL ICE MAKER DOOR KIT

- Stainless - PIP70SS

POWERED BY SmartHQ™



GE APPLIANCES

CLOTHES CARE
PACKAGE OPTIONS

POWERED BY SmartHQ™ Smart Appliance options available in package



GE APPLIANCES

CLOTHES CARE **PACKAGE OPTIONS**

FRONT LOAD



4.8 CU. FT. CAPACITY
SMART FRONT LOAD WASHER
with UltraFresh Vent System, OdorBlock™ and Sanitize with Oxi

- Diamond Gray - GFW550SPNDG
- White - GFW550SSNWW



4.8 CU. FT. CAPACITY
SMART FRONT LOAD STEAM WASHER
with SmartDispense™ UltraFresh Vent System with OdorBlock and Sanitize + Allergen

- Satin Nickel - GFW650SPNSN
- White - GFW650SSNWW



5.0 CU. FT. CAPACITY
SMART FRONT LOAD STEAM WASHER
with SmartDispense UltraFresh Vent System with OdorBlock and Sanitize + Allergen

- Sapphire Blue - GFW850SPNRS
- Diamond Gray - GFW850SPNDG
- White - GFW850SSNWW



7.8 CU. FT. CAPACITY
SMART FRONT LOAD DRYER
with Sanitize Cycle

- Diamond Gray - GFD55ESPNDG (Electric)
- White - GFD55ESSNWW (Electric)
- Diamond Gray - GFD55GSPNDG (Gas)
- White - GFD55GSSNWW (Gas)



7.8 CU. FT. CAPACITY
SMART FRONT LOAD DRYER
with Steam and Sanitize Cycle

- Satin Nickel - GFD65ESPNSN (Electric)
- White - GFD65ESSNWW (Electric)
- Satin Nickel - GFD65GSPNSN (Gas)
- White - GFD65GSSNWW (Gas)



7.8 CU. FT. CAPACITY
SMART FRONT LOAD DRYER
with Steam and Sanitize Cycle

- Sapphire Blue - GFD85ESPNRS (Electric)
- Diamond Gray - GFD85ESPNDG (Electric)
- White - GFD85ESSNWW (Electric)
- Sapphire Blue - GFD85GSPNRS (Gas)
- Diamond Gray - GFD85GSPNDG (Gas)
- White - GFD85GSSNWW (Gas)



FRONT LOAD
WASHER/DRYER PEDESTAL

- Sapphire Blue - GFP1528PNRS
- Diamond Gray - GFP1528PNDG
- Satin Nickel - GFP1528PNSN
- White - GFP1528SNWW

FRONT LOAD WASHER/DRYER
7" RIGHTHEIGHT™ RISER

- Sapphire Blue - GFR0728PNRS
- Diamond Gray - GFR0728PNDG
- Satin Nickel - GFR0728PNSN
- White - GFR0728SNWW

POWERED BY SmartHQ

GE APPLIANCES

CLOTHES CARE **PACKAGE OPTIONS**

TOP LOAD



4.2 CU. FT. CAPACITY WASHER
with Stainless Steel Basket

- White - GTW335ASNWW

7.2 CU. FT. CAPACITY ALUMINIZED ALLOY DRUM DRYER

- White - GTD33EASKWW (ELECTRIC)
- White - GTD33GASKWW (GAS)



4.5 CU. FT. CAPACITY WASHER
with Stainless Steel Basket

- White - GTW465ASNWW

7.2 CU. FT. CAPACITY ALUMINIZED ALLOY DRUM DRYER

- White - GTD42EASJWW (ELECTRIC)
- White - GTD42GASJWW (GAS)



4.6 CU. FT. CAPACITY WASHER
with Stainless Steel Basket

- White - GTW500ASNWS

7.2 CU. FT. CAPACITY ALUMINIZED ALLOY DRUM DRYER
with Sensor Dry

- White - GTD45EASJWS (ELECTRIC)
- White - GTD45GASJWS (GAS)



4.8 CU. FT. CAPACITY WASHER
with Sanitize with Oxi and FlexDispense™

- Diamond Gray - GTW720BPNDG
- White - GTW720BSNWS

7.4 CU. FT. CAPACITY ALUMINIZED ALLOY DRUM DRYER
with Sanitize Cycle and Sensor Dry

- Diamond Gray - GTD72EBPNDG (ELECTRIC)
- White - GTD72EBSNWS (ELECTRIC)
- Diamond Gray - GTD72GBPNDG (GAS)
- White - GTD72GBSNWS (GAS)



4.6 CU. FT. CAPACITY WASHER
with Sanitize with Oxi and FlexDispense

- Diamond Gray - GTW725BPNDG
- White - GTW725BSNWS

7.4 CU. FT. CAPACITY ALUMINIZED ALLOY DRUM DRYER
with Sanitize Cycle and Sensor Dry

- Diamond Gray - GTD72EBPNDG (ELECTRIC)
- White - GTD72EBSNWS (ELECTRIC)
- Diamond Gray - GTD72GBPNDG (GAS)
- White - GTD72GBSNWS (GAS)



5.2 CU. FT. CAPACITY SMART WASHER
with Sanitize with Oxi and SmartDispense™

- Diamond Gray - GTW840CPNDG
- White - GTW840CSNWS

7.2 CU. FT. CAPACITY SMART ALUMINIZED ALLOY DRUM DRYER
with Sanitize Cycle and Sensor Dry

- Diamond Gray - GTD84ECPNDG (ELECTRIC)
- White - GTD84ECSNWS (ELECTRIC)
- Diamond Gray - GTD84GCPNDG (GAS)
- White - GTD84GCSNW (GAS)



5.0 CU. FT. CAPACITY SMART WASHER
with Sanitize with Oxi and SmartDispense

- Diamond Gray - GTW845CPNDG
- White - GTW845CSNWS

7.4 CU. FT. CAPACITY SMART ALUMINIZED ALLOY DRUM DRYER
with Sanitize Cycle and Sensor Dry

- Diamond Gray - GTD84ECPNDG (ELECTRIC)
- White - GTD84ECSNWS (ELECTRIC)
- Diamond Gray - GTD84GCPNDG (GAS)
- White - GTD84GCSNWS (GAS)

POWERED BY SmartHQ™

WATER SYSTEMS

ELECTRIC WATER HEATERS

FEATURE HIGHLIGHTS



REAL CAPACITY

Get the most hot showers from the only water heaters that hold a real 50, 40 or 30 gallons of water.*



BUILT-IN WIFI

Easily adjust temperatures, set vacation mode schedules and receive notifications with built-in WiFi powered by SmartHQ™.



HIGH FIRST HOUR RATING (FHR)**

Live comfortably with these best-in-class units that deliver a high volume of hot water in the first hour.



QUICK RECOVERY

Two 5500W heating elements quickly increase water temperature for hot water when you need it.



ANODE SENSING

Durable design offers long-lasting protection against corrosion.



DIGITAL DISPLAY

Make easy, accurate adjustments at the touch of a button.



STAINLESS STEEL HEATING ELEMENTS

Ultra-durable stainless steel heating elements resist rust and corrosion.



BRASS DRAIN VALVE

Rustproof construction can be counted on to provide long-lasting service.



EASY SETUP

Replace the old water heater quickly and easily using standard water and electrical connections.

*Compared to 50, 40 and 30 gallon electric steel tank water heaters per DOE rated gallon capacity.
**First Hour Rating (FHR) test simulates hot water usage and indicates how many gallons of water are delivered in one hour before water temperature drops from 125°F to 110°F.

P GE Profile™ G GE Appliances

Not all features available on all models.

ELECTRIC WATER HEATERS



Smart

GE50T12BLM

GE 50-GALLON RATED CAPACITY TALL

- Family size 3 to 5*
- Electronic controls
- Built-in WiFi powered by SmartHQ™
- Normal/Vacation modes
- Two 5,500-watt stainless steel heating elements
- 78-gallon First Hour Rating
- Sensing anode rod
- Brass drain valve

GE50T10BLM (not shown)

- Two 5,500-watt copper heating elements
- Standard anode rod

GE50T10BAM (not shown)

- Thermostat
- Two 5,500-watt stainless steel heating elements
- Brass drain valves

GE50T08BAM (not shown)

- Thermostat
- Two 5,500-watt copper heating elements



Smart

GE50S12BLM

GE 50-GALLON RATED CAPACITY SHORT

- Family size 3 to 5*
- Electronic controls
- Built-in WiFi powered by SmartHQ
- Normal/Vacation modes
- Two 5,500-watt stainless steel heating elements
- 75-gallon First Hour Rating
- Sensing anode rod
- Brass drain valve

GE50S10BLM (not shown)

- Two 5,500-watt copper heating elements
- Standard anode rod

GE50S10BAM (not shown)

- Thermostat
- Two 5,500-watt stainless steel heating elements
- Brass drain valves

GE50S08BAM (not shown)

- Thermostat
- Two 5,500-watt copper heating elements



Smart

GE40T12BLM

GE 40-GALLON RATED CAPACITY TALL

- Family size 2 to 4*
- Electronic controls
- Built-in WiFi powered by SmartHQ
- Normal/Vacation modes
- Two 5,500-watt stainless steel heating elements
- 66-gallon First Hour Rating
- Sensing anode rod
- Brass drain valve

GE40T10BLM (not shown)

- Two 5,500-watt copper heating elements
- Standard anode rod

GE40T10BAM (not shown)

- Thermostat
- Two 5,500-watt stainless steel heating elements
- Brass drain valves

GE40T08BAM (not shown)

- Thermostat
- Two 5,500-watt copper heating elements



Smart

GE40S12BLM

GE 40-GALLON RATED CAPACITY SHORT

- Family size 2 to 4*
- Electronic controls
- Built-in WiFi powered by SmartHQ
- Normal/Vacation modes
- Two 5,500-watt stainless steel heating elements
- 65-gallon First Hour Rating
- Sensing anode rod
- Brass drain valve

GE40S10BLM (not shown)

- Two 5,500-watt copper heating elements
- Standard anode rod

GE40S10BAM (not shown)

- Thermostat
- Two 5,500-watt stainless steel heating elements
- Brass drain valves

GE40S08BAM (not shown)

- Thermostat
- Two 5,500-watt copper heating elements

*Household sizing based on back-to-back showers, 8 minutes long.
Complete features and specifications on page 370.



Smart

GE30T12BLM

GE 30-GALLON RATED CAPACITY TALL

- Family size 1 to 3*
- Electronic controls
- Built-in WiFi powered by SmartHQ
- Normal/Vacation modes
- Two 5,500-watt stainless steel heating elements
- 59-gallon First Hour Rating
- Sensing anode rod
- Brass drain valve

GE30T10BLM (not shown)

- Two 5,500-watt copper heating elements
- Standard anode rod

GE30T10BAM (not shown)

- Thermostat
- Brass drain valves
- Two 5,500-watt stainless steel heating elements

GE30T08BAM (not shown)

- Thermostat
- Two 5,500-watt copper heating elements



Smart

GE30S12BLM

GE 30-GALLON RATED CAPACITY SHORT

- Family size 1 to 3*
- Electronic controls
- Built-in WiFi powered by SmartHQ
- Normal/Vacation modes
- Two 5,500-watt stainless steel heating elements
- 60-gallon First Hour Rating
- Sensing anode rod
- Brass drain valve

GE30S10BLM (not shown)

- Two 5,500-watt copper heating elements
- Standard anode rod

GE30S10BAM (not shown)

- Thermostat
- Two 5,500-watt stainless steel heating elements
- Brass drain valves

GE30S08BAM (not shown)

- Thermostat
- Two 5,500-watt copper heating elements



GE40L08BSM

GE 36-GALLON RATED CAPACITY LOWBOY

- Family size 2 to 4*
- Thermostat
- Two 5,500-watt copper heating elements
- 63-gallon First Hour Rating
- Side port

GE40L08BAM (not shown)

- Top port
- 61-gallon First Hour Rating



GE30L08BSM

GE 26-GALLON RATED CAPACITY LOWBOY

- Family size 1 to 3*
- Thermostat
- Two 5,500-watt copper heating elements
- 58-gallon First Hour Rating
- Side port

GE30L08BAM (not shown)

- Top port
- 53-gallon First Hour Rating



FLEXIBLE-CAPACITY
ELECTRONIC WATER HEATERS

Up to 60% more hot water on X-High setting*

FEATURE HIGHLIGHTS



FLEXIBLE CAPACITY
Choose from three capacity settings to enjoy up to 60% additional hot water when you need it.*



INTEGRATED, ELECTRONIC MIXING VALVE
Access additional hot water to accommodate guests with a valve that lets users select from three capacity settings: Normal, High and X-High.



BUILT-IN WIFI
Easily change water capacity setting, adjust temperatures, set vacation mode, schedules and receive notifications with built-in WiFi powered by SmartHQ™.

*Versus comparable water heater without mixing valve at 120° F setting and 58° F inlet water temperature. Not all features available on all models.

P GE Profile™ G GE Appliances

FLEXIBLE-CAPACITY ELECTRONIC WATER HEATERS



GE50S10BMM
GE 50-GALLON RATED CAPACITY
- Integrated, electronic mixing valve
- Performs like an 80-gallon on X-High setting*
- Up to 60% more hot water on X-High setting*
- Family size: 3 to 6**
- Electronic controls
- Built-in WiFi powered by SmartHQ
- Normal/Vacation modes
- 75-gallon First Hour Rating
- Two 5,500-watt stainless steel heating elements
- Brass drain valve



GE40S10BMM
GE 40-GALLON RATED CAPACITY
- Integrated, electronic mixing valve
- Performs like a 64-gallon on X-High setting*
- Up to 60% more hot water on X-High setting*
- Family size: 2 to 5**
- Electronic controls
- Built-in WiFi powered by SmartHQ
- Normal/Vacation modes
- 65-gallon First Hour Rating
- Two 5,500-watt stainless steel heating elements
- Brass drain valve



GE30S10BMM
GE 30-GALLON RATED CAPACITY
- Integrated, electronic mixing valve
- Performs like a 48-gallon on X-High setting*
- Up to 60% more hot water on X-High setting*
- Family size: 1 to 4**
- Electronic controls
- Built-in WiFi powered by SmartHQ
- Normal/Vacation modes
- 59-gallon First Hour Rating
- Two 5,500-watt stainless steel heating elements
- Brass drain valve

**Household sizing based on back-to-back showers, 8 minutes long.

Complete features and specifications on page 371.

TANKLESS ELECTRIC WATER HEATERS

FEATURE HIGHLIGHTS



UNLIMITED HOT WATER ON DEMAND

Tankless electric water heater provides instant, continuous water flow.



ENERGY EFFICIENT

Conserves energy and water by only using energy when hot water is in use, saving you money.



SELF-MODULATING TECHNOLOGY

Utilizes inlet and outlet temperature sensors to optimize energy usage and keep water temperature consistent.



INTUITIVE DESIGN

Adjust temperature and settings with easy-to-use touch screen.



SPACE SAVER

Compact design takes up significantly less space than a tank-style water heater.



SCALE REDUCTION TECHNOLOGY

Extends the life of the unit by shielding heating elements from water and scale buildup.



PERFORMANCE*

Enough to run three showers and one faucet simultaneously in warm climates.



POINT OF USE

Installs at the point of use, for hot water where you need it.



WHOLE HOME SOLUTION

Easily provides enough hot water for a house or apartment.

*Results are based on 72°F inlet water temperature and 105°F outlet water temperature. in one hour before water temperature drops from 125°F to 110°F.

P GE Profile™ G GE Appliances

Not all features available on all models.

TANKLESS ELECTRIC WATER HEATERS



GE04SNLPDG

GE TANKLESS ELECTRIC POINT-OF-USE WATER HEATER

- Point of use
- Instant hot water on demand
- 3.5 kW
- Operates on 120V
- Touch screen and remote control
- Ideal for under the sink and booster for washer, dishwasher
- Up to 0.7 GPM (gallons per minute)*
- Enough for one sink*



GE06SNLPDG

GE TANKLESS ELECTRIC POINT-OF-USE WATER HEATER

- Point of use
- Instant hot water on demand
- 5.5 kW
- Touch screen and remote control
- Ideal for under the sink and booster for washer, dishwasher
- Up to 1.2 GPM (gallons per minute)*
- Enough for two sinks or one shower*

GE08SNHPDG

GE TANKLESS ELECTRIC POINT-OF-USE WATER HEATER

- Point of use
- Instant hot water on demand
- 8 kW
- Touch screen and remote control
- Ideal for under the sink and booster for a washer, dishwasher
- Up to 1.7 GPM (gallons per minute)*
- Enough for one sink and one shower*

GE11SNHPDG

GE TANKLESS ELECTRIC POINT-OF-USE WATER HEATER

- Point of use
- Instant hot water on demand
- 11 kW
- Touch screen and remote control
- Ideal for under the sink and booster for a washer, dishwasher
- Up to 2.5 GPM (gallons per minute)*
- Enough for two sinks and one shower*



GE15SNHPDG

GE TANKLESS ELECTRIC POINT-OF-USE WATER HEATER

- Point of use
- Instant hot water on demand
- 14.6 kW
- Touch screen and remote control
- Ideal for under the sink and booster for a washer, dishwasher
- Up to 2.9 GPM (gallons per minute)*
- Enough for two sinks and one shower*

GE24DNHPDG

GE TANKLESS ELECTRIC WHOLE HOME WATER HEATER

- Whole Home solution
- Instant hot water on demand
- 24 kW
- Touch screen
- Ideal for small home, apartment, condo
- Booster for laundry, dishwasher
- Up to 5.3 GPM (gallons per minute)*
- Enough for four sinks and two showers*



GE18SNHPDG

GE TANKLESS ELECTRIC WHOLE HOME WATER HEATER

- Point of use/Whole Home solution
- Instant hot water on demand
- 18 kW
- Touch screen
- Ideal for under the sink, small home, apartment, condo
- Booster for laundry, dishwasher
- Up to 3.8 GPM (gallons per minute)*
- Enough for one sink and two showers*

GE27DNHPDG

GE TANKLESS ELECTRIC WHOLE HOME WATER HEATER

- Whole Home solution
- Instant hot water on demand
- 27 kW
- Touch screen
- Ideal for small home, apartment, condo
- Booster for laundry, dishwasher
- Up to 5.4 GPM (gallons per minute)*
- Enough for one sink and three showers*

*Results are based on 72° F inlet water temperature and 105° F outlet water temperature.
Complete features and specifications on page 372.



GEOSPRING™ SOLAR WATER HEATERS

FEATURE HIGHLIGHTS



INTERNAL TANK COATING

Resilient internal coating offers maximum corrosion resistance and trouble-free performance.



STORAGE PIPES

An integrated solar collector allows the tank to maintain hot water temperatures even if the sun isn't shining.

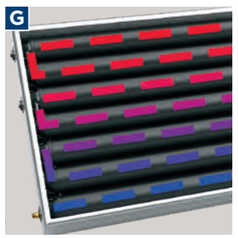

SERPENTINE SYSTEM

Water is heated and stored directly in the solar collector, making hot water available as soon as it is heated by the sun.

P GE Profile™ G GE Appliances

Not all features available on all models.

GEOSPRING SOLAR WATER HEATERS

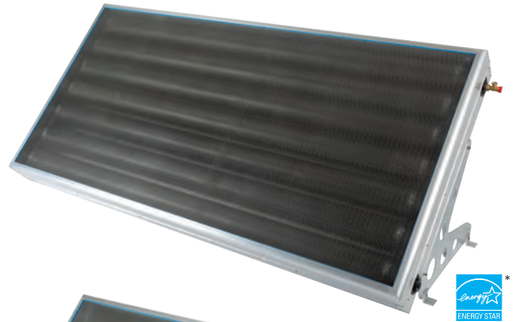

GT50C10BAM

51-GALLON WITH INTEGRATED COLLECTOR STORAGE

- GeoSpring Solar technology
- Solar glass for efficient water heating
- Clear heat insulation delivers maximum heat retention
- Integrated storage pipes maintain temperatures even when the sun is not shining
- Serpentine system makes hot water available immediately
- Internal tank coating offers maximum corrosion resistance

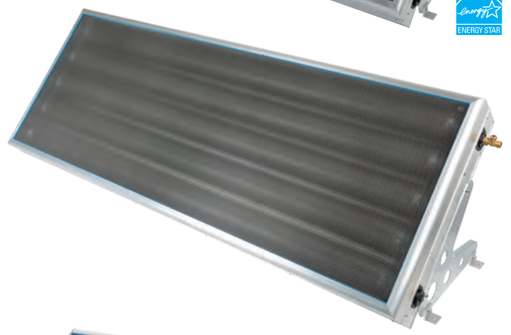

GT40C10BAM

38-GALLON WITH INTEGRATED COLLECTOR STORAGE

- GeoSpring Solar technology
- Solar glass for efficient water heating
- Clear heat insulation delivers maximum heat retention
- Integrated storage pipes maintain temperatures even when the sun is not shining
- Serpentine system makes hot water available immediately
- Internal tank coating offers maximum corrosion resistance

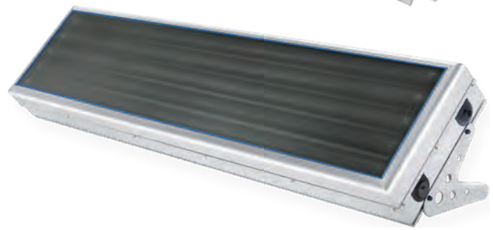

GT25C10BAM

24-GALLON WITH INTEGRATED COLLECTOR STORAGE

- GeoSpring Solar technology
- Solar glass for efficient water heating
- Clear heat insulation delivers maximum heat retention
- Integrated storage pipes maintain temperatures even when the sun is not shining
- Serpentine system makes hot water available immediately
- Internal tank coating offers maximum corrosion resistance



Ground mount installation

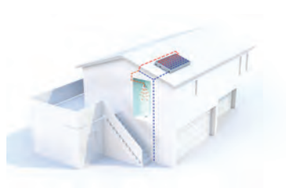

Pitched roof installation

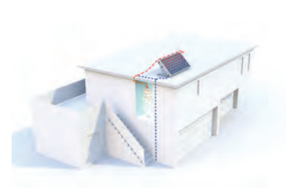

Flat roof installation

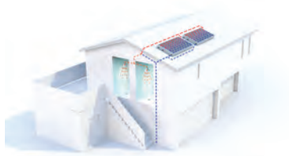

Connected in parallel installation



Combined with additional storage tank installation

*Applies to 51-gallon model when paired with a tankless gas water heater.
Complete features and specifications on page 372.



WATER SOFTENERS

FEATURE HIGHLIGHTS



CUSTOM SELECT™ BLENDING VALVE

Allows you to select how soft you want your water.



WIFI ALERTS AND REMOTE SHUTOFF

Receive alerts to your smartphone when there's a potential leak or running faucet.*

*Requires WiFi signal at softener location.



SALT SAVER

Spend less time maintaining your system and more time enjoying it with Salt Saver, which reduces consumption.

P GE Profile™ G GE Appliances

Not all features available on all models.

WATER SOFTENERS





Smart

GXSHC40N

GE SMART WATER SOFTENER

- **Built-in WiFi powered by SmartHQ™**
- **Flow alerts—WiFi**
- **Remote water shutoff—WiFi**
- **GE Appliances' Custom Select blending valve allows you to select how soft you want your water**
- GE SmartSoft™ technology ensures there is always plenty of softened water available by "learning" a family's water-use patterns
- Reduces scale, protects appliances/water heater, results in softer, brighter clothing
- **Low salt reminders—WiFi**
- **Water consumption tracking—WiFi**
- **40,000 grain capacity**
- Up-front electronic controls with status indicator light
- Self-cleaning sediment filter protects your home's plumbing
- Plumbing connection up to 1-1/4"

GXSH40V

Similar to the GXSHC40N, except no WiFi





GXMH31H

GE WATER SOFTENER & FILTER IN ONE

- **Reduces chlorine taste and odor with built-in water filtration**
- **GE Appliances' Custom Select blending valve allows you to select how soft you want your water**
- GE SmartSoft technology ensures there is always plenty of softened water available by "learning" a family's water-use patterns
- Reduces scale, protects appliances/water heater, results in softer, brighter clothing
- **31,100 grain capacity**
- Salt capacity: 230 lbs.
- Up-front electronic controls with status indicator light
- Self-cleaning sediment filter
- Plumbing connection up to 1-1/4"





GXSH45V

GE WATER SOFTENER

- **GE Appliances' Custom Select blending valve allows you to select how soft you want your water**
- GE SmartSoft technology ensures there is always plenty of softened water available by "learning" a family's water-use patterns
- Uses up to 35% less water*
- Reduces scale, protects appliances/water heater, results in softer, brighter clothing
- **45,100 grain capacity**
- Salt capacity: 230 lbs.
- Up-front electronic controls with status indicator light
- Self-cleaning sediment filter
- Plumbing connection up to 1-1/4"





GXSF30V

GE WATER SOFTENER

- **GE SmartSoft technology ensures there is always plenty of softened water available by "learning" a family's water-use patterns**
- Uses up to 20% less water*
- Reduces scale, protects appliances/water heater, results in softer, brighter clothing
- **30,400 grain capacity**
- Salt capacity: 200 lbs.
- Plumbing connection up to 1"

*Versus previous GE Appliances water softeners and WQA water usage studies.

Complete features and specifications on page 373.
See page 277 for Accessibility Requirements.
For definitions of logos, see pg. 9.



UNDER SINK WATER FILTRATION

FEATURE HIGHLIGHTS



FILTRATION WHERE YOU NEED IT MOST

Easily installs under most sinks.



BETTER-TASTING WATER

Filtered water improves the flavor of coffee, tea, other beverages and food.



PREMIUM FILTRATION

Removes impurities such as lead, PFOS, PFOA, select pharmaceuticals and more.

P GE Profile™ G GE Appliances

Not all features available on all models.

UNDER SINK FILTRATION

PRODUCTS BELOW AVAILABLE ONLY THROUGH PARTS ACCOUNT UNLESS NOTED.



PREMIUM
ADVANCED
BASIC

GXRQ18NBN

GE REVERSE OSMOSIS FILTRATION SYSTEM

- **Reverse osmosis triple-stage filtration—water is filtered 3 times**
- **Reduces 95 impurities that can be found in drinking water, including lead, PFOA/PFOS***
- **Small footprint**
- NSF/ANSI certified
- **Easy-change filter—change filter in a snap with zero mess thanks to a twist/lock design**
- Easy install
- Filters included
- Designer brushed nickel faucet
- Replacement filters: FQ18MN and FQ18PN

USE APPLIANCE ACCOUNT GNRQ18NBN



PREMIUM
ADVANCED
BASIC

GXK185KBL

GE SINGLE-STAGE DRINKING WATER FILTRATION SYSTEM

- Lead reduction
- Dedicated controller turns filtration on/off
- Quick-replace filter—no water shutoff needed
- Recommended filter replacement every 6 months
- System includes: Filtration system, dual-flow filters, chrome filtration controller, batteries, tubing & fittings
- Replacement filter: FQK1K



PREMIUM
ADVANCED
BASIC

GXK285JBL

GE HIGH-FLOW FILTRATION SYSTEM

- **Dual-flow filtration process—1.1 gallons per minute**
- Lead reduction
- Filtered water through existing faucet
- Dedicated controller turns filtration on/off
- Quick-replace filter—no water shutoff needed
- Recommended filter replacement every 6 months
- System includes: Filtration system, dual-flow filters, chrome filtration controller, batteries, tubing & fittings
- Replacement filter: FQK2J

USE APPLIANCE ACCOUNT GNK285KBL



PREMIUM
ADVANCED
BASIC

GX1S01R

GE DRINKING WATER FILTRATION SYSTEM

- Lead reduction with FXUVC or FXULC
- System installs below kitchen sink
- Filtered water recommended through dedicated faucet (UNFCTFBL - Faucet sold separately)
- 6-month filter life (varies with local water conditions)
- Filter not included
- Replacement filters:
  FXUVC (Advanced)
  FXULC (Advanced)
  FXUTC (Basic)



PREMIUM
ADVANCED
BASIC

GXULQK

GE HIGH-FLOW FAUCET FILTRATION SYSTEM

- Lead reduction
- Single-stage filtration means water is filtered once
- **High-flow filtered water through main faucet**
- Magnetic filter change reminder light
- Quick-replace filter—no water shutoff needed
- Recommended filter replacement every 6 months or 2,000 gallons
- Filter included
- Replacement filter: GXULQR

*Impurities not necessarily in all users' water.

Complete features and specifications on pages 374–375.

Bold = feature upgrade from previous model.



WHOLE HOUSE FILTRATION

FEATURE HIGHLIGHTS



CLEAN WATER IN EVERY ROOM

Filter water at the source for better-tasting water with fewer impurities* at every faucet.

*Impurities not necessarily in all users' water.



WIFI ALERTS AND REMOTE WATER SHUTOFF

Receive alerts to your smart phone when there's a potential leak or running faucet.**

**Requires WiFi signal at filter location.



EASY INSTALLATION

Install the system in minutes with push-to-connect fittings and rotating pivot head.

P GE Profile™ G GE Appliances

Not all features available on all models.

WHOLE HOUSE FILTRATION

PRODUCTS BELOW AVAILABLE ONLY THROUGH PARTS ACCOUNT UNLESS NOTED.



GXWH70M

GE SMART WHOLE HOUSE STANDARD-FLOW FILTRATION SYSTEM

- **Built-in WiFi powered by SmartHQ™ (leak detection, remote water shutoff, consumption tracking, filter change reminders)**
- **Lead reduction with FTHLM**
- **Easy install (push-to-connect fittings)**
- High or standard flow
- Premium filtration (filter sold separately)
- 3-position valve with bypass option for drier filter change
- Filter not included
- Compatible filters: FTHLM (Premium) FTHTM (Advanced) FTHPM (Basic)

PREMIUM ADVANCED BASIC



GXWH50M

GE WHOLE HOUSE STANDARD-FLOW FILTRATION SYSTEM

- **Lead reduction with FTHLM**
- **Easy install (push-to-connect fittings)**
- High or standard flow
- Premium filtration (filter sold separately)
- 3-position valve with bypass option for drier filter change
- Includes magnetic filter reminder light
- Filter not included
- Compatible filters: FTHLM (Premium) FTHTM (Advanced) FTHPM (Basic)

PREMIUM ADVANCED BASIC



GXWH40L

GE HIGH-FLOW WHOLE HOUSE FILTRATION SYSTEM WITH CLEAR SUMP

- High flow
- Customize filtration (filter sold separately)
- **Clear sump to view filter soil level—reduces dirt, silt, sand and rust from your water**
- **3-position valve with bypass option and red pressure release button for drier filter change**
- Includes magnetic filter reminder light, wrench and mounting bracket
- Filter not included
- Compatible filters: FXHTC (Advanced) FXHSC (Basic)

PREMIUM ADVANCED BASIC

USE APPLIANCE ACCOUNT GNWH38S

GNWH38S includes FXHTC filter



GXWH35F

GE HIGH-FLOW WHOLE HOUSE FILTRATION SYSTEM

- **High flow**
- Customize filtration (filter sold separately)
- Reduces dirt, silt, sand and rust from your water
- Red pressure release button for drier filter change
- Includes magnetic filter reminder light, wrench and mounting bracket
- Filter not included
- Compatible filters: FXHTC (Advanced) FXHSC (Basic)

PREMIUM ADVANCED BASIC



GXWH20S

GE STANDARD-FLOW WHOLE HOUSE FILTRATION SYSTEM WITH CLEAR SUMP

- Standard flow
- **FXUSC filter included**
- **Clear sump to view filter soil level—reduces dirt, silt, sand and rust from your water**
- **3-position valve with bypass option and red pressure release button for drier filter change**
- Includes magnetic filter reminder light, wrench and mounting bracket
- Filter included
- Compatible filters: FXWTC (Advanced) FXUSC (Basic) FXWPC (Basic) FXWSC (Basic)

PREMIUM ADVANCED BASIC



GXWH04F

GE STANDARD-FLOW WHOLE HOUSE FILTRATION SYSTEM

- Standard flow
- Customize filtration (filter sold separately)
- Reduces dirt, silt, sand and rust from your water
- Red pressure release button for drier filter change
- Includes magnetic filter reminder light, wrench and mounting bracket
- Filter not included
- Compatible filters: FXWTC (Advanced) FXUSC (Basic) FXWPC (Basic) FXWSC (Basic)

PREMIUM ADVANCED BASIC

Standard flow = 3/4" plumbing. High flow = 1" plumbing.
Complete features and specifications on pages 373–374.
Bold = feature upgrade from previous model.

CONSUMER COMFORT PRODUCTS



WINDOW ROOM AIR CONDITIONERS

FEATURE HIGHLIGHTS



COMFORT COOL

Choose from three cooling modes and fan speeds for a cooling performance that is optimized for your ultimate comfort and convenience.



CONNECTED PEACE OF MIND

Integration with the SmartHQ™ app allows you to monitor, schedule and control your connected air conditioner from anywhere.



ENERGY STAR® CERTIFIED

ENERGY STAR certified air conditioners, delivering the same great cooling while using less energy and reducing your utility bills.

P GE Profile™ G GE Appliances

Not all features available on all models.

ULTRA-QUIET ROOM AIR CONDITIONERS Seasonal Availability Only



PHC06LY

GE PROFILE™ SMART WINDOW UNIT

- 6,150 BTU, 11.5 CEER, 115 Volts
- Fixed chassis
- Quietest in the Industry*
- Electronic digital thermostat with remote
- EZ Mount window kit
- Connected peace of mind
- Connected performance
- Connected voice control
- Auto dimming
- Filter reminder
- Delay function



PHC08LY

GE PROFILE SMART WINDOW UNIT

- 8,100 BTU, 11.4 CEER, 115 Volts
- Fixed chassis
- 50% quieter than similar GE models based on perceived loudness**
- Electronic digital thermostat with remote
- EZ Mount window kit
- Connected peace of mind
- Connected performance
- Connected voice control
- Auto dimming
- Filter reminder
- Delay function

WINDOW ROOM AIR CONDITIONERS Seasonal Availability Only



AHFK24AA

GE SMART ELECTRONIC UNIT

- 23,500/22,900 BTU, 9.8 CEER, 230/208 Volts
- Electronic digital thermostat with remote
- 3 cool/3 fan speeds
- EZ Mount window kit with slide-out chassis
- Energy Saver feature
- Filter reminder light
- Power interruption restart
- Non-ozone-depleting (R-410A)
- 24-hour on/off timer

*Based on published data.
**Based on perceived loudness.
While limited quantities last.
Complete features and specifications on page 376.
For definitions of logos, see page 9.

WINDOW ROOM AIR CONDITIONERS Seasonal Availability Only



AHFK18AA

GE SMART ELECTRONIC UNIT

- 18,000/17,800 BTU, 11.3 CEER, 230/208 Volts
- Electronic digital thermostat with remote
- 3 cool/3 fan speeds
- EZ Mount window kit with slide-out chassis
- Energy Saver feature
- Filter reminder light
- Power interruption restart
- Non-ozone-depleting refrigerant (R-410A)
- 24-hour on/off timer

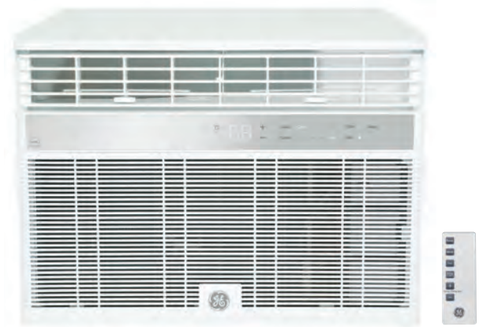

AHY14LZ

GE SMART ELECTRONIC UNIT

- 14,000 BTU, 11.3 CEER, 115 Volts
- Electronic digital thermostat with remote
- 3 cool/3 fan speeds
- EZ Mount window kit with fixed chassis
- Energy Saver feature
- Filter reminder light
- Power interruption restart
- R-32 refrigerant
- 24-hour on/off timer

AHY12LZ

GE SMART ELECTRONIC UNIT

- 12,000 BTU, 11.4 CEER, 115 Volts
- Electronic digital thermostat with remote
- 3 cool/3 fan speeds
- EZ Mount window kit with fixed chassis
- Energy Saver feature
- Filter reminder light
- Power interruption restart
- R-32 refrigerant
- 24-hour on/off timer



AHY10LZ

GE SMART ELECTRONIC UNIT

- 10,000 BTU, 11.4 CEER, 115 Volts
- Electronic digital thermostat with remote
- 3 cool/3 fan speeds
- EZ Mount window kit with fixed chassis
- Energy Saver feature
- Filter reminder light
- Power interruption restart
- R-32 refrigerant
- 24-hour on/off timer

While limited quantities last.
Complete features and specifications on page 376.
For definitions of logos, see page 9.



AHY08LZ

GE SMART ELECTRONIC UNIT

- 8,000 BTU, 11.4 CEER, 115 Volts
- Electronic digital thermostat with remote
- 3 cool/3 fan speeds
- EZ Mount window kit with fixed chassis
- Energy Saver feature
- Filter reminder light
- Power interruption restart
- R-32 refrigerant
- 24-hour on/off timer



AHQ06LZ

GE ELECTRONIC UNIT

- 6,000 BTU, 11.1 CEER, 115 Volts
- Electronic digital thermostat with remote
- 3 cool/3 fan speeds
- EZ Mount window kit with fixed chassis
- Energy Saver feature
- Power interruption restart
- R-32 refrigerant
- 24-hour on/off timer



AHV05LZ

GE MECHANICAL UNIT

- 5,050 BTU, 11.0 CEER, 115 Volts
- Mechanical thermostat
- 2 cool/2 fan speeds
- EZ Mount window kit with fixed chassis
- R-32 refrigerant

HEAT/COOL WINDOW ROOM AIR CONDITIONERS Seasonal Availability Only



AEE24DT

GE HEAT/COOL UNIT

- 24,000/23,600 BTU (Cool), 9.4/9.4 CEER, 230/208 Volts
- 11,000/8,700 BTU (Heat)
- Electronic digital thermostat with remote
- Energy Saver feature
- 3 cool/3 heat/3 fan speeds
- EZ Mount window kit with slide-out chassis
- Non-ozone-depleting refrigerant (R-410A)
- Easy-access filter



AEE18DT

GE HEAT/COOL UNIT

- 17,600/17,300 BTU (Cool), 10.7/10.7 CEER, 230/208 Volts
- 11,000/8,700 BTU (Heat)
- Electronic digital thermostat with remote
- Energy Saver feature
- 3 cool/3 heat/3 fan speeds
- EZ Mount window kit with slide-out chassis
- Non-ozone-depleting refrigerant (R-410A)
- Easy-access filter



AEE12DT

GE HEAT/COOL UNIT

- 11,800/11,600 BTU (Cool), 10.9/10.9 CEER, 230/208 Volts
- Adjustable thermostat
- Electronic digital thermostat with remote
- Energy Saver feature
- 3 cool/3 heat/3 fan speeds
- EZ Mount window kit with slide-out chassis
- Non-ozone-depleting refrigerant (R-410A)
- Easy-access filter

While limited quantities last.
Complete features and specifications on page 377.
For definitions of logos, see page 9.



AEE08AT

GE HEAT/COOL UNIT

- 8,000 BTU (Cool), 10.9 CEER, 115 Volts
- 3,800 BTU (Heat)
- Electronic digital thermostat with remote
- Energy Saver feature
- 3 cool/3 heat/3 fan speeds
- EZ Mount window kit with slide-out chassis
- Non-ozone-depleting refrigerant (R-410A)
- Easy-access filter



AHE24DZ

GE HEAT/COOL UNIT

- 23,500 BTU (Cool), 9.4 CEER, 230/208 Volts
- 11,000/8,500 BTU (Heat)
- Electronic digital thermostat with remote
- Energy Saver feature
- 3 cool/3 heat/3 fan speeds
- EZ Mount window kit with slide-out chassis
- Non-ozone-depleting refrigerant (R-410A)
- Easy-access filter

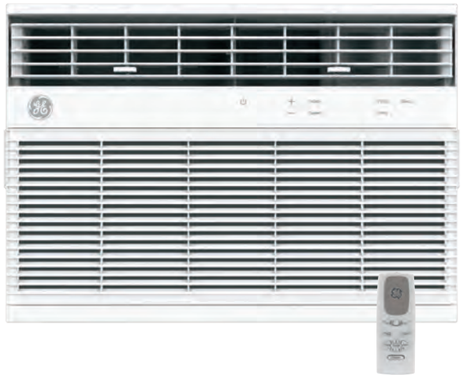

AHE18DZ

GE HEAT/COOL UNIT

- 18,000 BTU (Cool), 10.7 CEER, 230/208 Volts
- 11,000/8,500 BTU (Heat)
- Electronic digital thermostat with remote
- Energy Saver feature
- 3 cool/3 heat/3 fan speeds
- EZ Mount window kit with slide-out chassis
- Non-ozone-depleting refrigerant (R-410A)
- Easy-access filter

*Not intended to be a primary source of heat.

HEAT/COOL WINDOW ROOM AIR CONDITIONERS Seasonal Availability Only



AHE12DZ

GE HEAT/COOL UNIT

- 12,000 BTU (Cool), 10.9 CEER, 230/208 Volts
- 10,700/8,700 BTU (Heat)
- Electronic digital thermostat with remote
- Energy Saver feature
- 3 cool/3 heat/3 fan speeds
- EZ Mount window kit with slide-out chassis
- Non-ozone-depleting refrigerant (R-410A)
- Easy-access filter

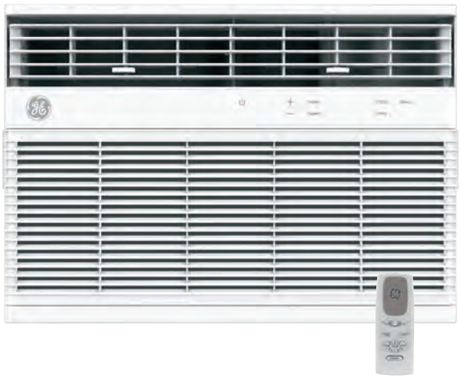

AHE08AZ

GE HEAT/COOL UNIT

- 8,000 BTU (Cool), 10.9 CEER, 115 Volts
- 3,700 BTU (Heat)
- Adjustable thermostat
- Electronic digital thermostat with remote
- Energy Saver feature
- 3 cool/3 heat/3 fan speeds
- EZ Mount window kit with slide-out chassis
- Non-ozone-depleting refrigerant (R-410A)
- Easy-access filter

While limited quantities last.
Complete features and specifications on page 377.
For definitions of logos, see page 9.

PORTABLE ROOM AIR CONDITIONERS



Seasonal Availability Only



APWA14YZMW

GE PORTABLE AIR CONDITIONER

- Built-in WiFi powered by SmartHQ™
- Cools up to 550 sq. ft.
- 9,700 SACC
- Electronic controls
- Full-function remote
- 3 cool/3 fan speeds
- 24-hour timer
- Dehumidify Mode
- CEC compliant



APCA14YZMW

GE PORTABLE AIR CONDITIONER

- Cools up to 550 sq. ft.
- 9.700 SACC
- Electronic controls
- Full-function remote
- 3 cool/3 fan speeds
- 24-hour timer
- Dehumidify Mode
- CEC compliant

While limited quantities last.
Complete features and specifications on page 377.
For definitions of logos, see page 9.

PORTABLE ROOM AIR CONDITIONERS



APSA13YZMW

GE PORTABLE AIR CONDITIONER

- Cools up to 550 sq. ft.
- 9,450 SACC
- 10,000 BTU Heat
- Heat Pump Mode
- Electronic controls
- Full-function remote
- 3 cool/3 fan/3 heat speeds
- 24-hour timer
- Dehumidify Mode
- CEC compliant



APCA12YZMW

GE PORTABLE AIR CONDITIONER

- Cools up to 450 square feet
- 8,200 SACC
- Electronic controls
- Full-function remote
- 3 cool/3 fan speeds
- 24-hour timer
- Dehumidify Mode
- CEC compliant



APCA10YZMW

GE PORTABLE AIR CONDITIONER

- Cools up to 350 square feet
- 6,700 SACC
- Electronic controls
- Full-function remote
- 3 cool/3 fan speeds
- 24-hour timer
- Dehumidify Mode
- CEC compliant



APCA09YZMW

GE COOL UNIT

- Cools up to 250 sq. ft.
- 5,600 SACC
- Electronic controls
- Full-function remote
- 3 cool/3 fan speeds
- 24-hour timer
- Dehumidify Mode
- CEC compliant

While limited quantities last.
Complete features and specifications on page 377.
For definitions of logos, see page 9.



Seasonal Availability Only



APER50LZ

GE DEHUMIDIFIER

- 50 pints per day per new DOE* requirements
- Digital humidistat
- Built-in pump
- 3 fan speeds
- Filter check reminder
- Bucket full indicator
- 2-hour/4-hour
- Auto restart and defrost
- Easy-roll casters
- Permanent washable filter
- Direct drain connection

*Department of Energy



BUILT-IN ROOM AIR CONDITIONERS

FEATURE HIGHLIGHTS

24" UNIVERSAL FIT ROOM AIR CONDITIONERS

UNIVERSAL FIT G

Simple slide-in installation is made for a precise fit into a variety of different wall sleeves.
Trim kit and installation kit included.

LARGE LCD DISPLAY G

Intuitive and easy-to-read LCD display controls room air comfort at a single touch.

DRY MODE G

Designed for humid environments, it helps provide a dryer and more comfortable environment with room-air dehumidification.

ECO MODE G

Innovative mode where the fan cycles off between cooling intervals, saving energy while keeping the room comfortable.

26" BUILT-IN ROOM AIR CONDITIONERS

TRUE BUILT-IN DESIGN G

The ultimate fit and finish for more usable space and the best in built-in installation. Sleeve and chassis are perfectly matched, creating a seamless fit without leaks or gaps.

ELECTRONIC CAP TOUCH CONTROLS G

Controls offer a high-end and smooth-to-the-touch panel.

PREMIUM GUARD SEACOAST PROTECTION* G

Premium Seacoast Protection on heat/cool models uses stainless steel screws, special coatings and double coats of paint on key components including coils, base pan, compressor.

BUILT-IN WIFI POWERED BY SmartHQ™ G

Keeping your place cool, no matter where you are. Monitor, control and create your own cooling schedule through the SmartHQ app.

P GE Profile™ G GE Appliances

Not all features available on all models.
*Heat/cool models only.

BUILT-IN ROOM AIR CONDITIONERS





ACCESSORY
RAB24 Wall sleeve

GE 24" UNIVERSAL FIT ROOM AIR CONDITIONER, STANDARD-MOUNT

COOL-ONLY UNITS

AKCQ10DCH
10,200/9,900 BTU, 10.6/10.6 CEER, 230/208 Volts

AKCQ12DCH
12,100/11,750 BTU, 10.5/10.5 CEER, 230/208 Volts

AKCQ14DCH†
14,000/14,000 BTU, 9.3/9.3 CEER, 230/208 Volts

AKCQ08ACH
8,550 BTU, 10.6 CEER, 115 Volts

AKCQ10ACH
10,000 BTU, 10.6 CEER, 115 Volts

AKCQ12ACH
12,000 BTU, 10.5 CEER, 115 Volts

HEAT/COOL UNITS

AKEQ10DCH
10,000/9,800 BTU, 9.6/9.6 CEER, 230/208 Volts

AKEQ12DCH
12,000/11,600 BTU, 9.5/9.5 CEER, 230/208 Volts

AKEQ14DCH
14,000/13,600 BTU, 9.3/9.4 CEER, 230/208 Volts

†Not ENERGY STAR certified.





GE 26" STANDARD-MOUNT, COOL-ONLY UNITS**

AJCQ10DWH
10,150/9,900 BTU, 10.6/10.6 CEER, 230/208 Volts

AJCQ12DWH
12,000/11,700 BTU, 10.5/10.5 CEER, 230/208 Volts

AJCQ14DWH†
14,000/13,500 BTU, 9.3/9.5 CEER, 230/208 Volts
†Not ENERGY STAR certified

AJCQ06LWH
6,300 BTU, 11.0 CEER, 115 Volts

AJCQ08AWH
8,400 BTU, 10.6 CEER, 115 Volts

AJCQ10AWH
10,000 BTU, 10.6 CEER, 115 Volts

AJCQ12AWH
12,000 BTU, 10.5 CEER, 115 Volts

GE 26" HIGH-MOUNT, COOL-ONLY UNITS**

AJCM10DWH
10,150/9,900 BTU, 10.6/10.6 CEER, 230/208 Volts

AJCM12DWH
12,000/11,700 BTU, 10.5/10.5 CEER, 230/208 Volts

AJCM08AWH
8,400 BTU, 10.6 CEER, 115 Volts

AJCM10AWH
10,000 BTU, 10.6 CEER, 115 Volts





GE 26" STANDARD-MOUNT HEAT/COOL UNITS**

AJEQ08AWH***
8,300 BTU cool, 4,200 BTU heat, 9.6 CEER, 115 Volts

AJEQ10DWH
10,000/9,800 BTU cool, 10,600/8,600 BTU heat, 9.6/9.6 CEER, 230/208 Volts

AJEQ12DWH
12,000/11,700 BTU cool, 10,600/8,600 BTU heat, 9.5/9.5 CEER, 230/208 Volts

AJEQ14DWH
14,000/13,600 BTU cool, 10,600/8,600 BTU heat 9.3/9.5 CEER, 230/208 Volts

HEAT PUMPS

AJHQ08AWH
8,200 BTU cool, 9.8 CEER, 6,650 BTU rev cycle heat 4,200 BTU electric heat, 115 Volts

AJHQ12DWH
11,500/11,100 BTU cool, 8,500/8,300 BTU rev cycle heat 10,600/8,600 BTU electric heat 9.6/9.6 CEER, 230/208 Volts

GE 26" HIGH-MOUNT HEAT/COOL UNIT**

AJEM12DWH
12,000/11,700 BTU cool, 10,600/8,600 BTU heat, 9.5 /9.5 CEER, 230/208 Volts

Specifications subject to change.
Complete features and specifications on pages 378-379.
See page 277 for Accessibility Requirements.
For definitions of logos, see page 9.

ACCESSORIES

RAB46A Standard wall sleeve
RAG13A Stamped aluminum grille
RAG14E Architectural grille
RAD10 Internal/External drain kit
RAA85 Replacement filter
RAK26TO Tenant option panels to seal sleeve if chassis not installed

**Wall case sold separately and includes RAG13A aluminum grille.
***This unit is not intended to be the primary source of heat.

ZONELINE® PACKAGED TERMINAL
AIR CONDITIONERS

FEATURE HIGHLIGHTS



QUIETEST PTAC IN THE INDUSTRY*

Zoneline has the largest fan vs. leading competitor designs, which means less rotation and quieter performance.



BLOWER & DC MOTORS

Large cross-flow blower, two DC fan motors and smart-fan cooling and heating keep the unit quiet while providing efficient performance.



PREMIUM GUARD CORROSION PROTECTION

Special coatings, paints and stainless steel ensure lasting performance in challenging environments such as oceanfront properties.



WEATHER BARRIER SYSTEM SEAL

Keeps noise, dirt and grime outside. Creates a quieter room and more efficient operation.



HEAT & FREEZE SENTINEL

Keeps room from overheating or freezing to increase efficiency and comfort while decreasing operating and maintenance costs.



SYSTEM COMPATIBILITY

Compatible with a wide variety of 24VAC thermostats and energy management systems, including central desk control.



MAKEUP AIR

A factory-installed secondary system provides continuous outdoor air. The supplemental dehumidification system operates when relative humidity levels rise above 55%.



INTERNAL CONDENSATE REMOVAL (ICR)

A system of piping and pump minimizes the amount of condensate draining from the unit when in heat pump mode.



DRY AIR 25**

Zoneline Dry Air models remove 20%-35% more moisture from the air than standard Zoneline air conditioners**, making them perfect for high-humidity climates.

*When compared to leading competitors. 12,000 BTUh heat pump models tested by independent third party at a national acoustical lab, in accordance with ASTM and AHRI standards. All Zonelines have an STC of 29. The higher the STC, the better the unit blocks outside noise.
**Varies when comparing dehumidification rates of the 7,000/9,000/12,000 BTU base models to their Dry Air model counterparts. AZ45 Series electric resistance models only.

P GE Profile™ G GE Appliances

Not all features available on all models.

ZONELINE® PACKAGED TERMINAL AIR CONDITIONERS

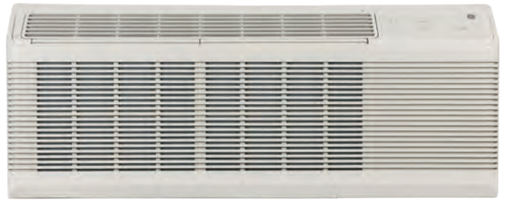



AZ45 SERIES | COOLING AND ELECTRIC HEAT

- Digital LED display
- Variable fresh air vent control
- Cross-flow blower
- Two DC fan motors
- Smart fan cooling
- Heat and Freeze Sentinel
- Remote thermostat capability
- Electronic temperature limiting
- Works with central desk control and through wall fans

BASE

AZ45E07DAB
7,200/7,000 BTU
13.4/13.4 EER
230/208 Volts

AZ45E09DAB
9,700/9,600 BTU
12.1/12.1 EER
230/208 Volts

AZ45E12DAB
11,600/11,500 BTU
11.7/11.8 EER
230/208 Volts

AZ45E15DAB
14,200/14,100 BTU
10.5/10.5 EER
230/208 Volts

PREMIUM GUARD CORROSION PROTECTION

AZ45E07DAC
7,200/7,000 BTU
13.4/13.4 EER
230/208 Volts

AZ45E09DAC
9,400/9,300 BTU
11.8/11.8 EER
230/208 Volts

AZ45E12DAC
11,600/11,500 BTU
11.7/11.8 EER
230/208 Volts

AZ45E15DAC
14,000/13,900 BTU
10.3/10.4 EER
230/208 Volts

AZ45E07EAC
7,100 BTU
13.2 EER
265 Volts

AZ45E09EAC
9,500 BTU
11.6 EER
265 Volts

AZ45E12EAC
11,500 BTU
11.7 EER
265 Volts

AZ45E15EAC
14,700 BTU
10.5 EER
265 Volts

DRY AIR 25 WITH CORROSION PROTECTION

AZ45E07DAP
6,900/6,800 BTU
12.8/12.8 EER
230/208 Volts

AZ45E09DAP
9,400/9,300 BTU
12.1/12.1 EER
230/208 Volts

AZ45E12DAP
11,200/11,000 BTU
11.4/11.5 EER
230/208 Volts

AZ45E09EAP
9,400 BTU
12.1 EER
265 Volts

AZ45E12EAP
10,900 BTU
11.0 EER
265 Volts

AZ65 SERIES | HEAT PUMP

Includes all resistance heat features, plus:

- Staged heating
- Heat pump with backup resistance heat option
- Reverse cycle defrost

BASE

AZ65H07DAB
7,100/6,900 BTU cool
6,200/6,100 BTU heat
13.0/13.0 EER
4.0/4.0 COP*
230/208 Volts

AZ65H09DAB
9,700/9,600 BTU cool
8,100/8,000 BTU heat
12.2/12.2 EER,
3.7/3.7 COP*
230/208 Volts

AZ65H12DAB
11,900/11,800 BTU
cool 10,400/10,300
BTU heat 11.6/11.8 EER
3.6/3.6 COP*
230/208 Volts

AZ65H15DAB
14,400/14,200 BTU
cool 13,500/13,300
BTU heat
10.5/10.5 EER
3.2/3.2 COP*
230/208 Volt

PREMIUM GUARD CORROSION PROTECTION

AZ65H07DAC
7,100/7,000 BTU cool
6,200/6,100 BTU heat
13.0/13.0 EER
4.0/4.0 COP*
230/208 Volts

AZ65H09DAC
9,600/9,500 BTU cool
8,100/8,000 BTU heat
12.2/12.2 EER
3.7/3.7 COP*
230/208 Volts

AZ65H12DAC
11,800/11,600 BTU
cool 10,300/10,200
BTU heat
11.8/11.8 EER
3.6/3.6 COP*
230/208 Volts

AZ65H15DAC
14,400/14,200 BTU
cool 13,200/13,000
BTU heat
10.4/10.4 EER
3.2/3.2 COP*
230/208 Volts

AZ65H07EAC
7,000 BTU cool
6,200 BTU heat
12.8 EER
3.9 COP*
265 Volts

AZ65H09EAC
9,500 BTU cool
8,100 BTU heat
11.7 EER
3.6 COP*
265 Volts

AZ65H12EAC
11,500 BTU cool
10,000 BTU heat
11.2 EER
3.5 COP*
265 Volts

AZ65H15EAC
14,000 BTU cool
13,200 BTU heat
10.0 EER
3.1 COP*
265 Volts

INTERNAL CONDENSATE REMOVAL

AZ65H07DAD
7,000/6,900 BTU
cool, 6,200/6,000
BTU heat, 13.0/13.0
EER, 4.0/4.0 COP*
230/208 Volts

AZ65H09DAD
9,600/9,500 BTU
cool, 8,200/8,000
BTU heat, 12.0/12.0
EER, 3.6/3.6 COP*
230/208 Volts

AZ65H12DAD
11,800/11,600 BTU
cool, 10,400/10,200
BTU heat, 11.5/11.5
EER, 3.5/3.5 COP*
230/208 Volts

AZ65H15DAD
14,100/14,100 BTU
cool, 13,200/13,000
BTU heat, 10.3/10.3
EER, 3.2/3.2 COP*
230/208 Volts

AZ65H07EAD
7,000 BTU cool
6,200 BTU heat
12.8 EER
3.9 COP*
265 Volts

AZ65H09EAD
9,500 BTU cool
8,100 BTU heat
11.7 EER
3.5 COP*
265 Volts

AZ65H12EAD
11,600 BTU cool
10,000 BTU heat
11.4 EER
3.4 COP*
265 Volts

AZ65H15EAD
14,200 BTU cool
13,300 BTU heat
10.3 EER
3.2 COP*
265 Volts

Specifications subject to change.
Complete features and specifications on pages 381-384.

*Coefficient of Performance

AZ45 SERIES | COOLING AND ELECTRIC HEAT WITH MAKEUP AIR

Includes all AZ45 features, plus:

- Delivers 25-50 CFM of continuous makeup air
- Dehumidifies incoming air when outdoor relative humidity is above 55% and outdoor temperatures are above 50° F
- Motorized vent door
- May reduce the need for rooftop units

MAKEUP AIR

AZ45E09DBM
9,100/9,100 BTU
11.5/11.5 EER
230/208 Volts

AZ45E12DBM
11,700/11,500 BTU
11.6/11.6 EER
230/208 Volts

NOTE: Because makeup air increases room BTU load requirements and requires additional PTAC cooling or heating, the building's electrical needs may be impacted.

NOTE: Makeup air models are not recommended for installation within two miles of coastal areas.

NOTE: It is strongly recommended to install makeup air with wall thermostats.

AZ65 SERIES | HEAT PUMP WITH MAKEUP AIR

Includes all resistance heat makeup air features, plus:

- Staged heating
- Heat pump with backup resistance heat option
- Reverse cycle defrost

*Coefficient of Performance

MAKEUP AIR

AZ65H07DBM
7,000/7,000 BTU cool
6,200/6,100 BTU heat
12.5/12.5 EER
4.0/4.0 COP*
230/208 Volts

AZ65H09DBM
9,200/9,100 BTU cool
8,000/7,900 BTU heat
11.3/11.3 EER
3.3/3.3 COP*
230/208 Volts

AZ65H12DBM
11,500/11,400 BTU cool
10,200/10,000 BTU heat
11.2/11.2 EER
3.5/3.5 COP*,
230/208 Volts

AZ65H15DBM
14,000/13,800 BTU cool
13,200/13,000 BTU heat
10.1/10.1 EER, 3.2/3.2
COP*
208/230 Volts

AZ65H07EBM
6,900 BTU cool
6,000 BTU heat
12.5 EER
3.9 COP*
265 Volts

AZ65H09EBM
9,200 BTU cool
8,100 BTU heat
11.5 EER
3.6 COP*
265 Volts

AZ65H12EBM
11,600 BTU cool
10,000 BTU heat
11.3 EER
3.4 COP*
265 Volts

ADDITIONAL ACCESSORIES—MAY BE REQUIRED FOR AZ45/AZ65 SERIES ZONELINE UNITS

MODEL #	DESCRIPTION
RAA13	MERV 13 replacement air filter for RAK13 kit
RAB71B	Wall sleeve
RAB8116B	Wall sleeve, 16", 45 & 65 only
RAB8118B	Wall sleeve, 18", 45 & 65 only
RAB8120B	Wall sleeve, 20", 45 & 65 only
RAB8124B	Wall sleeve, 24", 45 & 65 only
RAB78B	Wall sleeve, 45 & 65 only
RAB81	Quick Snap wall sleeve—unassembled
RAB81B	Quick Snap wall sleeve—assembled
RAD10	Internal/external drain kit
RAG60	Stamped aluminum grille
RAG61/62/63	Architectural exterior grille(s), high-impact plastic. Beige, Maple and Dark Brown
RAG67	Extruded aluminum architectural grille
RAK13	MERV 13 Makeup air filter kit for AZ45/65 DBM/EBM models
RAK44	Curtain Guard (5pk)
RAK149P2	Programmable dual-use single-fan-speed thermostat. Can be set up for single- or two-stage heating.
RAK149F2	Two-fan-speed dual-use digital thermostat. Can be set up for single- or two-stage heat.
RAK180W1	Wired/wireless wall thermostat with motion sensor, MUAM capable
RAK315D	230/208V power connection kit (15 amp) for direct-connected units
RAK320D	230/208V power connection kit (20 amp) for direct-connected units
RAK330D	230/208V power connection kit (30 amp) for direct-connected units
RAK315P	230/208V LCDI power cord connection kit (15 amp)
RAK320P	230/208V LCDI power cord connection kit (20 amp)

MODEL #	DESCRIPTION
RAK330P	230/208V LCDI power cord connection kit (30 amp)
RAK4002D	Zoneline direct-connect junction box (230V)*
RAK515D	265V power connection kit (15 amp) for direct-connected units
RAK520D	265V power connection kit (20 amp) for direct-connected units
RAK530D	265V power connection kit (30 amp) for direct-connected units
RAK204D15C	230/208V sub-base with (15 amp) power cord included
RAK204D20C	230/208V sub-base with (20 amp) power cord included
RAK204D30C	230/208V sub-base with (30 amp) power cord included
RAK204U	230/208V non-electrical sub-base
RAK204E15C	265V sub-base with (15 amp) power cord included
RAK204E20C	265V sub-base with (20 amp) power cord included
RAK204E30C	265V sub-base with (30 amp) power cord included
RAK204SW	Disconnect Switch for use in sub-base DPST switch that fits directly into sub-base for use in 230/208 and 265 volt applications.
RAK315SP	230/208V power cord connection kit (15 amp) for sub-base connected units
RAK320SP	230/208V power cord connection kit (20 amp) for sub-base connected units
RAK330SP	230/208V power cord connection kit (30 amp) for sub-base connected units
RAK515P	265V power cord connection kit (15 amp) for sub-base connected units
RAK520P	265V power cord connection kit (20 amp) for sub-base connected units
RAK530P	265V power cord connection kit (30 amp) for sub-base connected units

*Included with 265V Zoneline

ZONELINE®
ULTIMATEV10™ VERTICAL
AIR CONDITIONERS

10 EXCLUSIVE FEATURES
FOR EASIER INSTALLATION AND OWNER EXPERIENCE



INSTA-PLATFORM™*
One-piece design fully integrates with the wall plenum and aligns for a tight seal. Eliminates need for a customized platform construction on site.

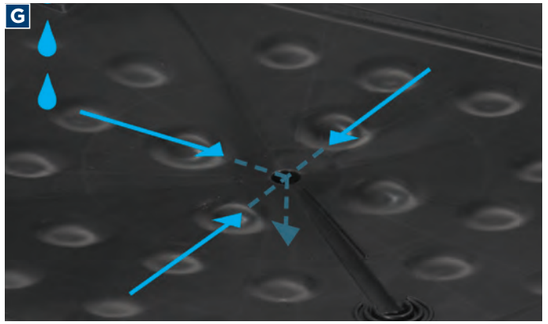

SELF-CONTAINED DRAINAGE SYSTEM*
Easy installation allows for simple chassis removal while leaving plumbing completely intact.

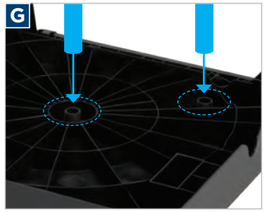

FAST-CONNECT PLUMBING*
Thoughtful design enables platform build and rough plumbing completed in only minutes.

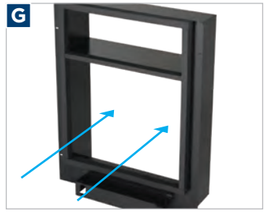

QUICK-INSTALL PLENUM
Plenum is easily installed from the interior of building, without the need for exterior building access.**

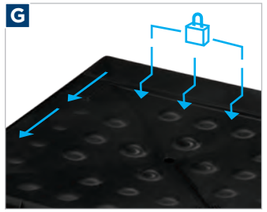

SELF-ALIGNING, LOCK-IN-PLACE SYSTEM
The locking ledge secures the chassis to the platform. Perfect fit, perfect seal, no fastening required.



ONBOARD DIAGNOSTICS
Electronic controls give clear and fast diagnostics data and fault codes, for quick and easy notifications.



REVERSE CYCLE DEFROST
Exclusive technology increases efficiency, enabling the unit to run in heat pump mode longer.



PREMIUM GUARD SEACOAST PROTECTION
Exclusive rustproof basepan and platform provide another level of corrosion protection to ensure lasting performance in challenging environments.



ULTRA-QUIET
Delivers quiet cooling power with a smooth sound for a good night's sleep



SmartHQ™ WIFI CAPABILITY
An optional WiFi module gives property managers the ability to oversee units, increasing productivity and enhancing guests' experience.

*RAVDPLAT, platform with drain must be ordered separately
**Caulking requires exterior access

ZONELINE® ULTIMATEV10™ VERTICAL AIR CONDITIONER



ZONELINE ULTIMATE V10 VERTICAL AIR CONDITIONER

- Excellent efficiency and dehumidification
- Permanently lubricated fan motors
- Standard size air filter (18" x 20" x 1") included
- Central desk control capability
- HI and LOW fan speeds controlled by remote thermostat
- Corrosion protection treatment standard
- Slinger ring condensate removal
- Indoor frost control
- Automatic compressor random restart
- Compressor restart delay
- Electronic control diagnostics/ Service Models
- Warranty (including both parts and labor)
- Boost Heat
- Freeze/Heat Sentinel
- Auxiliary Control Settings

AZ95E09DAC
AZ95E12DAC
AZ95E18DAC

9,200/11,500/17,200 BTU (Cool)
11.2/11.5/12.1 EER
230/208 Volts

AZ95H09DAC
AZ95H12DAC
AZ95H18DAC

8,900/11,300/17,200 BTU (Cool)
8,900/10,500/15,800 BTU (Heat)
11.1/11.8 EER
3.3/3.5 COP*
230/208 Volts

AZ95H09EAC
AZ95H12EAC
AZ95H18EAC

8,700/11,400/17,100 BTU (Cool)
8,000/10,500/15,900 BTU (Heat)
11.0 EER
3.3 COP*
265 Volts

ESSENTIAL PARTS & ACCESSORIES

ESSENTIAL ACCESSORIES

Zoneline Vertical Air Conditioners require a set of essential accessories for proper operation. Once you have selected the size of unit needed, next you'll need to consider the following:

POWER CONNECTIONS - All AZ95 Zoneline Vertical units must be direct connected.



RAK315D/320D/330D
(RAK320D shown)

230/208-VOLT UNIVERSAL DIRECT CONNECT POWER SUPPLY KIT



RAK515D/520D/530D
(RAK520D shown)

265-VOLT UNIVERSAL DIRECT CONNECT POWER SUPPLY KIT

The correct kit for the installation is determined by the voltage and breaker size of the electrical circuit.

There is no 15 amp breaker option available for the 18,000 BTUh models due to compliance with UL standard 60335-2-40.

Specifications subject to change.
Complete features and specifications on page 380.

*Coefficient of Performance

ESSENTIAL PARTS & ACCESSORIES

PLENUM ADAPTERS



RAVTRANS2

PLENUM ADAPTER
to transition from existing AZ75/ AZ85 wall plenum to AZ95 unit



RAVTRANS3

PLENUM ADAPTER
to transition from existing AZ90/AZ91 shallow plenum (RAVWPT8) to AZ95 unit



RAVTRANS4

PLENUM ADAPTER
to transition from existing AZ90/ AZ91 deep plenum (RAVWPT14) to AZ95 unit

TELESCOPING WALL PLENUM AND DRAIN PLATFORM



RAVWPT15

TELESCOPING PLENUM
for wall depth 8"-15"
Wall Cut out: 24" x 32"



RAVDPLAT

DRAIN PLATFORM

EXTERIOR GRILLE AND INTERIOR ACCESS PANELS



RAVAL3

ARCHITECTURAL ALUMINUM OUTDOOR GRILLE



RAVRG4

ACCESS PANEL WITH RETURN GRILLE
Cut out:
28-1/8" W x 55-7/8" H



RAVRG2

RETURN AIR GRILLE
Cut out:
20-3/8" W x 20-3/8" H

THERMOSTATS

ALL ZONELINE VERTICAL UNITS ARE COMPATIBLE WITH GE APPLIANCES' WALL-MOUNTED REMOTE THERMOSTATS.



RAK149P2

HEAT PUMP DIGITAL PROGRAMMABLE REMOTE THERMOSTAT



RAK149F2

HEAT PUMP DIGITAL TWO-FAN-SPEED THERMOSTAT



RAK180W1

ENERGY MANAGEMENT OCCUPANCY-SENSING WIRED/ WIRELESS THERMOSTAT

CLEANING SUPPLIES



WX10X10021

CERAMA BRYTE® GAS GRATE CLEANING KIT

- Formulated to deliver the extra cleaning needed to power through burnt-on deposits on gas grates and burner caps
- Kit includes:
  - 1 brass bristle cleaning brush
  - 4 cooktop cleaning pads
  - 16-oz. bottle of gas grate cleaner
- Not recommended for aluminum drip pans

Cerama Bryte is a registered trademark of Cerama Bryte, Inc.



WX10X10020

CERAMA BRYTE COMPLETE COOKTOP KIT

- Keeps your cooktop looking like new
- Cleans and provides a protective coating for glass-ceramic cooktops
- Kit includes:
  - 18-oz. bottle of cooktop cleaner
  - 16-oz. bottle of touchup spray
  - 2-oz. bottle of burnt-on grease remover
  - 5 cooktop cleaning pads
  - 1 microfiber cleaning cloth
  - 1 scraper



WX10X350

CERAMA BRYTE CLEANING PADS

- Non-woven fibers will not scratch surfaces
- Includes 4 pads (4" x 2-1/2")



WX10X307

CERAMA BRYTE MICROFIBER CLEANING CLOTHS

- Can be used with Cerama Bryte cooktop cleaner or stainless steel cleaner
- Also usable as a dusting cloth
- Package of 2 durable cloths



WX10X320

CERAMA BRYTE BURNT-ON GREASE REMOVER

- Eliminates grease and burnt-on food from glass-ceramic cooktops
- 2-oz. bottle



WX10X300

CERAMA BRYTE COOKTOP CLEANER

- Ideal for heavy, burnt-on residue
- Cleans and provides a protective coating for glass-ceramic cooktops
- Excellent for kitchen sinks and countertops
- Contains no phosphates
- 28-oz. bottle



PM10X304

CERAMA BRYTE COOKTOP SCRAPER

- Single-edge angled razor blade in a unique two-piece plastic handle
- Removes large, burnt-on areas
- Use before cleaning with pad and Cerama Bryte Cooktop Cleaner



PM10X311

CERAMA BRYTE STAINLESS STEEL CLEANER & POLISHER

- Specially formulated to clean, polish and protect stainless steel appliances
- Makes it easy to remove food stains, fingerprints and water spots
- Provides a protective layer to prevent future spots and stains
- Includes mineral oil to eliminate streaks and create a beautiful shine
- 16-oz. bottle
- **Not recommended for use on Black Stainless, Slate, or Black Slate finishes**



WX10X10004

CERAMA BRYTE STAINLESS STEEL WIPES

- Cleans, polishes and protects all stainless steel without streaking
- Removes grease spatter, fingerprints, dust and food
- 35 pre-moistened wipes in canister
- **Not recommended for use on Black Stainless, Slate, or Black Slate finishes**



WX10X10009

CITRUSHINE™ STAINLESS STEEL SPRAY

- Cleans and protects all stainless steel without streaking
- Removes grease spatter, fingerprints, dust and food
- 12-oz. bottle
- **Not recommended for use on Black Stainless, Slate, or Black Slate finishes**

Citrushine is a trademark of Bryson Industries, Inc.



WX10X392

CERAMA BRYTE APPLIANCE CLEANER

- Quickly cleans dried starches (like potatoes and noodles) and greases (like bacon)
- Extra-strength—4 times the strength of regular all-purpose cleaners
- Safe to use around food preparation surfaces
- **Great on painted appliance finishes such as Black Stainless, Slate and Black Slate**
- 16-oz. bottle



WX10X310

CERAMA BRYTE GRANITE AND QUARTZ CLEANER

- Cleans, polishes and helps protect sealed stone and solid-surface countertops
- Quick and easy removal of grease, watermarks and stains
- 16-oz. spray bottle



WX10X391

CERAMA BRYTE TOUCHUPS SPRAY

- Safe on ALL smoothtop cooktops—ideal for induction!
- Quickly and easily removes fingerprints, grease, water residue and smudges
- Easy-to-use trigger spray
- 16-oz. bottle
- For tough, dried-on residue, use Cerama Bryte Cooktop Cleaner, WX10X300



WX10X10206

CERAMA BRYTE REFRIGERATOR CLEANER

- Cleans grease and food spills on the interior of the refrigerator or microwave
- Great to use as a multi-surface kitchen cleaner
- Non-toxic and safe for everyday use
- 16-oz. bottle



WX10X10210

FINISH® JET-DRY® RINSE AID

- 16-oz. bottle handles 150 washes; use with detergent
- Works with detergent to rinse away stubborn leftover food, spots, and film for sparkling dishes, glasses and utensils
- Contains glass protection ingredient for shinier and drier dishes
- Is automatically released in the rinse cycle after being added to the rinse aid dispenser

Finish is a registered trademark of Reckitt Benckiser Group.



WX10X10209

FINISH DISHWASHER CLEANER

- 8.45-oz. bottle; recommended use: once a month
- Cleans, freshens, and helps maintain your dishwasher
- Hygienically cleans hidden grease and lime scale from filters, spray-arms, pipes and tubes
- Safe for septic systems and contains no phosphorus



WX10X10022

FINISH HARD WATER DETERGENT BOOSTER

- 14-oz. canister of booster crystals; lemon sparkle scent
- Can be added to pre-wash chamber or directly to bottom of dishwasher
- Supercharges detergent for crystal-clear dishes
- Booster removes
  - Spots, residue and hard-water film
  - Tough, bleachable stains such as tea
  - Mineral buildup in your machine
- Safe for septic systems and contains no phosphorus



WX10X311

CERAMA BRYTE DISPOSAL CLEANER

- Removes foul odors and keeps your disposer and drains smelling fresh with a just-cleaned scent
- Cleans away food, grease and odors from your disposer and the entire drain
- Most effective at removing the cause of odors by providing superior, long-lasting cleaning
- 16-oz. bottle



WX10X312

CERAMA BRYTE WASHER CLEANER

- Removes abrasives harmful to laundry
- Keeps machines working their best
- Safe for all models
- 16-oz. bottle, contains 4 uses

ORDER GE PARTS AND ACCESSORIES BY CALLING 800-851-6200 OR ONLINE AT GEAPPLIANCEPARTS.COM BY USING GE PARTS ACCOUNT NUMBER.

LIMITED WARRANTY INFORMATION

(See written warranty for complete details.)

The condensed list below is a convenient overview of the written warranties offered on various GE appliances described in this catalog for products manufactured on or after January 1, 2006. For complete warranty details on a specific GE Appliances model, contact your nearest GE Appliances supplier, or call GE Appliances Factory Service, toll-free, 800.GE.CARES (800-432-2737).

REFRIGERATORS, WINE AND BEVERAGE CENTERS, ICE MAKERS

For the period of	GE Appliances will replace
One year From the date of the original purchase	**Any part** in the refrigerator which fails due to a defect in materials or workmanship. During this **limited one-year warranty,** GE Appliances will provide, **free of charge,** all labor and related service costs to replace the defective part.
Five years From the date of the original purchase (GE Profile models ONLY)	**Any part of the sealed refrigerating system** (the compressor, condenser, evaporator and all connecting tubing) which fails due to a defect in materials or workmanship. During this **limited five-year sealed refrigerating system warranty,** GE Appliances will also provide, **free of charge,** all labor and related service costs to replace the defective part on GE Profile™ appliances only.

REFRIGERATORS, FREEZERS, WINE AND BEVERAGE CENTERS

For the period of	GE Appliances will replace
One year From the date of the original purchase	**Any part** in the refrigerator which fails due to a defect in materials or workmanship. During this **limited one-year warranty,** GE Appliances will provide, **free of charge,** all labor and related service costs to replace the defective part.

ICEMAKERS

For Refrigerators

For the period of	GE Appliances will replace
One year From the date of the original purchase	**Any part** in the icemaker which fails due to a defect in materials or workmanship. During this **limited one-year warranty,** GE Appliances will provide, **free of charge,** all labor and related service costs to replace the defective part.

WATER FILTERS

For the period of	GE Appliances will replace
30 days From the date of the original purchase	**Any part** of the water filter cartridge which fails due to a defect in materials or workmanship during this **limited thirty-day warranty*.**

RANGES, COOKTOPS, WALL OVENS, WARMING DRAWERS AND HOODS

For the period of	GE Appliances will replace
One year From the date of the original purchase	**Any part** in the cooking product which fails due to a defect in materials or workmanship. During this **limited one-year warranty** GE Appliances will provide, **free of charge,** all labor and related service costs to replace the defective part.

SPEEDCOOK FIVE-IN-ONE OVENS WITH ADVANTIUM® TECHNOLOGY

For the period of	GE Appliances will choose to replace or service
One year From the date of the original purchase	**Any part** of the oven which fails due to a defect in materials or workmanship. During this **limited one-year warranty**, GE Appliances will provide, **free of charge**, all labor and related services costs to replace the defective part.
Five years From the date of the original purchase	**The magnetron tube,** if the magnetron tube fails due to a defect in the materials or workmanship. During this **five-year limited warranty**, you will be responsible for any labor or in-home service costs.

OVER-THE RANGE AND COUNTERTOP MICROWAVES

For the period of	GE Appliances will choose to replace or service
One year From the date of the original purchase	**In the event of service, GE Appliances will provide any part** of the microwave which fails due to a defect in materials or workmanship. During this **limited one-year warranty,** GE Appliances will also provide, **free of charge,** all labor and related service costs to replace the defective part when the unit is serviced.

DISHWASHERS AND COMPACTORS

For the period of	GE Appliances will replace
One year From the date of the original purchase	**Any part** in the dishwasher or compactor which fails due to a defect in materials or workmanship. During this **limited one-year warranty,** GE Appliances will provide, **free of charge,** all labor and related service costs to replace the defective part.

DISPOSERS

For the period of	GE Appliances will replace
One year From the date of the original purchase	Models GFC320 and GFC325: The entire disposer if there is a defect in materials or workmanship relating to functional parts only (appearance parts are excluded). During this **limited one-year warranty,** GE Appliances will also provide, **free of charge,** all labor charges related to replacing the original disposer along with the replacement disposer within the first year.
Additional one year From the date of the original purchase	Models GFC520V, GFC525V: If there is a defect in materials or workmanship relating to functional parts only (appearance parts are excluded). During this **one-year extended limited warranty period,** you will be responsible for all installation charges related to the replacement disposer.
Additional two years From the date of the original purchase	Models GFC530V, GFC535V: If there is a defect in materials or workmanship relating to functional parts only (appearance parts are excluded). During this **two-year extended limited warranty period,** you will be responsible for all installation charges related to the replacement disposer.
Additional four years From the date of the original purchase	Models GFC720V, GFB760V: If there is a defect in materials or workmanship relating to functional parts only (appearance parts are excluded). During this **four-year extended limited warranty period,** you will be responsible for all installation charges related to the replacement disposer.
Additional six years From the date of the original purchase	Model GFC1020V: If there is a defect in materials or workmanship relating to functional parts only (appearance parts are excluded). During this **six-year extended limited warranty period,** you will be responsible for all installation charges related to the replacement disposer.
Three years From the date of the original purchase	Model GREEN05P: The entire disposer if there is a defect in materials or workmanship relating to functional parts only (appearance parts are excluded). During this **limited three-year warranty,** GE Appliances will also provide, **free of charge**, all labor charges related to replacing the original disposer along with the replacement disposer within the first year.

*If your GE Appliances part fails because of a manufacturing defect within thirty days from the date of original purchase for use, we will give you a new or, at our option, a rebuilt part without charge. Return the defective part to the parts supplier from whom it was purchased together with a copy of the "proof of purchase" for the part. If the part is defective and shows no signs of abuse, it will be exchanged. The warranty does not cover the failure of parts which are damaged while in your possession, are abused, or have been installed improperly. It does not cover the cost of returning the part to the supplier from whom it was purchased nor does it cover the cost of labor to remove or install it to diagnose the fault. It does not cover parts used in products in commercial use except in the case of air conditioning equipment. In no event shall GE Appliances be liable for consequential damages. Warrantor: GE Appliances

GE Appliances has a policy of continuous improvement of its products and reserves the right to change materials and specifications without notice.

ELECTRIC WATER HEATER

For the period of	GE Appliances will replace
One year From the date of the original purchase	**Any part** in the Water Heater which fails due to a defect in materials or workmanship. During this **limited one-year warranty,** GE Appliances will reimburse registered service providers, or will reimburse consumers for documented out of pocket costs for parts and/or labor for professional service at a predetermined rate as found on the GE Appliances Website GEAppliances.com/waterheater, unless service provided to replace defective parts is determined to be a result of improper installation or maintenance.
Second through Eighth, Tenth or Twelfth Year From the date of the original purchase	**Any part** of the Water Heater which fails due to a defect in materials or workmanship. During this **limited second through the end of the warranty period,** labor and related service to replace the defective part are not included. *Warranty is based on the 6th and 7th digit of model number located on rating plate (e.g.: GE50T08BAM has a part warranty of 8 years).

SOLAR WATER HEATER

For the period of	GE Appliances will replace
One year From the date of the original purchase	**Any part** in the Water Heater which fails due to a defect in materials or workmanship. During this **limited one-year warranty,** GE Appliances will reimburse registered service providers, or will reimburse consumers for documented out-of-pocket costs for parts and/or labor for professional service at a predetermined rate as found on the GE Appliances Website GEAppliances.com/waterheater, unless service provided to replace defective parts is determined to be a result of improper installation or maintenance.
Second through Fifth Year From the date of the original purchase	**Any part** in the Water Heater which fails due to a defect in materials or workmanship. During this **limited second through year five warranty period**, labor and related service to replace the defective part are not included.
Sixth through Tenth Year From the date of the original purchase	50% of the cost of **any part,** of the water heater which fails due to defect in materials or workmanship. During this **sixth through the end of the warranty period**, labor and related service to replace the defective part are not included. Warranty is based on the 6th and 7th digit of model number located on rating plate (e.g.: GE50T**10**BAM has a part warranty of 10 years).

WATER SOFTENERS

For the period of	GE Appliances will replace
One year From the date of the original purchase	**Any part** of the Water Softening System which fails due to a defect in materials or workmanship. During this **limited one-year warranty,** GE Appliances will provide, **free of charge,** all labor and related service costs to replace the defective part.
Second through third year From the date of the original purchase	**Electronic Monitor,** if the Electronic Monitor fails due to a defect in materials or workmanship. During this **additional two-year limited warranty,** you will be responsible for any labor and related service costs.
Second through tenth year From the date of the original purchase	**Cabinet (Brine Tank) and Resin Tank,** if either of these parts fail due to a defect in materials or workmanship. During this **additional nine-year limited warranty,** you will be responsible for any labor and related service costs.

WASHERS

For the period of	GE Appliances will replace
One year From the date of the original purchase	**Any part** in the washer which fails due to a defect in materials or workmanship. During this **limited one-year warranty,** GE Appliances will provide, **free of charge,** all labor and related service costs to replace the defective part.
Ten years From the date of the original purchase	Models GFW850, GTW840/845, GTW720/725, GTW680/685, GFW650, GFW550 and GFW510: **The motor,** if it should fail due to a defect in materials or workmanship. During this **additional nine-year limited warranty**, you will be responsible for any labor and related service costs.

DRYERS

For the period of	GE Appliances will replace
One year From the date of the original purchase	**Any part** in the dryer which fails due to a defect in materials or workmanship. During this **limited one-year warranty,** GE Appliances will provide, **free of charge,** all labor and related service costs to replace the defective part.

REVERSE OSMOSIS FILTRATION SYSTEMS

For the period of	GE Appliances will replace
One year From the date of the original purchase	**Any part** of the Reverse Osmosis Filtration System (excluding filters) which fails due to a defect in materials or workmanship. During this **limited one-year warranty,** GE Appliances will provide, **free of charge,** all labor and related service costs to replace the defective part.

DUAL-STAGE AND SINGLE-STAGE WATER FILTRATION AND WHOLE HOUSE FILTRATION

For the period of	GE Appliances will replace
One year From the date of the original purchase	**Any part** of the Water Filtration System (excluding filters) which fails due to a defect in materials or workmanship. During this **limited one-year warranty,** GE Appliances will provide, **free of charge,** all labor and related service costs to replace the defective part.

DUAL-STAGE AND SINGLE-STAGE WATER FILTRATION AND WHOLE HOUSE FILTRATION

All GE models starting with GX

For the period of	GE Appliances will replace
One year From the date of the original purchase	**Any part** of the Water Filtration System (excluding filters) which fails due to a defect in materials or workmanship. During this **limited one-year warranty,** you will be responsible for any labor and related service costs.

DUAL-STAGE AND SINGLE-STAGE WATER FILTRATION AND WHOLE HOUSE FILTRATION

GE models: UNFCTFBL, UCRING, UCWRENCH, HHRING & HHWRNCH

For the period of	GE Appliances will replace
30 days From the date of the original purchase	**Any part** of the water filtration accessory that fails due to a defect in materials or workmanship. During this l**imited 30-day warranty**, you will be responsible for any labor and related service costs.

AIR CONDITIONERS

Window

For the period of	GE Appliances will replace
One year From the date of the original purchase	Replacement, repair, or refund of the original retail price for any product which fails due to a defect in materials or workmanship. If the unit is exchanged, the replacement unit is warranted for the remainder of your product's original **one-year warranty** period. GE Appliances will, at its sole discretion, replace the product with a product of the same or comparable functionality and quality or refund the original retail price.

DEHUMIDIFIERS

For the period of	GE Appliances will replace
One year From the date of the original purchase	During this **limited one-year warranty,** GE Appliances will **replace the dehumidifier** if there is a defect in materials or workmanship.

(continued on next page)

LIMITED WARRANTY INFORMATION (continued)

(See written warranty for complete details.)

AIR CONDITIONERS
24" Through-the-Wall

For the period of	GE Appliances will replace
Two years From the date of the original purchase	**Any part** of the air conditioner which fails due to a defect in materials or workmanship. During this **limited one-year warranty,** GE Appliances will provide, **free of charge,** all labor and related service costs to replace the defective part.

AIR CONDITIONERS
Zoneline® and Vertical Zoneline

For the period of	GE Appliances will replace
One year From the date of the original purchase	**Any part** of the air conditioner which fails due to a defect in materials or workmanship. During this **limited one-year warranty,** GE Appliances will provide, **free of charge,** all labor and related service costs to replace the defective part.
Five years From the date of the original purchase	**Sealed Refrigerating System,** if any part of the Makeup Air Module or Sealed Refrigerating System (the compressor, condenser, evaporator, and all connecting tubing) should fail due to a defect in materials or workmanship. During this **limited five-year warranty,** GE Appliances will provide, **free of charge,** all labor and related service costs to replace the defective part.
Second through fifth year (Zoneline only) From the date of the original purchase	**Fan Motors, Switches, Thermostat, Heater, Heater Protectors, Compressor Overload, Solenoids, Circuit Boards, Auxiliary Controls, Thermistors, Frost Controls, Freeze Sentinel, ICR Pump, Capacitors, Varistors and Indoor Blower Bearing,** if any of these parts should fail due to a defect in materials or workmanship. During this **additional four-year limited warranty,** the customer will be responsible for any labor and related service costs.
Second through fifth year (vertical Zoneline only) From the date of the original purchase	**Fan Motors, Switches, Thermostat, Heater, Heater Protectors, Compressor Overload, Solenoids, Circuit Boards, Auxiliary Controls, Thermistors, Frost Controls, Freeze Sentinel,** if any of these parts should fail due to a defect in materials or workmanship. During this **additional four-year limited warranty,** the customer will be responsible for any labor and related service costs.

AIR CONDITIONERS
26" Built-In

For the period of	GE Appliances will replace
Two years From the date of the original purchase	**Any part** in the air conditioner which fails due to a defect in materials or workmanship. During this **limited two-year warranty,** GE Appliances will provide, **free of charge,** all labor and related service costs to replace the defective part.
Five years From the date of the original purchase	**Any part of** the Sealed Refrigerating System (compressor, condenser, evaporator, reversing valve and all connecting tubing) which fails due to a defect in materials or workmanship. During this **three-year additional warranty,** GE Appliances will provide, **free of charge,** all labor and related service costs to replace the defective part.

PORTABLE AIR CONDITIONER UNITS

For the period of	GE Appliances will replace
One year From the date of the original purchase	Replacement, repair or refund of the **original retail price** for any product which fails due to a **defect in materials or workmanship**. If the unit is exchanged, the replacement unit is **warranted for the remainder of your product's original one-year warranty** period. GE will, at its sole discretion, replace the product with a product of the same or comparable functionality and quality or refund the **original retail price**.

PARTS AND ACCESSORIES

For the period of	GE Appliances will replace
One year From the date of the original purchase	If your GE Appliances part fails because of a manufacturing defect within **one year from the date of original purchase**, we will provide a new or, at our option, rebuilt part without charge. Return the defective part to the vendor from whom it was purchased with a copy of the "proof of purchase." If the part is defective it will be exchanged. This warranty does not cover parts which are improperly installed, damaged, abused or used for other than the intended purpose. It does not include cost of returning the part to the vendor from which it was purchased, labor to remove, install or diagnose the failure, parts used in commercial applications, incidental or consequential damage caused by possible defects with the parts. Excludes water filters which offer 30-day warranty.

FOR EACH PRODUCT LISTED

What GE Appliances will not cover:

- **Service trips to your home to teach you how to use the product.**
- **Improper installation.**
- **Replacement of house fuses or resetting of circuit breakers.**
- **Failure of the product if it is abused, misused or used for anything other than the intended purpose or used commercially.**
- **Damage to product caused by accident, fire, floods or acts of God.**
- **Incidental or consequential damage caused by possible defects with this appliance.**

EXCLUSION OF IMPLIED WARRANTIES - Your sole and exclusive remedy is product repair as provided in this Limited Warranty. Any implied warranties, including the implied warranties of merchantability or fitness for a particular purpose, are limited to one year or the shortest period allowed by law.

This warranty is extended to the original purchaser and any succeeding owner for products purchased for home use within the USA. In Alaska, the One-Year Warranty excludes the cost of shipping, or service calls to your home. Some states do not allow the exclusion or limitation of incidental or consequential damages. This warranty gives you specific legal rights, and you may also have other rights which vary from state to state. To know what your legal rights are, consult your local or state consumer affairs office or your state's Attorney General.

ACCESSIBILITY REQUIREMENTS

REFRIGERATORS/FREEZERS

Uniform Federal Accessibility Standards (UFAS)

TOP-FREEZERS AND SIDE-BY-SIDES

Regulation #/ Description:

4.2.6* Side Reach—If the clear floor space allows parallel approach by a person in a wheelchair, the maximum high side reach allowed shall be 54" (1370mm) and the low side reach shall be no less than 9" (230mm) above the floor.

4.27.4 Operation—Controls and operating mechanisms shall be operable with one hand and shall not require tight grasping, pinching, or twisting of the wrist. The force required to activate controls shall be no greater than 5lbf (222N).

4.34.6.8* Refrigerators/Freezers—Refrigerator/freezers shall comply with 4.34.6.3. Provision shall be made for refrigerators which are: (1) Of the vertical side-by-side refrigerator/freezer type; OR (2) Of the over-and-under type and meet the following requirements: (a) Have at least 50 percent of the freezer space below 54" (1370mm) above the floor. (b) Have 100 percent of the refrigerator space and controls below 54" (1370mm).

Americans with Disabilities Act (ADA)/ANSI Standard Requirements

TOP-FREEZERS AND FRENCH-DOOR BOTTOM-FREEZERS WITH EXTERNAL DISPENSER CONTROLS

Regulation #/ Description:

804.6.6 Refrigerators/Freezers—Combination refrigerators and freezers shall have at least 50 percent of the freezer space 54 inches (1370 mm) maximum above the finish floor or ground. The clear floor or ground space shall be positioned for a parallel approach to the space dedicated to a refrigerator/freezer with the centerline of the clear floor or ground space offset 24 inches (610 mm) maximum from the centerline of the dedicated space.

308.3.1 Unobstructed—Where a clear floor or ground space allows a parallel approach to an element and the side reach is unobstructed, the high side reach shall be 48 inches (1220 mm) maximum and the low side reach shall be 15 inches (380 mm) minimum above the finish floor or ground.

308.3.2 Obstructed High Reach—Where a clear floor or ground space allows a parallel approach to an element and the high side reach is over an obstruction, the height of the obstruction shall be 34 inches (865 mm) maximum and the depth of the obstruction shall be 24 inches (610 mm) maximum. The high side reach shall be 48 inches (1220 mm) maximum for a reach depth of 10 inches (255 mm) maximum. Where the reach depth exceeds 10 inches (255 mm), the high side reach shall be 46 inches (1170 mm) maximum for a reach depth of 24 inches (610 mm) maximum.

309.3 Height—Operable parts shall be placed within one or more of the reach ranges specified in 308.3

309.4 Operation—Operable parts shall be operable with one hand and shall not require tight grasping, pinching, or twisting of the wrist. The force required to activate operable parts shall be 5 pounds (22.2 N) maximum.

The following appliance categories meet criteria for both the Uniform Federal Accessibility Standards (UFAS) and the Americans with Disabilities Act (ADA) requirements.

WALL OVENS

SINGLE SELF-CLEAN OVENS

Regulation #/ Description:

4.2.5—maximum high forward reach for controls and operating mechanisms is 48", minimum low forward reach is 15".

4.27.4—controls and operating mechanisms must be operable with one hand and shall not require tight grasping, pinching, or twisting of the wrist. The force required to activate controls shall be no more than 5lbf.

4.34.6.7—ovens shall have controls on front panels; they may be located on either side of the door.

SLIDE-IN/DROP-IN RANGES

ELECTRIC AND GAS

Regulation #/ Description:

4.2.5—maximum high forward reach for controls and operating mechanisms is 48", minimum low forward reach is 15".

4.27.4—controls and operating mechanisms must be operable with one hand and shall not require tight grasping, pinching, or twisting of the wrist. The force required to activate controls shall be no more than 5lbf.

4.34.6.6—if ovens or cooktops have knee spaces underneath then they shall be insulated or otherwise protected on the exposed surfaces to prevent burns, abrasions, or electrical shock. The location of controls for ranges and cooktops shall not require reaching across burners.

ELECTRIC COOKTOPS

FRONT CONTROL

Regulation #/ Description:

4.2.5—maximum high forward reach for controls and operating mechanisms is 48", minimum low forward reach is 15".

4.27.4—controls and operating mechanisms must be operable with one hand and shall not require tight grasping, pinching, or twisting of the wrist. The force required to activate controls shall be no more than 5lbf.

4.34.6.6—if ovens or cooktops have knee spaces underneath then they shall be insulated or otherwise protected on the exposed surfaces to prevent burns, abrasions, or electrical shock. The location of controls for ranges and cooktops shall not require reaching across burners.

GAS COOKTOPS

Regulation #/ Description:

4.2.5—maximum high forward reach for controls and operating mechanisms is 48", minimum low forward reach is 15".

4.27.4—controls and operating mechanisms must be operable with one hand and shall not require tight grasping, pinching, or twisting of the wrist. The force required to activate controls shall be no more than 5lbf.

4.34.6.6—if ovens or cooktops have knee spaces underneath then they shall be insulated or otherwise protected on the exposed surfaces to prevent burns, abrasions, or electrical shock. The location of controls for ranges and cooktops shall not require reaching across burners.

FREE-STANDING RANGES

ELECTRIC AND GAS

Regulation #/ Description:

4.2.5—maximum high forward reach for controls and operating mechanisms is 48", minimum low forward reach is 15".

4.27.4—controls and operating mechanisms must be operable with one hand and shall not require tight grasping, pinching, or twisting of the wrist. The force required to activate controls shall be no more than 5lbf.

4.34.6.6—if ovens or cooktops have knee spaces underneath then they shall be insulated or otherwise protected on the exposed surfaces to prevent burns, abrasions, or electrical shock. The location of controls for ranges and cooktops shall not require reaching across burners.

MICROWAVES

BUILT-IN CONFIGURATION

Regulation #/ Description:

4.2.5—maximum high forward reach for controls and operating mechanisms is 48", minimum low forward reach is 15".

4.27.4—controls and operating mechanisms must be operable with one hand and shall not require tight grasping, pinching, or twisting of the wrist. The force required to activate controls shall be no more than 5lbf.

DISHWASHERS

Regulation #/ Description:

4.2.5—maximum high forward reach for controls and operating mechanisms is 48", minimum low forward reach is 15".

4.27.4—controls and operating mechanisms must be operable with one hand and shall not require tight grasping, pinching, or twisting of the wrist. The force required to activate controls shall be no more than 5lbf.

4.34.6.9—all rack space shall be accessible from the front of the machine for loading and unloading dishes.

LAUNDRY

Regulation #/ Description:

4.2.5—maximum high forward reach for controls and operating mechanisms is 48", minimum low forward reach is 15".

4.27.4—controls and operating mechanisms must be operable with one hand and shall not require tight grasping, pinching, or twisting of the wrist. The force required to activate controls shall be no more than 5lbf.

4.34.7.2—washing machines and clothes dryers shall be front loading.

611.4* Height—Top loading machines shall have the door to the laundry compartment located 36 inches (915 mm) maximum above the finish floor. Front loading machines shall have the bottom of the opening to the laundry compartment located 15 inches (380 mm) minimum and 36 inches (915 mm) maximum above the finish floor.

ROOM AIR CONDITIONERS

Regulation #/ Description:

4.2.5—maximum high forward reach for controls and operating mechanisms is 48", minimum low forward reach is 15".

4.27.4—controls and operating mechanisms must be operable with one hand and shall not require tight grasping, pinching, or twisting of the wrist. The force required to activate controls shall be no more than 5lbf.

GE Appliances has a policy of continuous improvement of its products and reserves the right to change materials and specifications without notice.

COUNTER-DEPTH FRENCH-DOOR REFRIGERATORS

	GE PROFILE™				GE				
	PYE22PYN	PYD22KBL PYD22KYN	PYE22KBL PYE22KYN PYE22KMK PYE22KEL	PWE23KYN PWE23KMK PWE23KEL	GYE22GYN GYE22GMN GYE22GEN		GWE23GYN GWE23GMN GWE23GEN	GWE19JSL GWE19JML GWE19JGL	GYE18JBL GYE18JSL GYE18JML GYE18JEM
ENERGY STAR® certified	●		●	●	●		●	●	●
WiFi Connect	Built-in	Optional††	Optional††	Optional††	Optional		Optional	Optional††	Optional††
Sabbath mode capable	●	●	●	●	●		●	●	●
ADA compliant	●	●	●		●				●
CAPACITY									
Total (cu. ft.)	22.1	22.1	22.1	23.1	22.1		23.1	18.6	17.5
Fresh food (cu. ft.)	14.92	14.89	14.92	15.93	14.92		15.93	13.59	12.5
Freezer (cu. ft.)	7.16	7.18	7.16	7.16	7.16		7.16	5.01	5.01
FRESH-FOOD FEATURES									
Door in Door		●							
TwinChill™ evaporators	●	●	●	●	●		●		
External controls with temperature display and child lock	●	●	●						●
Door alarm	●	●	●	●	●		●	●	●
Turbo Cool setting	●	●	●		●			●	●
Cabinet shelves	5 glass	5 glass	5 glass	5 glass	6 glass		5 glass	5 glass	5 glass
Adjustable	4 split	4 split	4 split	4 split	5 split		4 split	4	4
Full-width	1	1	1	1	1		1	1	1
Spillproof	3	3	3	3	4		4		
Quick Space shelf	●	●	●	●				●	●
External dispenser	Ice & water	Ice & water	Ice & water		Ice & water				Ice & water
Keurig® K-Cup® brewing system	●								
Hot water	●								
Hands-free Autofill		●	●						
Internal water dispenser				●				●	
Advanced filtration system	RPWFE	RPWFE	RPWFE	RPWFE	RPWFE		RPWFE	XWFE	XWFE
Water filter indicator light	●	●	●	●	●		●	●	●
Humidity-controlled drawers	2	2	2	2			2	2	2
Full-width drawer	Electronic w/color LED lighting	Electronic w/color LED lighting	Electronic w/color LED lighting	Electronic w/color LED lighting			Electronic with LED lighting	●	●
Fresh-food door bins	6 (3 w/gallon storage, 2 adj.)	6 (1 rotating)	6 (3 w/gallon storage, 2 adj.)	6 (4 adj. with gallon storage)	6 (2 w/gallon storage, 2 adj.)		6 (4 adj. with gallon storage)	8 (6 adjustable, 2 fixed)	7 (3 adjustable, 4 fixed)
Drop-down tray	●		●	●					
Dairy compartment	●		●	●			●		
Showcase LED lighting	7 + colored full-width drawer	Full-width drawer	7 + colored full-width drawer	7 + colored full-width drawer			7 + full-width drawer	●	●
FREEZER FEATURES									
Space-saving icemaker	●	●	●		●				
Factory-installed icemaker & bin		Optional 2nd icemaker (IM5D)	Optional 2nd icemaker (IM5D)	●			●	●	
Turbo Freeze setting	●	●	●		●				
Frost Guard technology	●	●	●	●			●	●	●
Full-width, full-extension plastic freezer bins	2 + door bin	2 + door bin	2 + door bin	2 + door bin	2		2	2 full-width, full-extension plastic baskets	2 full-width, full-extension plastic baskets
Showcase LED lighting	2	2	2	2	2		2	●	●
EXTERIOR									
Color(s) available*	FS	TS/FS	TS/FS/ES/DS	FS/ES/DS	FS/ES/DS		FS/ES/DS	SS/ES/WW, BB	SS/ES/DS/TS
Handle color	Fingerprint Resistant Stainless	Black Stainless Fingerprint Resistant Stainless	Fingerprint Resistant Stainless Slate Black Slate Black Stainless	Fingerprint Resistant Stainless Stainless with chrome Black Stainless	Fingerprint Resistant Stainless Slate Black Slate		Fingerprint Resistant Stainless Slate Black Slate	Stainless Stainless Color-matched	Stainless with chrome Stainless with chrome Black Stainless Black Slate
Handle design	Designer-style	Designer-style	Designer-style	Designer-style	Designer-style		Designer-style	Designer-style	Designer-style
Door design	Contoured	Contoured	Contoured	Contoured	Contoured		Contoured	Contoured	Contoured
Textured steel case color	Case only (dark gray)	Case only (dark gray)	Case only (dark gray)	Case only (dark gray)	Case only (dark gray)		Case only (dark gray)	Case only (dark gray) Case only (dark gray) Case only (color-matched)	Case only (dark gray)
Door	Fingerprint Resistant Stainless	Black Stainless Fingerprint Resistant Stainless	Black Stainless Fingerprint Resistant Stainless Slate Black Slate	Fingerprint Resistant Stainless Slate Black Slate	Fingerprint Resistant Stainless Stainless Steel Appearance		Fingerprint Resistant Stainless Slate Black Slate	Stainless Steel Appearance	Black Stainless Stainless Slate Black Slate
Door stops	●	●	●	●	●		●	●	●
Adjustable rollers	2	2	2	2	2		2	2	2
WEIGHTS & DIMENSIONS									
Height to top of door (in.) A	70-1/2	70-1/2	70-1/2	70-1/2	70-1/2		70-1/2	69-7/8	69-7/8
Height to top of hinge (in.) B	69-7/8	69-7/8	69-7/8	69-7/8	69-7/8		69-7/8	69-3/4	69-3/4
Height to top of case (in.) C	69	69	69	69	69		69	68-5/8	68-5/8
Case depth without door (in.) D†	24-3/8	24-3/8	24-3/8	24-3/8	24-3/8		24-3/8	24-1/8	24-1/8
Case depth less door handle (in.) E†	29-3/4	29-3/4	29-3/4	28-3/4	29-3/4		28-3/4	29	29
Case depth with door handle (in.) F†	31-1/4	31-1/4	31-1/4	31-1/4	31-1/4		31-1/4	31	31
Depth w/fresh-food door open 90° (in.) G†	43-3/8	43-3/8	43-3/8	43-3/8	43-3/8		43-3/8	42	42
Width (in.) H	35-3/4	35-3/4	35-3/4	35-3/4	35-3/4		35-3/4	32-3/4	32-3/4
Width w/door open 90° w/door handle (in.) I	44-5/8	48-3/4	44-5/8	44-5/8	44-5/8		44-5/8	40-1/2	40-1/2
Each side (in.)	1/8	0-1/8	1/8	1/8	1/8		1/8	1/8	1/8
Top (in.)	1	1	1	1	1		1	1	1
Air clearances Back (in.)	2	2	2	2	2		2	2	2
Approximate shipping wt. (lbs.)	363	383	363	363	390		375	252	274
Power/Rating	120V, 60Hz, 15Amps	120V, 60Hz, 15Amps	120V, 60Hz, 15Amps	120V, 60Hz, 15Amps	120V, 60Hz, 15Amps		120V, 60Hz, 15Amps	120V, 60Hz, 15Amps	120V, 60Hz, 15Amps

*Color(s) available: SS = Stainless, FS = Fingerprint Resistant Stainless, TS = Black Stainless, ES = Slate, DS = Black Slate, WW = White, B = Black.
**Includes hot water knob.
†Water hookup fits in back air clearance when calculating installation depth.
††SmartHQ™ Connect Module is required and sold separately. It is available for order on geappliances.com, part number PBX23W00Y0.
ALL MODELS AVAILABLE IN U.S. AND CANADA.

FRENCH-DOOR REFRIGERATORS DIMENSIONS

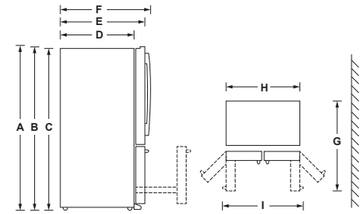

SIDE VIEW TOP VIEW

IMPORTANT: Before finalizing specifications for your counter-depth refrigerator, please NOTE:
- A minimum width of 36" is required for refrigerator installation
- Be sure to allow for 1/2" or 3/4" side panels in addition to the 36" minimum

Listed by Underwriters Laboratories

SEE PAGE 283 FOR INSTALLATION INFORMATION.

Above illustrations intended for dimensional reference only.
Refer to photography for actual product appearance.

FRENCH-DOOR REFRIGERATORS

	GE PROFILE™				GE		
	PVD28BYN	PFE28PYN	PFD28KBL PFD28KYN	PFE28KYN	GFD28GYN GFD28GML GFD28GEL	GFE28GYN GFE28GMK GFE28GEL	GNE29GYN GNE29GMN GNE29GEN
ENERGY STAR® certified	●	●		●		●	●
WiFi Connect	●	●	Optional††	Optional††	Optional††	Optional††	Optional††
Sabbath mode capable	●	●	●	●	●	●	●
ADA compliant		●	●	●	●	●	
CAPACITY							
Total (cu. ft.)	27.9	27.7	27.7	27.7	27.7	27.7	28.7
Fresh food (cu. ft.)	19.33	18.50	18.50	18.50	18.48	18.48	19.57
Freezer (cu. ft.)	8.57	9.17	9.17	9.17	9.17	9.17	9.17
FRESH-FOOD FEATURES							
Door in Door	●		●		●		
TwinChill™ evaporators	●	●	●	●	●	●	●
External controls with temperature display and child lock		●	●	●	●	●	
Door alarm	●	●	●	●	●	●	●
Turbo Cool setting	●	●	●	●	●	●	
Cabinet shelves	4 glass	5 glass	5 glass	5 glass	5 glass	5 glass	5 glass
Adjustable	2	4 split	4 split	4 split	4 split	4 split	4 split
Full-width	1	1	1	1	1	1	1
Spillproof		3	3	3	3	4	4
Quick Space shelf	1	●	●	●	●		
External dispenser	Ice & water	Ice & water	Ice & water	Ice & water	Ice & water	Ice & water	
Keurig® K-Cup® brewing system		●					
Hot water		●					
Hands-free Autofill			●	●			
Precise Fill							●
Adjustable-humidity drawers	2	2	2	2	2	2	2
Full-width drawer		Electronic with color LED lighting	Electronic with color LED lighting	Electronic with color LED lighting	●	●	Electronic with LED lighting
Fresh-food door bins	6 (3 with gallon storage, 2 adj.)	6 (3 with gallon storage, 2 adj.)	6 (1 rotating)	6 (3 with gallon storage, 2 adj.)	6 (1 rotating)	6 (3 with gallon storage, 2 adj.)	6 (4 adj. with gallon storage)
Drop-down tray		●		●			
Dairy compartment	●	●		●			●
Showcase LED lighting		7 + colored full-width drawer	7 + colored full-width drawer	7 + colored full-width drawer	5	5	7 + full-width drawer
FREEZER FEATURES							
Space-saving icemaker	●	●	●	●	●	●	
Factory-installed icemaker & bin			Optional 2nd icemaker (IM5D)	Optional 2nd icemaker (IM5D)	Optional 2nd icemaker (IM5D)	Optional 2nd icemaker (IM5D)	●
Turbo Freeze setting	●	●	●	●	●	●	
Frost Guard technology	●	●	●	●	●	●	●
Full-width, full-extension plastic freezer bins	2	2 + door bin	2 + door bin	2 + door bin			2
Showcase LED lighting	●	2	2	2	2	2	2
EXTERIOR							
Color(s) available*	FS	FS	TS / FS	FS	FS / ES / DS	FS / ES / DS	FS / ES / DS
Handle color	Stainless w/Chrome	Fingerprint Resistant Stainless	Black Stainless Fingerprint Resistant Stainless	Fingerprint Resistant Stainless	Fingerprint Resistant Stainless Black Stainless	Fingerprint Resistant Stainless Stainless with chrome Black Stainless	Fingerprint Resistant Stainless Slate Black Slate
Handle design	Designer-style	Designer-style	Designer-style	Designer-style	Designer-style	Designer-style	Designer-style
Door design	Contoured	Contoured	Contoured	Contoured	Contoured	Contoured	Contoured
Textured steel case color	Case only (dark gray	Case only (dark gray)	Case only (dark gray)	Case only (dark gray)	Case only (dark gray)	Case only (dark gray)	Case only (dark gray)
Door stops	●	●	●	●	●	●	●
Adjustable rollers	2	2	2	2	2	2	2
WEIGHTS & DIMENSIONS							
Height to top of door (in.) A	69-7/8	70-1/2	70-1/2	70-1/2	70-1/2	70-1/2	70-1/2
Height to top of hinge (in.) B	69-3/4	69-7/8	69-7/8	69-7/8	69-7/8	69-7/8	69-7/8
Height to top of case (in.) C	68-5/8	69	69	69	69	69	69
Case depth without door (in.) D†	29	29-3/8	29-3/8	29-3/8	29-3/8	29-3/8	29-3/8
Case depth less door handle (in.) E†	34-1/4	34-3/4	34-3/4	34-3/4	34-3/4	34-3/4	34-3/4
Case depth with door handle (in.) F†	36-3/4	36-1/4	36-1/4	36-1/4	36-1/4	36-1/4	36-1/4
Depth w/fresh-food door open 90° (in.) G†	48-3/8	35-5/8	48-3/8	48-3/8	48-3/8	48-3/8	48-3/8
Width (in.) H	35-5/8	35-3/4	35-3/4	35-3/4	35-3/4	35-3/4	35-3/4
Width w/door open 90° with door handle (in.) I	44-7/8	48-3/4	44-5/8	44-5/8	44-5/8	44-5/8	44-5/8
Air clearances Each side (in.)	1/8	1/8	1/8	1/8	1/8	1/8	1/8
Top (in.)	1	1	1	1	1	1	1
Back (in.)	2	2	2	2	2	2	2
Approximate shipping wt. (lbs.)	410	390	410	390	403	390	375
Power/Rating	120V, 60Hz, 15Amps	120V, 60Hz, 15Amps	120V, 60Hz, 15Amps	120V, 60Hz, 15Amps	120V, 60Hz, 15Amps	120V, 60Hz, 15Amps	120V, 60Hz, 15Amps

*Color(s) available: FS = Fingerprint Resistant Stainless, TS = Black Stainless, ES = Slate, DS = Black Slate.
**Includes hot water knob.
†Water hookup fits in back air clearance when calculating installation depth.
††SmartHQ™ Connect Module is required and sold separately. It is available for order on geappliances.com, part number PBX23W00Y0.
ALL MODELS AVAILABLE IN U.S. AND CANADA.

FRENCH-DOOR REFRIGERATORS DIMENSIONS

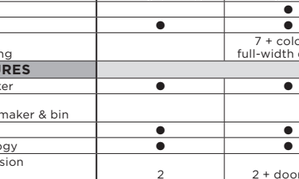

SIDE VIEW TOP VIEW

Listed by Underwriters Laboratories

SEE PAGE 283 FOR INSTALLATION INFORMATION.

Above illustrations intended for dimensional reference only.
Refer to photography for actual product appearance.

See page 274 for warranty information.

	GE					
	GFE26JGM GFE26JBM GFE26JYM GFE26JMM GFE26JEM	GNE27JYM GNE27JMM GNE27JGM	GNE27EYM	GFE24JBL GFE24JSK GFE24JMK GFE24JGK	GNE25JSK GNE25JMK GNE25JGK	GNE21FSK GNE21FMK
ENERGY STAR certified	●	●	●	●	●	●
Sabbath mode capable	●	●	●	●	●	●
WiFi Connect	Optional†	Optional†	Optional†	Optional†	Optional†	Optional†
ADA compliant	●			●		
CAPACITY						
Total (cu. ft.)	25.6	27	27	23.7	24.7	20.8
Fresh food (cu. ft.)	17.45	18.81	18.81	16.46	17.44	14.76
Freezer (cu. ft.)	8.18	8.18	8.18	7.28	7.28	6.04
FRESH-FOOD FEATURES						
External controls with child lock	●			●		
Door alarm	●	●	●	●	●	●
Upfront temperature controls		●	●		●	●
Turbo Cool setting	●	●	●	●	●	●
Spillproof cabinet shelves	5 glass	5 glass	4 glass	5 glass	5 glass	3 glass
Adjustable	4 split	4 split	4 split	4	4	2
Full-width	1	1	1	1	1	3
Quick Space shelf	●	●		●	●	
External dispenser	Ice & water			Ice & water		
Internal water dispenser		●			●	
In-the-door ice system	●			●		
Advanced filtration system	XWFE	XWFE	XWFE	XWFE	XWFE	XWFE
Water filter indicator light				●	●	●
Multi-level drawers				●	●	●
Full-width drawer	●	●		●	●	●
Humidity-controlled drawers	2	2	2	2	2	2
Fresh-food door bins	7 (3 adjustable with gallon storage)	8 (6 adjustable with gallon storage)	6 adjustable	7 (3 adjustable, 4 fixed)	8 (6 adjustable, 2 fixed)	8 (6 adjustable, 2 fixed)
LED lighting	●	●	●	●	●	●
FREEZER FEATURES						
Factory-installed icemaker		●	●		●	●
Frost Guard technology	●	●	●	●	●	●
Freezer storage basket(s)	2 full-width, full-extension plastic	2 full-width, full-extension with ice bin	2 full-width, full-extension with ice bin	2 full-width, full-extension plastic	2 full-width, full-extension with ice bin	2 full-width, full-extension with ice bin
LED lighting	●	●	●	●	●	●
EXTERIOR						
Color(s) available*	TS SS ES DS WW, BB	SS ES WW, BB	SS	TS SS ES WW, BB	SS ES WW, BB	SS ES
Handle color	Black Stainless Stainless Stainless Black Stainless White, Black	Stainless Stainless Color-matched	Stainless	Black Stainless Stainless Stainless Color-matched	Stainless Stainless Color-matched	Stainless Slate
Handle design	Designer-style	Designer-style	Designer-style	Designer-style	Designer-style	Designer-style
Field-installed handles	●	●	●	●	●	●
Door design	Contoured	Contoured	Contoured	Contoured	Contoured	Contoured
Textured steel case	White, Black Case only (dk. gray)	Case only (dk. gray)	Case only (dk. gray) Case only (dk. gray) Case only (color-matched)	Case only (dk. gray) Case only (dk. gray) Case only (color-matched)	Case only (dk. gray) Case only (dk. gray) Case only (color-matched)	Case only (dk. gray)
Door	Black Stainless Stainless Slate Black Slate White, Black	Stainless Slate High-gloss	Stainless	Black Stainless Stainless Slate High-gloss	Stainless Slate High-gloss	Stainless Slate
Door stops	●	●	●	●	●	●
Adjustable leveling legs	Front	Front	Front	Front	Front	Front
WEIGHTS & DIMENSIONS						
Height to top of door (in.) A	69-7/8	69-7/8	69-7/8	69-7/8	68-7/8	69-7/8
Height to top of hinge (in.) B	69-3/4	69-3/4	69-3/4	69-3/4	69-3/4	69-3/4
Height to top of case (in.) C	68-5/8	68-5/8	68-5/8	68-5/8	68-5/8	68-5/8
Case depth without door (in.) D†	29-1/2	29-1/2	29-1/2	30-5/8	30-5/8	29-3/4
Case depth less door handle (in.) E†	33-7/8	33-7/8	33-7/8	35	35	34-1/8
Case depth with door handle (in.) F†	36-3/8	36-3/8	36-3/8	37-1/2	37-1/2	36-5/8
Depth with fresh-food door open 90°(in.) G†	48-3/4	48-3/4	48-3/4	47-3/4	47-3/4	46-1/8
Width (in.) H	35-5/8	35-5/8	35-5/8	32-3/4	33	29-3/4
Width w/door open 90° with door handle (in.) I	43-3/4	43-3/4	43-3/4	40-7/8	40-7/8	37-7/8
Each side (in.)	1/8	1/8	1/8	1/8	1/8	1/8
Top (in.)	1	1	1	1	1	1
Air clearances Back (in.)	2	2	2	2	2	2
Approximate shipping wt. (lbs.)	303	332	332	302	275	232
Power/Rating	120V, 60Hz, 15Amps	120V, 60Hz, 15Amps	120V, 60Hz, 15Amps	120V, 60Hz, 15Amps	120V, 60Hz, 15Amps	120V, 60Hz, 15Amps

*Color(s) available: SS = Stainless, TS = Black Stainless, ES = Slate, DS = Black Slate, WW = White, BB = Black.
†SmartHQ Connect Module is required and sold separately. It is available for order on geappliances.com, part number PBX23W00Y0.

FRENCH-DOOR REFRIGERATORS DIMENSIONS

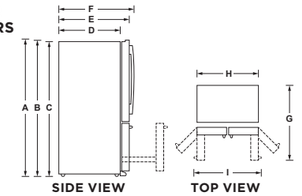

SIDE VIEW TOP VIEW

Listed by Underwriters Laboratories

SEE PAGE 283 FOR INSTALLATION INFORMATION.

Above illustrations intended for dimensional reference only.
Refer to photography for actual product appearance.

See page 274 for warranty information.

BOTTOM-FREEZER REFRIGERATORS

	GE			
	GDE25ESK	**GDE21ESK GDE21EMK GDE21EGK**	**GBE21DSK GBE21DGK**	**GLE12HSP**
ENERGY STAR® certified	●	●	●	●
Sabbath mode capable	●	●		●
WiFi Connect	Optional†	Optional†	Optional†	
CAPACITY				
Total (cu. ft.)	24.8	21.0	21.0	11.9
Fresh food (cu. ft.)	17.55	14.93	14.92	7.71
Freezer (cu. ft.)	7.28	6.04	6.04	4.19
FRESH-FOOD FEATURES				
External controls with child lock				●
Door alarm	●	●		
Upfront temperature controls	●	●		Internal
Turbo Cool setting	●	●		
Cabinet shelves	3 glass	3 glass	3 glass	3 glass
Adjustable				1
Full-width	3 (2 adjustable)	3 (2 adjustable)	3 (2 adjustable)	3
GE water filtration	XWFE	XWFE		
Water filter indicator light	●	●		
Full-width drawer				●
Crisper drawers	2 humidity-controlled	2 humidity-controlled	2 humidity-controlled	1 TempSelect Zone
Sliding snack drawer	Clear	Clear		
Clear Look door bins	4 clear (2 adj., 2 full-width fixed)	4 clear (2 adj., 2 full-width fixed)	4 clear (2 adj., 2 full-width fixed)	3 full-width
LED lighting	●	●	●	●
Bottle storage rack				●
FREEZER FEATURES				
Factory-installed icemaker	●	●	Opt. (IM4D)	Opt. (IM4D)
Frost Guard technology	●	●	●	●
Freezer storage basket(s)	2 full-width, full-extension with ice bin	2 full-width, full-extension with ice bin	1 full-width	2 drawers
Wire compartment shelves			1 full-width	2-level system; drawer divider & pan
LED lighting	●	●	●	●
EXTERIOR				
Color(s) available*	SS	SS ES WW/BB	SS WW/BB	SS
Counter-depth configuration				●
Handle color	Stainless	Stainless Stainless Color-matched	Stainless Color-matched	Stainless
Handle design	Designer-style	Designer-style	Designer-style	Recessed
Field-installed handles	●	●	●	
Door design	Contoured	Contoured	Contoured	Contoured
Textured steel case	Case only (dk. gray)	Case only (dk. gray) Case only (dk. gray) Case only (color-matched)	Case only (dk. gray) Case only (color-matched)	Dark gray
Door	Stainless	Stainless Slate High-gloss	Stainless High-gloss	Stainless
Door stops	●	●	●	●
Reversible doors	●	●	●	●
Right or Left door opening	●	●	● / ●	●
Adjustable leveling legs	Front	Front	Front	●
WEIGHTS & DIMENSIONS				
Height to top of door (in.) A	69-7/8	69-7/8	69-7/8	70
Height to top of hinge (in.) B	69-3/4	69-3/4	69-3/4	70
Height to top of case (in.) C	68-5/8	68-5/8	68-5/8	69-7/8
Case depth without door (in.) D†	30-5/8	29-3/4	29-3/4	23-1/2
Case depth less door handle (in.) E†	35	34-1/8	34-1/8	26-1/2
Case depth with door handle (in.) F†	37-1/2	36-5/8	36-5/8	26-1/2
Depth with fresh-food door open 90° (in.) G†	65-1/8	61-1/4	61-1/4	47-3/8
Width (in.) H	32-3/4	29-3/4	29-3/4	23-1/2
Width w/door open 90° with door handle (in.) I	36-7/8	33-7/8	33-7/8	24-7/8
Each side (in.)	1/8	1/8	1/8	1/8
Top (in.)	1	1	1	1
Air clearances Back (in.)	2	2	2	1
Approximate shipping wt. (lbs.)	275	232	232	192
Power/Rating	120V, 60Hz, 15Amps	120V, 60Hz, 15Amps	120V, 60Hz, 15Amps	120V, 60Hz, 15Amps

*Color(s) available: SS = Stainless, ES = Slate, WW = White, BB = Black.
†SmartHQ™ Connect Module is required and sold separately. It is available for order on geappliances.com, part number PBX23W00Y0.

BOTTOM-FREEZER REFRIGERATORS DIMENSIONS

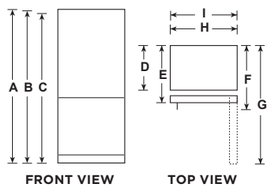

Listed by Underwriters Laboratories

SEE PAGE 283 FOR INSTALLATION INFORMATION.

Above illustrations intended for dimensional reference only.
Refer to photography for actual product appearance.

BOTTOM-FREEZER INSTALLATION INFORMATION & SPECIFICATIONS

ROUGH-IN DIMENSIONS

STANDARD, NEW CONSTRUCTION AND REPLACEMENT INSTALLATION

Installation tips to maximize the built-in look

- All wall/floor molding should be removed prior to installation.
- Water recess on rear wall recommended to prevent water line damage. 48" minimum length, 1/4"-diameter water line tubing recommended.
- When possible, recess both copper/pex water line and electrical outlet (see local codes).
- Front and rear leveling legs are adjustable for the built-in look (see owner's manual).

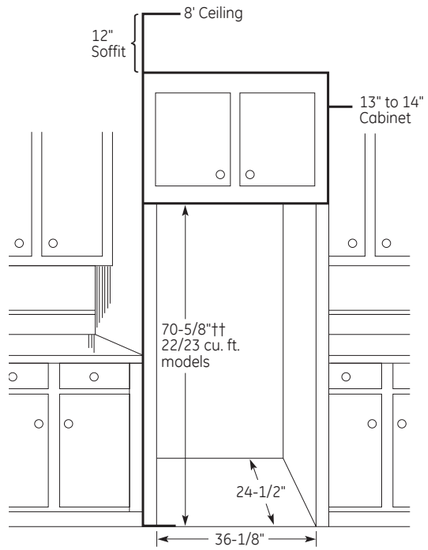

††The rough-in dimension of 70-5/8" is measured from the finished floor to top of opening (or the underside of overhead cabinets).

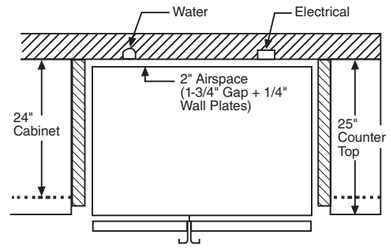

INSTALLATION OF WATER OUTLETS

FOR ALL FRENCH-DOOR, BOTTOM-FREEZER & SIDE-BY-SIDE MODELS

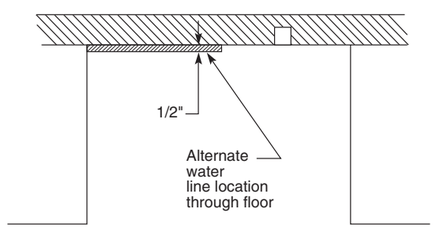

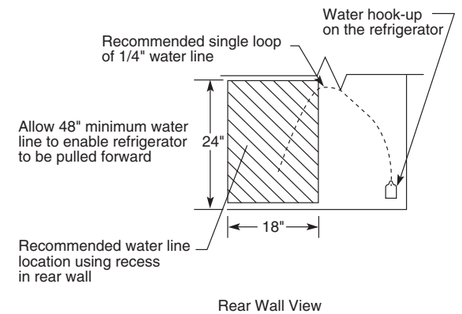

Above illustrations intended for dimensional reference only.
Refer to photography for actual product appearance.

BUILT-IN SIDE-BY-SIDE REFRIGERATORS

	GE PROFILE™
	PSB48YSN PSB42YSN
Stainless model	●
WiFi Connect	●
UFAS compliant	●
CAPACITY	
Total (cu. ft.)	28.7/24.5
Fresh food (cu. ft.)	17.23/15.82
Freezer (cu. ft.)	11.44/8.65
FRESH-FOOD FEATURES	
Multi-flow air system	●
Digital temperature display	●
Electronic sensors	●
Dispenser	●
Light	●
Door alarm	●
Turbo Cool setting	● (in app)
GE water filtration system	MWF
Water filter indicator light	●
Cabinet shelves	4 (3 adjustable)
Adjustable	3
Spillproof	4
Top drawer	Snack
Middle drawer	Sealed
Bottom drawer	Select Temp
Clear Look door bins	5
LED lighting	●
Never Clean condenser	●
FREEZER FEATURES	
Turbo Freeze setting	● (in app)
Factory-installed icemaker & bin	●
Drawer/Basket	2
Wire cabinet shelves	4 adj.
Door bins	3
LED lighting	●
EXTERIOR	
Color(s) available*	SS
Handle color	Stainless
Door hinge	Hidden
Adjustable rollers	2
WEIGHTS & DIMENSIONS	
Height to top of hinge (in.) A	84
Height to top of case (in.) B	83-1/2
Case depth without door (in.) C	23-7/8
Case depth less door handle (in.) D	25-3/4
Case depth with door handle (in.) E	28-3/8
Depth with fresh-food door open 90° (in.) F	52-1/2 50-1/2
Width (in.) G	48 42
Width with door open 90° incl. door handle (in.) H	53-7/8 48-1/4
Approx. shipping wt. (lbs.)	775/725
Power/Rating	115V, 60Hz, 20Amps

*Color(s) available: SS = Stainless.
If installed against a wall, allow clearance of 4" on freezer side to remove bin. Clearance required to remove fresh-food full-size pan without disassembling is 4".
ALL MODELS AVAILABLE IN U.S. AND CANADA.

INSTALLATION SPACE

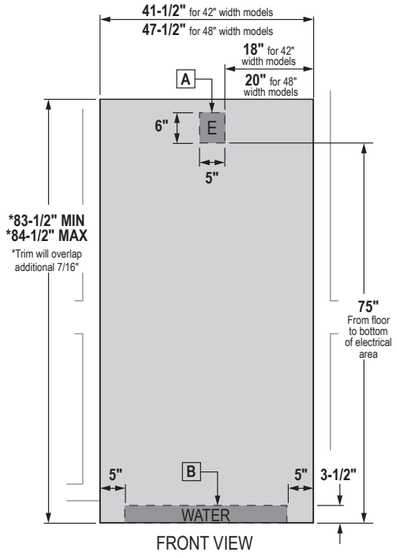

FRONT VIEW

A - Mounting the junction box in this location will also allow for front accessibility through access panel.

B - Water supply area.

WARNING! The refrigerator is top-heavy and must be secured to prevent the possibility of tipping forward. Failure to do so may result in serious injury or death.

The information provided is for cabinet design only. When installing the anti-tip system, you must use the product installation instructions.

See installation instructions for detailed instructions.

BUILT-IN SIDE-BY-SIDE REFRIGERATORS DIMENSIONS

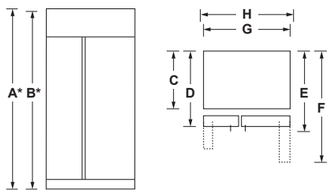

FRONT VIEW TOP VIEW

*Shipping height. Use leveling legs and wheels for maximum 1" height adjustments from shipping height.

SEE PAGE 283 FOR WATER OUTLET INSTALLATION.

Above illustrations intended for dimensional reference only.
Refer to photography for actual product appearance.

See page 274 for warranty information.

COUNTER-DEPTH SIDE-BY-SIDE REFRIGERATORS

	GE PROFILE	GE	
	PZS22MYK	GZS22DSJ GZS22DMJ GZS22DGJ	GZS22IYN GZS22IMN GZS22IEN
UFAS compliant	●	●	●
CAPACITY			
Total (cu. ft.)	21.9	21.9	21.8
Fresh food (cu. ft.)	14.24	14.07	14.23
Freezer (cu. ft.)	7.70	7.79	7.56
FRESH-FOOD FEATURES			
Multi-flow air system	●	●	
Electronic sensors	●	●	●
Actual-temperature display	●	●	●
External controls	●	●	●
Turbo Cool setting	●		
GE water filtration system	XWFE	XWFE	XWFE
Dispenser	Crushed ice, cubes, water	Crushed ice, cubes, water	Crushed ice, cubes, water
Light	LED	LED	LED
Child lock and door alarm	●	●	●
Quick Ice feature	●		
Water filter indicator light	●	●	●
Cabinet shelves	4 glass	4 glass	4 glass
Adjustable	3	3	3
Slide-out, spillproof	2 (3 spillproof)	3 (4 spillproof)	
Crisper cover (fixed)	1	●	
Quick Space shelf	●		
Integrated shelf-support system	●	●	●
Snugger clip(s)	2		
Drawer system	3-stack	2-stack	3-stack
Top drawer	Snack	Adj.-humidity	Snack
Middle drawer	Adj.-humidity		Adj.-humidity
Bottom drawer	Sealed	Sealed	Sealed
Clear Look door bins	4 (3 adj.)	4 (2 adj.)	4 (3 adj.)
Door shelves			5 total, fixed
LED lighting	●	●	●
Dairy compartment	●	●	●
Never Clean condenser	●	●	●
FREEZER FEATURES			
Frost Guard technology	●	●	●
Icemaker	Integrated	●	Factory-installed
Drawer/Basket	2 drawers	1 wire basket	2
Cabinet shelves	3 glass	2 glass, 1 wire	3 glass
Wire tilt-out door bin(s)	3 adj.		
Door bin	1 fixed	5 fixed	5 fixed
Interior lighting	●	●	●
EXTERIOR			
Color(s) available*	FS	SS/ES WW, BB	FS/ES/DS
Handle color	Stainless with chrome	Stainless with chrome Stainless with chrome Color-matched	Color-matched
Handle design	Designer-style	Designer-style	Designer-style
Door design	Contoured	Flat front with rounded sides Flat front with rounded sides High-gloss flat front with rounded sides	Contoured
Textured steel door and case	Case only (dark gray)	Case only (dark gray) Case only (dark gray) Case only (color-matched)	Case only (dark gray) Color-matched (color models)
Adjustable rollers	Front	Front	2-point adjustable
WEIGHTS & DIMENSIONS			
Height to top of hinge (in.) A	69-7/8	69-1/4	70-1/8
Height to top of case (in.) B	69	68-3/4	69
Case depth without door (in.) C	24-1/8	24-1/8	24-1/4
Case depth less door handle (in.) D	28-1/2	27	28-3/4
Case depth with door handle (in.) E	30-3/4	29-1/2	30-3/4
Depth with fresh-food door open 90° (in.) F	46-1/4	46	46-1/2
Width (in.) G	35-3/4	35-3/4	36
Width with door open 90° with door handle (in.) H	43-1/8	41-3/8	42-1/4
Air clearances Each side (in.)	1/8	1/8	1/8
Air clearances Top (in.)	1	1	1
Air clearances Back (in.)	2	2	2
Approx. shipping wt. (lbs.)	360	360	340
Power/Rating	120V, 60Hz, 15Amps	120V, 60Hz, 15Amps	120V, 60Hz, 15Amps

*Color(s) available: SS = Stainless, FS = Fingerprint Resistant Stainless, ES = Slate, DS = Black Slate, WW = White, BB = Black.
If installed against a wall, allow clearance of 14" on freezer side to remove bin.
Clearance required to remove fresh-food full-size pan without disassembling is 18-5/8".
ALL MODELS AVAILABLE IN U.S. AND CANADA.

COUNTER-DEPTH SIDE-BY-SIDE REFRIGERATORS DIMENSIONS

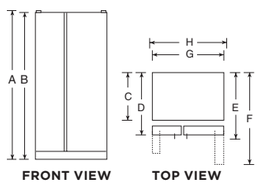

FRONT VIEW TOP VIEW

Listed by Underwriters Laboratories

Above illustrations intended for dimensional reference only.
Refer to photography for actual product appearance.

ROUGH-IN DIMENSIONS

STANDARD, NEW CONSTRUCTION AND REPLACEMENT INSTALLATION

Installation tips to maximize the built-in look

- All wall/floor molding should be removed prior to installation.
- Water recess on rear wall recommended to prevent water line damage. 48" minimum length, 1/4"-diameter water line tubing recommended.
- When possible, recess both copper water line and electrical outlet (see local codes).
- Front and rear leveling legs are adjustable for the built-in look (see owner's manual).

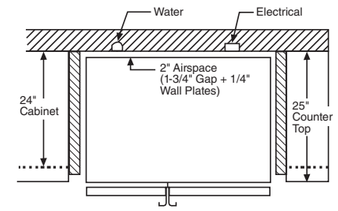

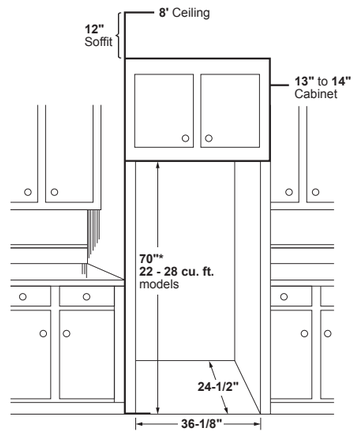

*The rough-in dimension of 70" for 22–28 cu. ft. models is minimum and measured from the finished floor to top of opening (or the underside of the overhead cabinets).

IMPORTANT: Before finalizing specifications for your counter-depth refrigerator, please NOTE: A minimum width of 36" is required for refrigerator installation.

SEE PAGE 283FOR WATER OUTLET INSTALLATION.

See page 274 for warranty information.

GE PROFILE™ SIDE-BY-SIDE REFRIGERATORS

	"K" SERIES	
	PSS28KYH	**PSE25KYH**
ENERGY STAR® certified		●
UFAS compliant	●	●
CAPACITY		
Total (cu. ft.)	28.4	25.3
Fresh food (cu. ft.)	18.00	16.23
Freezer (cu. ft.)	10.16	9.03
FRESH-FOOD FEATURES		
Air tower	●	●
Electronic sensors	●	●
Actual-temperature display	●	●
External controls	●	●
Turbo Cool setting	●	●
GE water filtration system	XWFE	XWFE
Dispenser	Crushed ice, cubes, water	Crushed ice, cubes, water
Integrated design	●	●
Light	LED	LED
Child lock and door alarm	●	●
Quick Ice feature	●	●
Water filter indicator light	●	●
Cabinet shelves	4 glass	4 glass
Adjustable	3	3
Slide-out, spillproof	2	2
Crisper cover (fixed)	1	1
Quick Space shelf	●	●
Integrated shelf-support system	●	●
3-stack drawer system	●	●
Top drawer	Snack	Snack
Middle drawer	Adj.-humidity	Adj.-humidity
Bottom drawer	Adj.-humidity	Adj.-humidity
Clear Look door bins	4 (3 adj. w/gallon storage)	4 (3 adj. w/gallon storage)
Interior lighting	LED	LED
FREEZER FEATURES		
Frost Guard technology	●	●
Arctica icemaker	●	●
Storage baskets	3	3
Cabinet shelves	2 glass	2 glass
Door bins	3 (2 adj.)	3 (2 adj.)
Interior lighting	LED	LED
EXTERIOR		
Color(s) available*	FS	FS
Handle color	Stainless with chrome	Stainless with chrome
Handle design	Designer-style	Designer-style
Door design	Contoured	Contoured
Door hinge	Hidden	Hidden
Textured steel door and case	Case only (dark gray)	Case only (dark gray)
Adjustable rollers	Front	Front
WEIGHTS & DIMENSIONS		
Height to top of hinge (in.) A	69-1/2	69-1/4
Height to top of case (in.) B	69	68-3/4
Case depth without door (in.) C†	28-1/2	28-1/2
Case depth less door handle (in.) D†	34	32-3/4
Case depth with door handle (in.) E†	36-1/2	35-1/4
Depth w/fresh-food door open 90° (in.) F†	50-1/2	50-1/2
Width (in.) G	35-3/4	35-3/4
Width w/door open 90° w/door handle (in.) H	46-1/2	43-1/2
Air clearances — Each side (in.)	1/8	1/8
Air clearances — Top (in.)	1	1
Air clearances — Back (in.)	2	2
Approximate shipping wt. (lbs.)	370	380
Power/Rating	120V, 60Hz, 15Amps	120V, 60Hz, 15Amps

*Color(s) available: SS = Stainless, TS = Black Stainless.
†Water hookup fits in back air clearance when calculating installation depth.
If installed against a wall, allow clearance of 14-3/16" on 25 cu. ft. and 28 cu. ft. models on freezer side to remove ice bin. To remove fresh-food pans, remove door bins. Clearances required to remove fresh-food full-size pan without disassembling: 19" on 25 cu. ft. and 28 cu. ft. Allow additional space for any necessary leveling adjustments.
ALL MODELS AVAILABLE IN U.S. AND CANADA.

SIDE-BY-SIDE REFRIGERATORS DIMENSIONS

Listed by Underwriters Laboratories

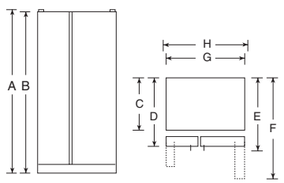

FRONT VIEW TOP VIEW

SEE PAGE 283 FOR WATER OUTLET INSTALLATION.

Above illustrations intended for dimensional reference only.
Refer to photography for actual product appearance.

GE SIDE-BY-SIDE REFRIGERATORS

	"G" SERIES				"I" SERIES
	GSE25GSH GSE25GGH	**GSS25GSH GSS25GMH GSS25GGH**	**GSE23GSK GSE23GGK**	**GSS23GSK GSS23GMK GSS23GGK**	**GSS25IYN GSS25IMN GSS25IEN GSS25IGN**
ENERGY STAR certified	●		●		
UFAS compliant	●	●	●	●	●
CAPACITY					
Total (cu. ft.)	25.3	25.3	23.2	23.2	25.1
Fresh food (cu. ft.)	16.07	16.07	16.23	16.23	16.23
Freezer (cu. ft.)	9.25	9.25	6.94	6.94	8.91
FRESH-FOOD FEATURES					
Electronic sensors	●	●	●	●	●
Exterior temperature controls	Actual temp.	Actual-temp.	Actual-temp.	Actual-temp.	Actual-temp.
GE water filtration system	XWFE	XWFE	XWFE	XWFE	XWFE
Dispenser	Arctica icemaker with crushed ice, cubes & water	Arctica icemaker with crushed ice, cubes & water	Arctica icemaker with crushed ice, cubes & water	Arctica icemaker with crushed ice, cubes & water	Water, cubed/ crushed ice
Light and child lock	Yes	Yes	Yes	Yes	Yes
Door alarm	●	●	●	●	●
Water filter indicator light	●	●	●	●	●
Cabinet shelves	4 glass	4 glass	4 glass	4 glass	4 glass, edge to edge
Adjustable	3	3	3 (2 slide-out)	3 (2 slide-out)	3
Slide-out, spillproof	3 (2 slide-out)	3 (2 slide-out)	●	●	3 (slide-out)
Integrated shelf support system	●	●	●	●	●
Drawer system	3	3	3	3	3
Top drawer	Adj.-humidity	Adj.-humidity	Adj.-humidity	Adj.-humidity	Adj.-humidity
Bottom drawer	●	●	●	●	●
Snack drawer	Floating	Floating	Floating	Floating	●
Door bins	4 (2 adj. with gallon storage)	4 (2 adj. with gallon storage)	4 (2 adj. with gallon storage)	4 (2 adj. with gallon storage)	4 (3 adj. with gallon storage)
Dairy compartment	●	●	●	●	●
Interior lighting	●	LED	●	LED	●
FREEZER FEATURES					
Frost Guard technology	●	●	●	●	●
Factory-installed icemaker	●	●	●	●	●
Cabinet shelves	3 (2 adj.) wire	3 (2 adj.) wire	3 (2 adj.) wire	3 (2 adj.) wire	3 glass, edge-to-edge
Storage basket(s)	1 slide-out	1 slide-out	1 slide-out	1 slide-out	2
Door bins	4 (2 adj.)	4 (2 adj.)	4 (2 adj.)	4 (2 adj.)	1
Interior light	●	LED	●	LED	●
EXTERIOR					
Color(s) available*	SS/WW, CC, BB	SS/ES/WW, BB	SS/WW, CC, BB	SS/ES/WW, BB	FS/ES/DS/WW, BB
Handle color	Stainless with chrome Color-matched	Stainless with chrome Stainless with chrome Color-matched	Stainless Color-matched	Stainless Stainless Color-matched	Stainless Stainless Color-matched
Handle design	Designer-style	Designer-style	Designer-style	Designer-style	Designer-style
Door design	Contoured High-gloss contoured	Contoured High-gloss contoured	Contoured High-gloss contoured	Contoured High-gloss contoured	Contoured/Smooth
Textured steel case	Case only (dark gray) Case only (color-matched)	Case only (dark gray) Case only (dark gray) Case only (color-matched)	Case only (dark gray) Case only (color-matched)	Case only (dark gray) Case only (dark gray) Case only (color-matched)	Dark gray (premium finishes), color-matched (color models)
Adjustable rollers	Front	Front	Front	Front	2-point adjustable
WEIGHTS & DIMENSIONS					
Height to top of hinge (in.) A	69-1/2	69-1/2	69-1/2	69-1/2	70-1/8
Height to top of case (in.) B	69	69	69-1/2	69-1/2	69
Case depth without door (in.) C†	28-1/2	28-1/2	28-1/2	28-1/2	28-1/2
Case depth less door handle (in.) D†	32-3/4	32-3/4	32-3/4	32-3/4	32-3/4
Case depth with door handle (in.) E†	35-1/4	35-1/4	35-1/4	35-1/4	34-3/4
Depth w/fresh-food door open 90° (in.) F†	50-1/2	50-1/2	50-1/2	50-1/2	50-1/2
Width (in.) G	35-3/4	35-3/4	32-3/4	32-3/4	36
Width w/door open 90° with door handle (in.) H	43-1/2	43-1/2	38-1/4	38-1/4	42-1/4
Air clearances — Each side (in.)	1/8	1/8	1/8	1/8	1/8
Air clearances — Top (in.)	1	1	1	1	1
Air clearances — Back (in.)	2	2	2	2	2
Approx. shipping wt. (lbs.)	340	340	344	344	320
Power/Ratings	120V, 60Hz, 15Amps	120V, 60Hz, 15Amps	120V, 60Hz, 15Amps	120V, 60Hz, 15Amps	120V, 60Hz, 15Amps

*Color(s) available: SS = Stainless, FS = Fingerprint Resistant Stainless, ES = Slate, DS = Black Slate, WW = White, CC = Bisque, BB = Black.
†Water hookup fits in back air clearance when calculating installation depth.
If installed against a wall, allow clearance of 10-3/4" on 23 cu. ft. models; 14-1/4" on 25 cu. ft. models on freezer side to remove bin. Clearances required to remove fresh-food full-size pan without disassembling: 15" on 23 cu. ft.; and 19" on 25 cu. ft.
Allow additional space for any necessary leveling adjustments.
ALL MODELS AVAILABLE IN U.S. AND CANADA.

SIDE-BY-SIDE REFRIGERATORS DIMENSIONS

Listed by Underwriters Laboratories

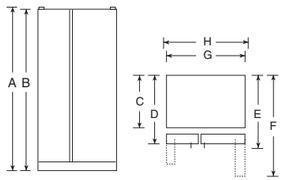

FRONT VIEW TOP VIEW

SEE PAGE 283 FOR WATER OUTLET INSTALLATION.

Above illustrations intended for dimensional reference only.
Refer to photography for actual product appearance.

TOP-FREEZER REFRIGERATORS

	GE			
	GTE16DTN	**GTS16DTN**	**GPE17CTN**	**GTS17DTN**
ENERGY STAR® certified	●		●	
#1 in quality & dependability†	●	●	●	●
UFAS/ADA compliant	●	●	●	●
CAPACITY				
Total (cu. ft.)	16.6	15.6	16.6	16.6
Fresh food (cu. ft.)	12.6	11.58	12.6	12.6
Freezer (cu. ft.)	4.04	4.04	4.04	4.04
FRESH-FOOD FEATURES				
Upfront temperature controls	●		●	●
Cabinet shelves	2 wire (adj), 1 glass (fixed)	2 wire (adj), 1 glass (fixed)	2 wire (adj), 1 glass (fixed)	2 wire (adj), 1 glass (fixed)
Drawers	2 clear	2 clear	2 clear	2 clear
Door shelves	2 full-width (2 with gallon storage)	2 full-width (2 with gallon storage)	2 full-width (2 with gallon storage)	2 full-width (2 with gallon storage)
Dairy compartment	●	●	●	●
Interior lighting	LED	LED	LED	LED
Never Clean condenser	●	●	●	●
FREEZER FEATURES				
Icemaker	Opt. (IM4D)	Opt. (IM4D)	Opt. (IM4D)	Opt. (IM4D)
Spillproof freezer floor	●	●	●	●
Freezer compartment shelves	1 full-width wire	1 full-width wire	1 full-width wire	1 full-width wire
Fixed door shelves	2 full-width	2 full-width	2 full-width	2 full-width
EXTERIOR				
Color(s) available*	WW/CC	WW	WW	WW/BB
Handle color	Smooth color-matched	Smooth color-matched	Smooth color-matched recessed	Smooth color-matched
Handle design	Designer-style	Designer-style	Side pocket	Designer-style
Field-installed handles	●	●	●	●
Door design	Textured	Textured	Textured	Textured
Textured steel case	Color-matched	Color-matched	Color-matched	Color-matched
Reversible doors	●	●	●	●
WEIGHTS & DIMENSIONS				
Height to top of hinge (in.) A	61-3/4	61-3/4	64-3/4	64-3/4
Height to top of case (in.) B	61-1/4	61-1/4	64-1/4	64-1/4
Case depth without door (in.) C	26-3/4	26-3/4	26-3/4	26-3/4
Case depth less door handle (in.) D	30-1/2	30-1/2	30-1/2	30-1/2
Case depth with door handle (in.) E	32-5/8	32-5/8	30-1/2	32-5/8
Depth w/fresh-food door open 90° (in.) F	57	57	57	57
Width (in.) G	28	28	28	28
Width w/door open 90° with door handle (in.) H	30-5/8	30-5/8	28-1/2	30-5/8
Air clearances — Each side (in.)	3/4	3/4	3/4	3/4
Air clearances — Top (in.)	1	1	1	1
Air clearances — Back (in.)	1	1	1	1
Approx. shipping wt. (lbs.)	165	165	171	171
Power/Ratings	120V, 60Hz, 15Amps	120V, 60Hz, 15Amps	120V, 60Hz, 15Amps	120V, 60Hz, 15Amps

*Color(s) available: WW = White, CC = Bisque, BB = Black.
**Available in left-hand door swing on white model only.
†Among 14-18 cu. ft. refrigerators based on an independent study of property management personnel. Source: The Stevenson, Company, 2016.

TOP-FREEZER REFRIGERATORS DIMENSIONS

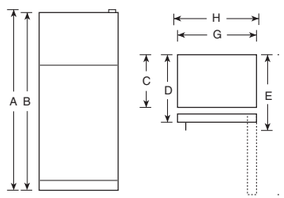

FRONT VIEW **TOP VIEW**

Above illustrations intended for dimensional reference only.
Refer to photography for actual product appearance.

See page 274 for warranty information.

	GE								
	GTE17DTN	**GTS17GSN GTS17GTN**	**GTE17GTN GTE17GSN**	**GIE17GSN**	**GTS18DTN**	**GTE18DTN GTE18DCN**	**GTE19DTN**	**GIE18DTN**	**GTS18GSN GTS18GTN**
ENERGY STAR certified	●		●	●		●	●	●	
#1 in quality & dependability†	●	●	●	●	●	●		●	●
UFAS/ADA compliant	●	●	●	●			●		
CAPACITY									
Total (cu. ft.)	16.6	16.6	16.6	16.6	17.5	17.5	9.2	17.5	17.5
Fresh food (cu. ft.)	12.6	12.6	12.6	12.6	13.49	13.9	13.59	13.49	13.49
Freezer (cu. ft.)	4.04	4.04	4.04	4.04	4.04	4.04	5.57	4.04	4.04
FRESH-FOOD FEATURES									
Upfront temperature controls	●	●	●	●	●	●	●	●	●
Autofill pitcher									
Cabinet shelves	2 wire (adj.), 1 glass (fixed)	2 glass (adj.), 1 glass (fixed)	2 glass (adj.), 1 glass (fixed)	2 glass (adj.), 1 glass (fixed)	2 wire (adj.), 1 glass (fixed)	2 wire (adj.), 1 glass (fixed)	1 glass	2 wire	2 wire (adj.), 1 glass (fixed)
Drawers	2 clear	2 clear	2 clear	2 clear	2 clear	2 clear	2 clear	2 clear	2 clear
Deli bin	1 sliding	1 sliding	1 sliding	1 sliding					1 Snack
Door shelves	2 full-width (2 with gallon storage)	2 full-width (2 with gallon storage)	2 full-width (2 with gallon storage)	2 full-width (2 with gallon storage)	3 full-width (2 with gallon storage)	3 full-width (2 with gallon storage)	2 half-width (adj. with gallon storage	2 full-width (2 with gallon storage)	3 full-width (2 with gallon storage)
Dairy compartment	●	●	●	●	●	●	●	●	●
Interior lighting	LED	LED	LED	LED	LED	LED		LED	LED
Never Clean condenser	●	●	●	●	●	●	●	●	●
FREEZER FEATURES									
Icemaker	Opt. (IM4D)	Opt. (IM4D)	Opt. (IM4D)	Factory-installed	Opt. (IM4D)	Opt. (IM4D)	Opt. (IM4D)	Factory-installed	Opt. (IM4D)
Spillproof freezer floor	●	●	●	●	●	●	●	●	●
Freezer compartment shelves	1 full-width wire	1 full-width wire	1 full-width wire	1 full-width wire	1 full-width wire	1 full-width wire		1 full-width wire	1 full-width wire
Fixed door shelves	2 full-width	2 full-width	2 full-width	2 full-width	2 full-width	2 full-width	2 fixed	2 full-width	2 full-width
EXTERIOR									
Color(s) available*	WW, CC, BB	SS/WW	SS, WW/BB	SS	WW, BB	SA, WW/BB	WW, BB	WW, BB	SS, WW/BB
Handle color	Smooth color-matched	Smooth color-matched	Smooth color-matched	Stainless	Smooth color-matched	Smooth color-matched	Smooth color-matched	Smooth color-matched	Smooth color-matched
Handle design	Designer-style	Designer-style	Designer-style	Designer-style	Designer-style	Designer-style		Designer-style	Designer-style
Field-installed handles	●	●	●	●	●	●		●	●
Door design	Textured	Textured	Textured	Textured	Textured	Textured	Textured	Textured	Textured
Textured steel case	Color-matched	Color-matched	Dark gray (premium finishes), color-matched (color models)	Case only (dark gray)	Color-matched	Dark gray (premium finishes), color-matched (color models)	Color-matched	Color-matched	Dark gray (premium finishes), color-matched (color models)
Reversible doors	●	●	●	●	●	●	●	●	●
WEIGHTS & DIMENSIONS									
Height to top of hinge (in.) A	64-3/4	64-3/4	64-3/4	64-3/4	67-3/8	67-3/8	66-3/8	67-3/8	67-3/8
Height to top of case (in.) B	64-1/4	64-1/4	64-1/4	64-1/3	66-7/8	66-7/8	65-7/8	65-7/8	66-7/8
Case depth without door (in.) C	26-3/4	26-3/4	26-3/4	26-3/4	26-3/4	26-3/4	28-5/8	26-3/4	26-3/4
Case depth less door handle (in.) D	30-1/2	30-1/2	30-1/2	30-1/2	30-1/2	30-1/2	30	30-1/2	30-1/2
Case depth with door handle (in.) E	32-5/8	32-5/8	32-5/8	32-5/8	32-5/8	32-5/8	34-1/2	32-5/8	32-1/2
Depth w/fresh-food door open 90° (in.) F	57	57	57	57	57	57	30	60-1/2	57
Width (in.) G	28	28	28	28	28	28	29-3/4	29 3/4	28
Width w/door open 90° w/door handle (in.) H	30-5/8	30-5/8	30-5/8	30-5/8	30-5/8	30-5/8	32-3/8	30-5/8	30-5/8
Air clearances — Each side (in.)	3/4	3/4	3/4	3/4	3/4	3/4	3/4	3/4	3/4
Air clearances — Top (in.)	1	1	1	1	1	1	1	1	1
Air clearances — Back (in.)	1	1	1	1	2	2	2	2	2
Approx. shipping wt. (lbs.)	172	172	175	177	179	179	225	181	192
Power/Ratings	120V, 60Hz, 15Amps								

*Color(s) available: SS = Stainless, ES = Slate, WW = White, CC = Bisque, SA = Silver, BB = Black.
†Among 14-18 cu. ft. refrigerators based on an independent study of property management personnel. Source: The Stevenson, Company, 2016.

TOP-FREEZER REFRIGERATORS DIMENSIONS

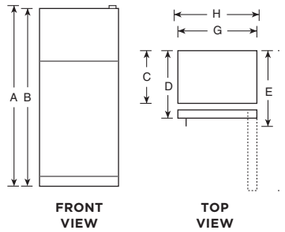

FRONT VIEW **TOP VIEW**

Above illustrations intended for dimensional reference only.
Refer to photography for actual product appearance.

See page 274 for warranty information.

TOP-FREEZER REFRIGERATORS

	GE							
	GTE18GMN GTE18GSN GTE18GTN	**GIE18GSN GIE18GTN GIE18GCN**	**GTS18HSN GTS18HGN GTS18HMN**	**GTE19DTN**	**GTE19JSN GTE19JTN**		**GIE19JSN**	**GTS19KGN GTS19KMN GTS19KSN**
ENERGY STAR® certified	●	●		●	●		●	
#1 in quality & dependability†	●	●	●					
UFAS/ADA compliant				●	●		●	
CAPACITY								
Total (cu. ft.)	17.5	17.5	17.5	19.2	19.2		19.2	19.2
Fresh food (cu. ft.)	13.49	13.49	13.49	13.5	13.51		13.59	13.59
Freezer (cu. ft.)	4.04	4.04	4.04	5.6	5.57		5.57	5.57
FRESH-FOOD FEATURES								
Upfront temperature controls	●	●	●	●	●		●	●
Cabinet shelves	2 glass (adj.), 1 glass (fixed)	2 glass (adj.), 1 glass (fixed)	2 glass (adj.), 1 glass (fixed)	2 wire, 1 glass	2 glass (adj.), 1 glass (fixed)		2 glass (adj.), 1 glass (fixed)	2 glass (adj.), 1 glass (fixed)
Adjustable	2 full-width	2 full-width	2 full-width	2 adj.	2 full-width		2 full-width	2 full-width
Drawers	2 clear	2 clear	2 clear	2 clear	2 clear		2 clear	2 clear
Deli bin	1 sliding	1 sliding	1 sliding		1 sliding		1 sliding	1 sliding
Door shelves	3 full-width (2 with gallon storage)	3 full-width (2 with gallon storage)	3 full-width (2 with gallon storage)	2 half-width (adj. gallon storage)	2 full-width (1 with gallon storage)		2 full-width (1 with gallon storage)	2 full-width (1 with gallon storage)
Dairy compartment	●	●	●	●	●		●	●
Interior lighting	LED	LED	LED	LED	LED		LED	LED
Never Clean condenser	●	●	●	●	●		●	●
FREEZER FEATURES								
Icemaker	Opt. (IM4D)	Factory-installed	Opt. (IM4D)	Opt. (IM4D)	Opt. (IM4D)		Factory-installed	Opt. (IM4D)
Spillproof freezer floor	●	●	●	●	●		●	●
Freezer compartment shelves	1 full-width wire	1 full-width wire	1 full-width glass	1 adjustable wire	1 full-width wire		1 full-width wire	1 full-width glass
Fixed door bins					2 adj.		2 adj.	2 adj.
Fixed door shelves	2 full-width	2 full-width	2 full-width	2 fixed	2 full-width		2 full-width	2 full-width
EXTERIOR								
Color(s) available*	SS, ES, WW/CC/BB	SS, SA, WW/BB	SS, ES, WW/BB	WW, BB	SS,WW/BB		SS	SS, ES, WW/BB
Handle color	Smooth color-matched	Smooth color-matched	Smooth color-matched	Smooth color-matched	Smooth color-matched		Smooth color-matched	Smooth color-matched
Handle design	Designer-style	Designer-style	Designer-style		Designer-style		Designer-style	Designer-style
Field-installed handles	●	●	●		●		●	●
Door design	Textured	Textured	Smooth	Textured	Textured		Textured	Smooth
Textured steel case	Dark gray (premium finishes), color-matched (color models)	Dark gray (premium finishes), color-matched (color models)	Dark gray (premium finishes), color-matched (color models)	Color-matched	Dark gray (premium finishes), color-matched (color models)		Case only (dark gray)	Dark gray (premium finishes), color-matched (color models)
Reversible doors	●	●	●	●	●		●	●
WEIGHTS & DIMENSIONS								
Height to top of hinge (in.) A	67-3/8	67-3/8	67-3/8	66 3/8	66-3/8		66-3/8	66-3/8
Height to top of case (in.) B	66-7/8	66-7/8	66-7/8	65-7/8	65-7/8		65-7/8	65-7/8
Case depth without door (in.) C	26-3/4	26-3/4	26-3/4	28 5/8	28-5/8		28-5/8	28-5/8
Case depth less door handle (in.) D	30-1/2	30-1/2	30-1/2	32-5/8	32-3/8		32-3/8	32-3/8
Case depth with door handle (in.) E	32-5/8	32-5/8	32-5/8	34 1/2	34-1/2		34-1/2	34-1/2
Depth w/fresh-food door open 90° (in.) F	57	57	57	60-1/2	60-1/2		60-1/2	60-1/2
Width (in.) G	28	28	28	29-3/4	29-3/4		29-3/4	29-3/4
Width w/door open 90° w/door handle (in.) H	30-5/8	30-5/8	30-5/8	29-6/7	32-3/8		32-3/8	32-3/8
Air clearances — Each side (in.)	3/4	3/4	3/4	1/8	1/8		1/8	1/8
Air clearances — Top (in.)	1	1	1	1	1		1	1
Air clearances — Back (in.)	2	2	2	2	2		2	2
Approx. shipping wt. (lbs.)	192	192	208	197	239		239	192
Power/Ratings	120V, 60Hz, 15Amps	120V, 60Hz, 15Amps	120V, 60Hz, 15Amps	120V, 60Hz, 15Amps	120V, 60Hz, 15Amps		120V, 60Hz, 15Amps	120V, 60Hz, 15Amps

*Color(s) available: SS = Stainless, ES = Slate, DS=Black Slate, SA=Silver, WW = White, CC = Bisque, BB = Black.
†Among 14-18 cu. ft. refrigerators based on an independent study of property management personnel. Source: The Stevenson, Company, 2016.

TOP-FREEZER REFRIGERATORS DIMENSIONS

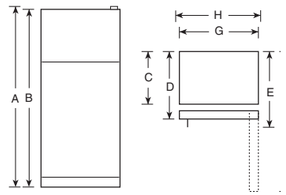

Note: All top-freezer, no-frost, right-hand refrigerator doors: As you face the front of the refrigerator, the handle is on your left and the hinges are on your right.
All top-freezer, no-frost, left-hand refrigerator doors: As you face the front of the refrigerator, the handle is on your right and the hinges are on your left.

Listed by Underwriters Laboratories

Above illustrations intended for dimensional reference only.
Refer to photography for actual product appearance.

Above illustrations intended for dimensional reference only.
Refer to photography for actual product appearance.

TOP-FREEZER REFRIGERATORS

	GE				
	GTE22JMN	GTE21GTH GTE21GSH	GIE22JMN	GIE21GTH GIE21GSH	GTS22KGN GTS22KMN GTS22KSN
ENERGY STAR® certified	●	●	●	●	
UFAS/ADA compliant	●	●	●	●	
CAPACITY					
Total (cu. ft.)	21.9	21.1	21.9	21.1	21.9
Fresh food (cu. ft.)	15.25	15.1	15.25	15.1	15.25
Freezer (cu. ft.)	6.68	6.04	6.68	6.04	6.68
FRESH-FOOD FEATURES					
Upfront temperature controls	●	●	●	●	●
Cabinet shelves	2 glass (adj.), 1 glass (fixed)	2 glass	2 glass (adj.), 1 glass (fixed)	2 glass	2 glass (adj.), 1 glass (fixed)
Adjustable		2 full-width		2 full-width	
Spillproof		Resistant		Resistant	
Drawers	2 clear	2 adj.-humidity	2 clear	2 adj.-humidity	2 clear
Deli bin	1 sliding		1 sliding		1 sliding
Snack drawer		Clear		Clear	
Door shelves	2 full-width (1 with gallon storage)	3 fixed (2 with gallon storage)	2 full-width (1 with gallon storage)	3 fixed (2 with gallon storage)	2 full-width (1 with gallon storage)
Dairy compartment	●	●	●	●	●
Interior lighting	LED	●	LED	●	LED
Never Clean condenser	●	●	●	●	●
FREEZER FEATURES					
Icemaker	Opt. (IM4D)	Opt. (IM4D)	Factory-installed	Factory-installed	Opt. (IM4D)
Spillproof freezer floor	●	●	●	●	●
Freezer compartment shelves	1 full-width wire	1 full-width wire	1 full-width wire	1 full-width wire	1 full-width glass
Fixed door shelves/bins	2 full-width	2 full-width	2 full-width	2 full-width	2 full-width
EXTERIOR					
Color(s) available*	ES	SS/WW/BB/CC	ES	SS/WW/BB	SS/ES/DS/WW/BB
Handle color	Smooth color-matched	Stainless with chrome	Smooth color-matched	Color-matched	Smooth color-matched
Handle design	Designer-style	Designer-style	Designer-style	Designer-style	Designer-style
Field-installed handles	●	●	●	●	●
Door design	Textured	Textured	Textured	Textured	Smooth
Textured steel case	Dark gray (premium finishes)	Dark gray (premium finishes), color-matched (color models)	Dark gray (premium finishes)	Dark gray (premium finishes), color-matched (color models)	Dark gray (premium finishes), color-matched (color models)
Reversible doors	●	●	●	●	●
WEIGHTS & DIMENSIONS					
Height to top of hinge (in.) A	66-3/8	66-3/4	66-3/8	66-3/4	66-3/8
Height to top of case (in.) B	65-7/8	66-1/4	65-7/8	66-1/4	65-7/8
Case depth without door (in.) C	28-5/8	29	28-5/8	29	25-5/8
Case depth less door handle (in.) D	32-3/8	32-1/4	32-3/8	32-1/4	32-3/8
Case depth with door handle (in.) E	34-1/2	34	34-1/2	34	34-1/2
Depth w/fresh-food door open 90° (in.) F	63-1/2	62-3/4	63-1/2	62-3/4	63-1/2
Width (in.) G	32-3/4	32-7/8	32-3/4	32-7/8	32-3/4
Width w/door open 90° with door handle (in.) H	35-3/8	35-1/2	35-3/8	35-1/2	35-3/8
Air clearances — Each side (in.)	1/8	1/8	1/8	1/8	1/8
Air clearances — Top (in.)	1	1/8	1	1/8	1
Air clearances — Back (in.)	2	1	2	1	2
Approx. shipping wt. (lbs.)	238	238	238	238	227
Power/Ratings	120V, 60Hz, 15Amps	120V, 60Hz, 15Amps	120V, 60Hz, 15Amps	120V, 60Hz, 15Amps	120V, 60Hz, 15Amps

*Color(s) available: SS = Stainless, ES = Slate, DS=Black Slate, WW = White, CC = Bisque, BB = Black.
†Among 14-18 cu. ft. refrigerators based on an independent study of property management personnel. Source: The Stevenson, Company, 2016.

	GE
	GPE12FSK GPE12FGK
ENERGY STAR certified	●
ADA compliant	●
CAPACITY	
Total (cu. ft.)	11.6
Fresh-food (cu. ft.)	8.48
Freezer (cu. ft.)	3.14
FRESH-FOOD FEATURES	
Upfront temperature controls	Electronic
Cabinet shelves	2 spillproof glass
Spill-resistant	●
Drawers	2 clear
Door shelves	3 full-width (2 with gallon storage)
Interior lighting	LED
Never Clean condenser	●
FREEZER FEATURES	
Factory-installed icemaker and bin	Opt. (IM4D)
Wire freezer compartment shelves	Step
Fixed door shelves	2 clear full-width
EXTERIOR	
Color(s) available*	SB WW, BB
Handle color	Black Color-matched
Handle design	Recessed
Exterior design	Rounded doors
Smooth steel door and case	●
Reversible doors	●
WEIGHTS & DIMENSIONS	
Height to top of hinge (in.) A	59-7/8
Height to top of case (in.) B	59-3/8
Case depth without door (in.) C	25-5/8
Case depth less door handle (in.) D	28-5/8
Case depth with door handle (in.) E	28-5/8
Depth w/fresh food door open 90° (in.) F	50-5/8
Width (in.) G	24
Width w/door open 90° w/door handle (in.) H	25-1/8
Air clearances — Each side (in.)	1
Air clearances — Top (in.)	4
Air clearances — Back (in.)	3
Approx. shipping wt. (lbs.)	151
Power/Ratings	120V, 60Hz, 15Amps

*Color(s) available: SB = Stainless, WW = White, BB = Black.

TOP-FREEZER REFRIGERATORS DIMENSIONS

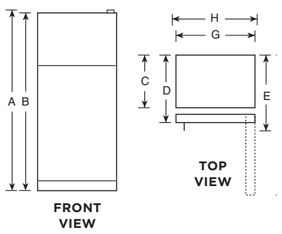

TOP-FREEZER REFRIGERATOR DIMENSIONS

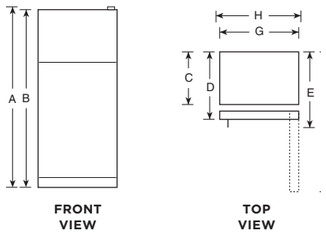

Above illustrations intended for dimensional reference only. Refer to photography for actual product appearance.

See page 274 for warranty information.

GE WINE AND BEVERAGE CENTERS

	WINE CENTERS		BEVERAGE CENTERS	
	PWS06DSP	GWS04HAE	PVS06BSP	GVS04BQN
CAPACITY				
Total (cu. ft.)	4.8	4.1	5.1	4.1
Can capacity			155	125
Bottle capacity	44	30	52	31
FRESH-FOOD FEATURES				
Temperature controls	Dual Zone: Upper: 43–61°F, Lower: 44–62°F	Electronic with actual-temp. (45°–61°F)	Adjustable 38–61°F	Electronic with actual-temp. (41°–61°F)
Glass door	Glass door with stainless trim	Tinted w/stainless trim	Glass door with stainless trim	Tinted w/stainless trim
Door design	Contoured	Flat	Contoured	Flat
Shelves	6 wood extension shelves	4 full-depth removable, 1 half-depth	4 wood and glass reversible	3 full-depth removable, 2 half-depth
Wine racks	6 Sliding wine racks	5	4	5 wood
Full-extension	3/4 extension			
Reversible shelves			●	
Interior lighting	Display (on) / Door (on/off)	●	Display (on) / Door (on/off)	●
Lock		●		●
Door Alarm	●		●	
EXTERIOR				
Color(s) available	Black case with Fingerprint Resistant Stainless trim	Black case and stainless trim	Black case with Fingerprint Resistant Stainless trim	Black case and stainless trim
Door handle	Color-matched	Stainless	Color-matched	Stainless
Built-in capability	●	●	●	●
Free-standing capability	●	●	●	●
Cabinet liner color	Black	Black	Black	Black
Reversible door				
WEIGHTS & DIMENSIONS				
Height (in.) A	33-3/4	33	33-3/4	33
Width (in.) B	23-1/2	19	23-1/2	19
Depth with handle (in.) C	24-5/8	22-1/2	24-5/8	22-1/2
Depth with door open 90° (in.) D	45-1/4	38-5/8	45-1/4	38-5/8
Air clearances — Each side (in.)	0	0	0	0
Air clearances — Back (in.)	0	0	0	0
Air clearances — Top (in.)	0	0	0	0
Approx. shipping wt. (lbs.)	125	77	125	77

WINE AND BEVERAGE CENTERS DIMENSIONS

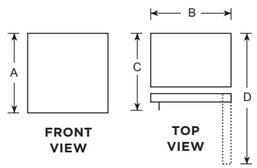

Above illustrations intended for dimensional reference only. Refer to photography for actual product appearance.

See page 274 for warranty information.

COMPACT REFRIGERATORS

	GE		
	GCE06GSH GCE06GGH	GME04GLK GME04GGK	GDE03GLK GDE03GGK
ENERGY STAR® certified	●	●	●
CAPACITY			
Total (cu. ft.)	5.6	4.4	3.1
Fresh food (cu. ft.)	5.12	3.93	2.12
Freezer (cu. ft.)	.49**	.47**	.93**
FEATURES			
Ice trays	2 mini	1 mini	1 mini
Defrost	Manual	Manual	Partial automatic
Crisper drawer	●		●
Cabinet shelves	2 glass	3 glass	2 glass
Can rack	●	●	●
Door shelves	1 full-width, 2 half-width	1 full-width, 2 half-width	2 half-width
Separate true freezer			●
Interior light	●		●
ECONOMICAL/QUIET			
Cabinet/door insulation	Foam	Foam	Foam
EXTERIOR			
Color(s) available*	SB WW, BB	LB WW, BB	LB WW, BB
Door handle	Black recessed Color-matched recessed	Black recessed Color-matched recessed	Black recessed Color-matched recessed
Rounded door		●	●
Reversible door	●	●	●
WEIGHTS & DIMENSIONS			
Height (in.) A	34-1/8	33-7/8	33-3/8
Width (in.) B	23-5/8	19-3/4	18-3/4
Depth with handle (in.) C	23-3/4	21-1/4	20-1/8
Depth with door open 90° (in.) D	46	39-1/8	37
Air clearances — Each side (in.)	0†	1/2	1/2
Air clearances — Top (in.)	0	2	2
Air clearances — Back (in.)	0	2	2
Approx. shipping wt. (lbs.)	85	65	63
Voltage rating	120V	120V	120V

*Color(s) available: SB = Stainless, LB = CleanSteel™, WW = White, BB = Black.
**Compartment for short-term storage of frozen food. The frozen food compartment of this refrigerator will make ice, and pre-frozen foods can be stored for about two weeks. It will not effectively freeze fresh foods or provide long-term storage for meats, poultry, or fish.
†If installed against a wall, allow 1-1/4" on hinge side to allow for proper door opening.

COMPACT REFRIGERATORS DIMENSIONS

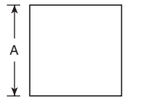

FRONT VIEW

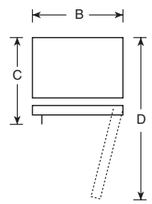

TOP VIEW

Listed by Underwriters Laboratories

ICE MAKERS

	GOURMET ICE	NUGGET ICE
	UCC15NJII	UNC15NJII
CAPACITY		
Daily ice production (lbs.)	Up to 48	Up to 56
Storage bin capacity (lbs.)	26	26
FEATURES		
Interior lighting	LED	LED
Clean light	Yes	Yes
Control type	Electronic LED	Electronic LED
Ice scoop	Yes	Yes
EXTERIOR		
Handle	Custom handle or Stainless door accessory kit required	Custom handle or Stainless door accessory kit required
Panel capability	3/4" custom panel or accessory door kit	3/4" custom panel or accessory door kit
Color appearance	Custom panel and handle or Stainless door accessory required	Custom panel and handle or Stainless door accessory required
Door swing	Reversible hinges	Reversible hinges
Installation	Built-in or freestanding Indoor or outdoor	Built-in or freestanding Indoor or outdoor
Leveling system	4 leveling legs	4 leveling legs
WEIGHTS & DIMENSIONS		
Width (in.)	14-7/8	14-7/8
Height (in.)	33-7/8	33-7/8
Depth (in.)	22-3/4	22-3/4
Depth excluding panel (in.)	22	22
Net weight (lbs.)	107	112
Approx. shipping weight (lbs.)	115	120
Power/Ratings	110V, 60Hz, 5A	110V, 60Hz, 5A
ACCESSORIES		
Optional Stainless panel with handle	PIP70SS (Stainless panel with GE Profile™ handle)	PIP70SS (Stainless panel with GE Profile handle)/ Café handle)
Optional drain pump kit	UPK3	UPK3
Optional filter	GXRLQK	GXRLQK

Above illustrations intended for dimensional reference only.
Refer to photography for actual product appearance.

See page 274 for warranty information.

UPRIGHT FREEZERS

	GE					
	Frost-free					
	FUF21DL	FUF21SM	FUF17DL	FUF17SM	FUF14DL	FUF14SM
ENERGY STAR certified	●		●		●	
CAPACITY						
Total volume (cu. ft.)	21.3	21.3	17.3	17.3	14.1	14.1
FEATURES						
Temperature control	Easy-set electronic	Easy-set electronic	Easy-set electronic	Easy-set electronic	Easy-set electronic	Easy-set electronic
Audible temperature alarm	●	●	●	●	●	●
Door ajar alarm	●	●	●	●	●	●
Door shelves (total)	4 clear	4 opaque	4 clear	4 opaque	4 clear	4 opaque
Interior lighting	LED	LED	LED	LED	LED	LED
Lock with self-ejecting key	●	●	●	●	●	●
Cabinet shelves (total)	4 glass (2 adj.)	4 wire (2 adj.)	4 glass (2 adj.)	4 wire (2 adj.)	4 glass (2 adj.)	4 wire (2 adj.)
Slide-out bulk storage basket	3 clear plastic	1 wire	3 clear plastic	1 wire	2 clear plastic	1 wire
Turbo Freeze system	●	●	●	●	●	●
Garage-ready*	●	●	●	●	●	●
ECONOMICAL/QUIET						
Magnetic door gasket	●	●	●	●	●	●
Air tower	●	●	●	●	●	●
EXTERIOR						
Color available	White	White	White	White	White	White
Door handle	High-gloss	High-gloss	High-gloss	High-gloss	High-gloss	High-gloss
Textured steel case	●	●	●	●	●	●
Smooth steel door	●	●	●	●	●	●
WEIGHTS & DIMENSIONS						
Height (in.) A	76-5/8	76-5/8	64-7/8	64-7/8	62	62
Width (in.) B	32-7/8	32-7/8	32-7/8	32-7/8	28-3/8	28-3/8
Case depth without door (in.) C	26	26	26	26	26-7/8	26-7/8
Depth without door handle (in.) D	29	29	29	29	29-3/4	29-3/4
Depth with door handle (in.) E	31-1/4	31-1/4	32-7/8	32-7/8	32-1/8	32-1/8
Depth with door open (in.) 90° F	60	60	60	60	55-3/4	55-3/4
Air clearances — Each side (in.)	3	3	3	3	3	3
Air clearances — Top (in.)	3	3	3	3	3	3
Air clearances — Back (in.)	3	3	3	3	3	3
Approx. shipping wt. (lbs.)	244	244	227	227	200	200

*GE freezers are proven to perform at room temperature ranging between 0°F to 110°F.

UPRIGHT FREEZERS DIMENSIONS

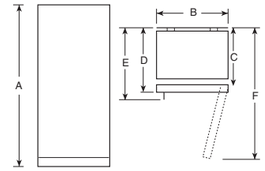

FRONT VIEW

TOP VIEW

CHEST FREEZERS

	GE					
	FCM22DL	FCM16DL	FCM16SL	FCM11PH	FCM7SK	FCM5SK
ENERGY STAR certified	●	●		●		
CAPACITY						
Total volume (cu. ft.)	21.7	15.7	15.7	10.6	7.0	5.0
FEATURES						
Manual defrost	●	●	●	●	●	●
Temperature control	Adjustable	Adjustable	Adjustable	Adjustable	Adjustable	Adjustable
Audible temperature alarm	With light and reset button	With light and reset button				
Power "ON" light	●	●	●	●	●	●
Wraparound condenser	●	●	●	●	●	●
Wraparound evaporator	●	●	●	●	●	●
Upfront defrost water drain	●	●	●	●	●	●
Interior lighting	LED	LED	LED	●		
Lock with key	●	●	●	●		
Lift-out, sliding bulk storage basket(s)	5	4	2	3	2	1
Second-level rail	●	●				
Dividers	4 customizable					
Garage ready*	●	●	●	●	●	●
ECONOMICAL/QUIET						
Insulation (cabinet and lid)	●	●	●	●	●	●
Cabinet liner	Textured aluminum	Textured aluminum	Textured aluminum	Textured aluminum	Textured aluminum	Textured aluminum
EXTERIOR						
Color available	White	White	White	White	White	White
Handle	●	●	●	Recessed	Recessed	Recessed
WEIGHTS & DIMENSIONS						
Height (in.) A	33-3/8	33-3/8	33-3/8	33-1/2	33-1/2	33-1/2
Width (in.) B	73-1/4	65	65	50-3/4	37-1/4	28-3/4
Depth (in.) C	33	28-1/2	28-1/2	27-1/2	21-1/4	21-1/4
Height with lid open (in.) D	64-1/4	60-5/8	60-5/8	59	53	53
Air clearances — Each side (in.)	2	2	2	3	3	3
Air clearances — Back (in.)	2	2	2	3	3	3
Approx. shipping wt. (lbs.)	232	181	190	125	82	69

*GE freezers are proven to perform at room temperature ranging between 0°F to 110°F.

CHEST FREEZERS DIMENSIONS

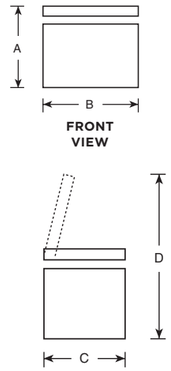

FRONT VIEW

SIDE VIEW

Above illustrations intended for dimensional reference only.
Refer to photography for actual product appearance.

See page 274 for warranty information.

30" BUILT-IN DOUBLE OVENS

	GE PROFILE™			GE	
	PTD9000SN PTD9000BN	PTD7000SN PTD7000BN	PTD700LSN PTD700RSN	JTD5000SN JTD5000EN JTD5000FN JTD5000DN	JTD3000SN JTD3000EN JTD3000DN
FEATURES & CONTROLS					
Total oven capacity (cu. ft.)	10	10	10	10	10
Oven cooking technology Upper	Convection	Convection	Convection	Convection	Traditional
Oven cooking technology Lower	Convection	Convection	Convection	Traditional	Traditional
Self-clean oven with Steam Clean option	●	●	●	●	●
Delay clean option	Variable	Variable	Variable	Variable	Variable
Automatic self-clean oven door lock	●	●	●	●	●
True European Convection	●	●	●	●	
Direct Air	●	●	●		
Convection Bake multi/single rack	●	●	●	Upper	
Convection Roast	●*	●*	●*	Upper	
Convection Broil	●*	Upper*	Upper*	Upper	
Convection Bake	●	●	●	Upper	
Thermal Bake	●	●	●	●	●
Thermal Broil	●	●	●	●	●
Precision Cooking	●*	Upper*	Upper*		
Voice control	●*	●*	●*	●	●
Dehydrate	●*	●*	●*		
No-preheat air fry	●*	●*	●*		
In-oven CookCam™	Upper*				
Ten-pass bake element	●	●	●	●	●
Ten-pass dual broil element	●				
Eight-pass broil element		●	●	●	●
Hidden bake oven interior	●	●	●	●	●
Control type	7" full-color LCD touch screen	7" full-color LCD touch screen	7" full-color LCD touch screen	Hidden backlit LCD	Glass touch
WiFi Connect	●*	●*	●*	●	●
Scan-to-Cook technology	●*	●*	●*	●	●
Auto Recipe Conversion	●	●	●	●	
Proof mode	●	●	●	●	●
Oven meat probe	●	●	●	Upper	
Warm mode	●	●	●	●	●
Temperature display	●	●	●	●	●
Delay bake option	●	●	●	●	●
°C and °F programmable	●	●	●	●	●
Audible preheat signal	●	●	●	●	●
Auto oven shut-off with override	●	●	●	●	●
Electronic clock and kitchen timer	●	●	●	●	●
Control lock capability	●	●	●	●	●
Halogen interior oven lighting	●	●	●	●	●
Certified Sabbath mode	●	●	●	●	●
Never-Scrub oven racks	●	●	●	●	●
Heavy-duty oven racks	4 roller racks	2, 2 roller racks	2, 2 roller racks	3, 1 roller rack	4
Rack positions	6 embossed (both ovens)	6 embossed (both ovens)	6 embossed (both ovens)	6 embossed (both ovens)	6 embossed (both ovens)
APPEARANCE					
Color appearance**	SS TS	SS TS	SS SS	SS ES DS WW, BB	SS ES WW, BB
Handle color**	SS TS	SS TS	SS SS	SS SS DS WW, BB	SS SS WW, BB
Door swing			Left-swing Right-swing		
Handle design	Designer-style	Designer-style	Designer-style	Designer-style	Designer-style
Oven interior	Black gloss	Black gloss	Black gloss	Black gloss	Black gloss
WEIGHTS & DIMENSIONS					
Approx. shipping wt. (lbs.)	308	308	308	263	260
Oven cabinet width required (in.)	30	30	30	30	30
Overall dimensions, including handle (WxHxD in inches)	29-3/4 x 53 x 26-3/4	29-3/4 x 53 x 26-3/4	29-3/4 x 53 x 26-3/4	29-3/4 x 53 x 26-3/4	29-3/4 x 53 x 26-3/4
Overall oven interior dimensions (WxHxD in inches)	25 x 17-3/8 x 20-1/4	25 x 17-3/8 x 20-1/4	25 x 17-3/8 x 20-1/4	25 x 17-3/8 x 20-1/4	25 x 17-3/8 x 20-1/4
POWER/RATINGS					
KW rating @ 240V	9.0	9.0	9.0	8.4	8.4
KW rating @ 208V	6.8	6.8	6.8	6.3	6.3
Amps @ 240V	40	40	40	40	40
Amps @ 208V	40	40	40	40	40
Convection wattage	2,400	2,400	2,400	2,400	
Broiler wattage	3,300/1,000	3,300/1,000	3,300/1,000	4,000	4,000
Bake wattage	2,850	2,850	2,850	2,850	2,850

*WiFi-enabled feature.
**SS = Stainless, TS = Black Stainless, ES = Slate, DS = Black Slate, WW = White on white, BB = Black on black.

OVEN SUPPORT FOR 30" OVEN MODELS

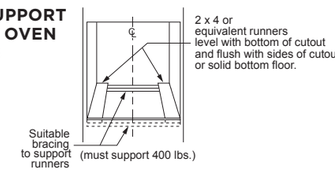

Listed by Underwriters Laboratories

30" BUILT-IN DOUBLE OVEN DIMENSIONS (IN INCHES)

MODELS PTD9000, PTD7000, JTD5000, JTD3000

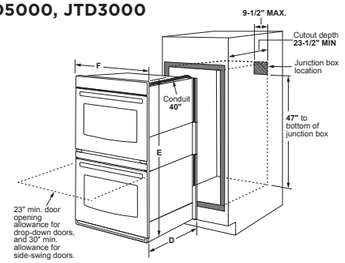

MODEL PTD700R

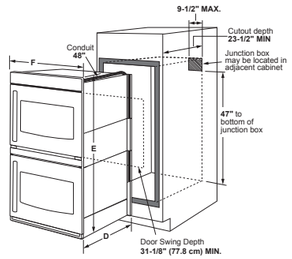

MODEL PTD700L

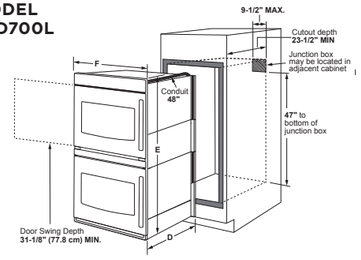

Note: Cabinets installed adjacent to wall ovens must have an adhesion spec of at least a 194°F temperature rating.

Note: If marks, blemishes or the cutout opening are visible above the installed oven, it may be necessary to add wood shims under the runners and front trim until the marks or openings are covered.

Note: Door handle protrudes 3" from door face. Cabinets and drawers on adjacent 45° and 90° walls should be placed to avoid interference with the handle.

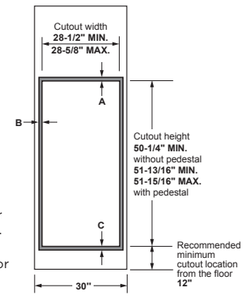

CABINET	PTD7000, JTD5000, JTD3000
A – Overlap of oven at top of cutout	1"
B – Overlap of oven other side of edge of cutout	3/4"
C – Overlap of oven at bottom of cutout	1-1/4"
OVEN	
D – Install depth	23-1/2"
E – Overall height with trim	53"
F – Overall width	29-3/4"

Above illustrations intended for dimensional reference only.
Refer to photography for actual product appearance.

27" BUILT-IN DOUBLE OVENS

	GE PROFILE	GE	
	PKD7000SN PKD7000BN	JKD5000SN JKD5000EN JKD5000DN	JKD3000SN JKD3000DN
FEATURES & CONTROLS			
Total oven capacity (cu. ft.)	8.6	8.6	8.6
Oven cooking technology Upper	Convection	Convection	Traditional
Oven cooking technology Lower	Traditional	Traditional	Traditional
Self-clean oven with Steam Clean option	●	●	●
Delay clean option	Variable	Variable	Variable
Automatic self-clean oven door lock	●	●	●
True European Convection	●	●	
Convection Bake multi/single rack	Upper	Upper	
Convection Roast	Upper*	Upper	
Convection Broil	Upper*		
Convection Bake	Upper		
Thermal Bake	●	●	●
Thermal Broil	●	●	●
Ten-pass bake element	●	●	●
Eight-pass broil element	●	●	●
Hidden bake oven interior	●	●	●
Control type	7" full-color LCD touch screen	Hidden backlit LCD	Glass touch
WiFi Connect	●*	●	●
Scan-to-Cook technology	●*	●	●
Voice control	●*	●	●
Auto Recipe Conversion	●	●	
Proof mode	●	●	●
Oven meat probe	Upper	Upper	
Warm mode	●	●	●
Temperature display	●	●	●
Delay bake option	●	●	●
°C and °F programmable	●	●	●
Audible preheat signal	●	●	●
Auto oven shut-off with override	●	●	●
Electronic clock and kitchen timer	●	●	●
Control lock capability	●	●	●
Halogen interior oven lighting	●	●	●
Certified Sabbath mode	●	●	●
Never-Scrub oven racks	●	●	●
Heavy-duty oven racks	2, 2 roller racks	3, 1 roller rack	4
Rack positions	6 embossed (both ovens)	6 embossed (both ovens)	6 embossed (both ovens)
APPEARANCE			
Color appearance**	SS TS	SS ES WW, BB	SS WW, BB
Handle color**	SS TS	SS SS WW, BB	SS WW, BB
Handle design	Designer-style	Designer-style	Designer-style
Oven interior	Black gloss	Black gloss	Black gloss
WEIGHTS & DIMENSIONS			
Approx. shipping wt. (lbs.)	241	241	229
Oven cabinet width required (in.)	27	27	27
Overall dimensions, including handle (WxHxD in inches)	26-3/4 x 51-1/8 x 26-5/8	26-3/4 x 51-1/8 x 26-5/8	26-3/4 x 51-1/8 x 26-5/8
Overall oven interior dimensions (WxHxD in inches)	21-1/2 x 17-1/4 x 20	21-1/2 x 17-1/4 x 20	21-1/2 x 17-1/4 x 20
POWER/RATINGS			
KW rating @ 240V	7.2	7.2	7.2
KW rating @ 208V	5.4	5.4	5.4
Amps @ 240V	30	30	30
Amps @ 208V	30	30	30
Convection wattage	2,400	2,400	
Broiler wattage	3,400	3,400	3,400
Bake wattage	2,600	2,600	2,600

*WiFi-enabled feature.
**SS = Stainless, TS = Black Stainless, ES = Slate, DS = Black Slate, WW = White on white, BB = Black on black.

Electric wall ovens are not approved for installation with a plug and receptacle. They must be hard wired in accordance with installation instructions.

Installation information: Before installing, consult installation instructions packed with product for current dimensional data.

27" BUILT-IN DOUBLE OVEN DIMENSIONS (IN INCHES)

MODELS PKD7000, JKD5000, JKD3000

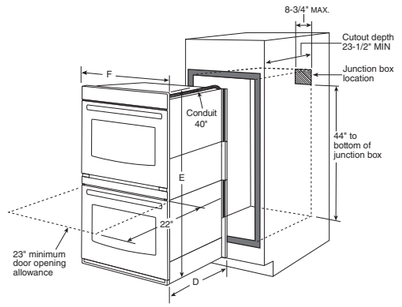

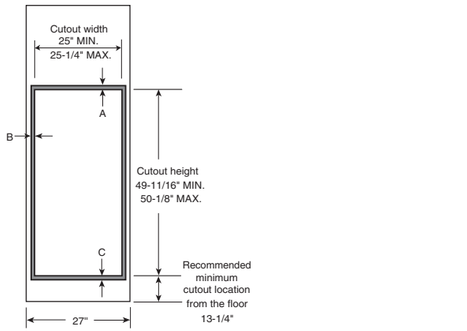

CABINET	PKD7000, JKD5000, JKD3000
A – Overlap of oven at top of cutout	1"
B – Overlap of oven other side of edge of cutout	1"
C – Overlap of oven at bottom of cutout	1"
OVEN	
D – Install depth	23-1/2"
E – Overall height with trim	51-1/8"
F – Overall width	26-3/4"

Note: Door handle protrudes 3" from door face. Cabinets and drawers on adjacent 45° and 90° walls should be placed to avoid interference with the handle.

Note: Cabinets installed adjacent to wall ovens must have an adhesion spec of at least a 194°F temperature rating.

Note: If marks, blemishes or the cutout opening are visible above the installed oven, it may be necessary to add wood shims under the runners and front trim until the marks or openings are covered.

OVEN SUPPORT FOR 27" DOUBLE OVEN MODELS

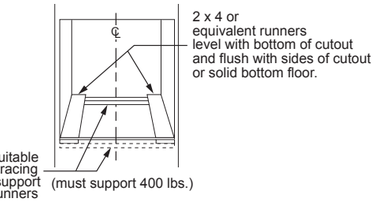

Above illustrations intended for dimensional reference only.
Refer to photography for actual product appearance.

24" BUILT-IN DOUBLE OVEN

		GE
		JRP28SK JRP28BJ
FEATURES & CONTROLS		
Capacity (cu. ft.)		2.7/2.7
Oven	Upper	Traditional
	Lower	Traditional
Self-clean		Upper
Standard clean		Lower
Delay clean option		Variable (upper)
Thermal Bake		●
Thermal Broil		●
Variable broil/Four-pass broil		Upper
Control type		Electronic touch
Temperature display		Upper
Delay bake option		●
°C and °F programmable		●
Audible preheat signal		●
Auto oven shut-off with override		●
Electronic clock and kitchen timer		●
Control lock capability		●
Certified Sabbath mode		●
Oven light		●
Oven racks		2 upper/2 lower
Rack positions		4 upper/4 lower
APPEARANCE		
Color appearance*		SS BB
Frameless oven doors		SS Black glass
Oven door with window		Big view
Handle color*		SS CM
Handle design		Designer-style
Oven interior		Black
WEIGHTS & DIMENSIONS		
Approx. shipping weight (lbs.)		176
Oven cabinet width required (in.)		24
Overall dimensions, including handle (WxHxD in inches)		23-3/4 x 48-5/8 x 23-1/8
Overall oven interior dimens. (WxHxD in inches)	Upper	17 x 15 x 18-1/2
	Lower	17 x 15 x 18-1/2
POWER/RATINGS		
KW rating @	240V	7.1
	208V	5.3
Amps @	240V	30
	208V	30
Broiler wattage		3,400
Bake wattage		2,600

*SS = Stainless, BB = Black on black, CM = Color-matched.

24" BUILT-IN DOUBLE OVEN DIMENSIONS (IN INCHES) MODEL JRP28

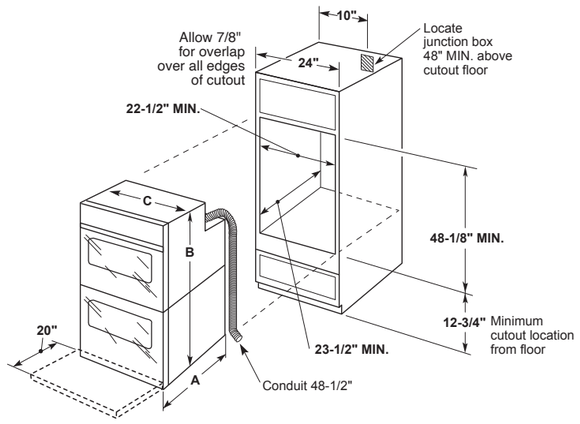

OVEN SUPPORT FOR 24" DOUBLE OVEN MODELS

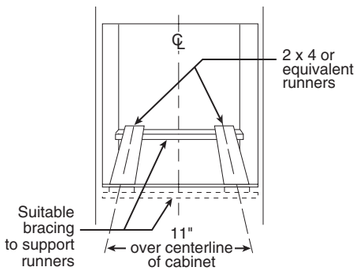

(Must support 275 lbs.)

Above illustrations intended for dimensional reference only.
Refer to photography for actual product appearance.

30" BUILT-IN COMBINATION DOUBLE OVENS

		GE PROFILE™		GE
		PT9800SH	PT7800SH PT7800EK PT7800DH	JT3800SH JT3800DH
FEATURES & CONTROLS				
Capacity (cu. ft.)		1.7/5.0	1.7/5.0	1.7/5.0
Oven	Upper	Advantium®	Convection Microwave	Microwave
	Lower	Convection	Convection	Traditional
Self-clean oven with Steam Clean option		Lower	Lower	Lower
Delay clean option		Variable	Variable	Variable
Advantium oven		Upper		
Speedcook 120V		up to 4 times		
Convection oven		250°–450°		
Microwave oven		Upper		
Warming		Upper		
Proofing		Upper		
Microwave oven			Upper	Upper
Convection bake			●	
Microwave cooking timer			●	●
Microwave power levels			10	10
Sensor functions			Upper	Upper
Microwave oven power output watts			1,000	1,000
16" turntable		●	●	●
True European Convection		Lower	Lower	
Convection Bake multi/single rack		Lower	Lower	
Convection Roast		Lower	Lower	
Convection Broil		Lower		
Thermal Bake		Lower	Lower	Lower
Thermal Broil		Lower	Lower	Lower
Ten-pass bake element		Lower	Lower	Lower
Eight-pass broil element		Lower	Lower	Lower
Control type		Dial & Glass touch	Dial & Glass touch	Dial & Glass touch
Preprogrammed menu items		Lower	Lower	
Auto Recipe Conversion		Lower	Lower	Lower
Defrost mode		Lower	Lower	Lower
Proof mode		Lower	Lower	
Oven meat probe		Lower	Lower	
Warm mode		Lower	Lower	Lower
Temperature display		Lower	Lower	Lower
Delay bake option		Lower	Lower	Lower
°C and °F programmable		Lower	Lower	Lower
Audible preheat signal		Lower	Lower	Lower
Auto oven shut-off with override		Lower	Lower	Lower
Electronic clock and kitchen timer		Lower	Lower	Lower
Control lock capability		Lower	Lower	Lower
Certified Sabbath mode		Lower	Lower	Lower
Halogen interior oven light		Lower	Lower	Lower
Self-clean oven racks		Lower	Lower	Lower
Heavy-duty oven racks		2, 1 roller rack	2, 1 roller rack	3
Rack positions		6-ladder rack lower	6-ladder rack lower	6 lower
APPEARANCE				
Color appearance		SS	SS ES WW, BB	SS BB
Frameless oven doors		SS	SS ES CM glass	SS CM glass
Oven door with window		Big view	Big view	Big view
Handle color*		SS	SS ES CM high-gloss	SS BB
Handle design		Designer-style	Designer-style	Designer-style
Oven interior		Black	Black	Black
WEIGHTS & DIMENSIONS				
Approx. shipping weight (lbs.)		215	230	225
Oven cabinet width required (in.)		30	30	30
Overall dimensions, including handle (WxHxD in inches)		29-3/4 x 43-3/8 x 26-3/4	29-3/4 x 43-3/8 x 26-3/4	29-3/4 x 43-3/8 x 26-3/4
Overall oven interior dimensions (WxHxD in inches)	Upper	20-1/16 x 8-1/2 x 17	20-1/16 x 8-1/2 x 17	20-1/16 x 8-1/2 x 17
	Lower	25 x 17-3/8 x 20-1/4	25 x 17-3/8 x 20-1/4	25 x 17-3/8 x 20-1/4
POWER/RATINGS				
KW rating @	240V	7.6	7.2	7.2
	208V	5.7	5.4	5.4
Amps @	240V	30	30	30
	208V	30	30	30
Convection wattage		2,400	2,400	
Microwave wattage		1,000	1,000	1,000
Broiler wattage		3,400	3,400	3,400
Bake wattage		2,850	2,850	2,850

*SS = Stainless, ES = Slate, WW = White on white, BB = Black on black, CM = Color-matched.

30" BUILT-IN COMBINATION DOUBLE OVEN DIMENSIONS (IN INCHES) MODELS PT9800, PT7800, JT3800

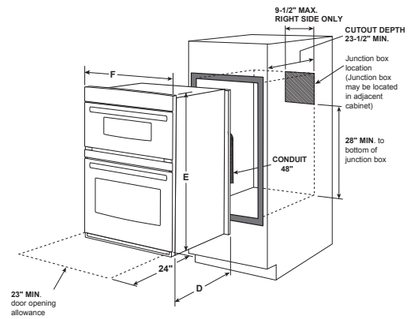

CABINET	PT9800 PT7800 JT3800
A – Overlap of oven at top of cutout	1"
B – Overlap of oven other side of edge of cutout	3/4"
C – Overlap of oven at bottom of cutout	1"
OVEN	
D – Install depth	23-1/2"
E – Overall height with trim	43-3/8"
F – Overall width	29-3/4"

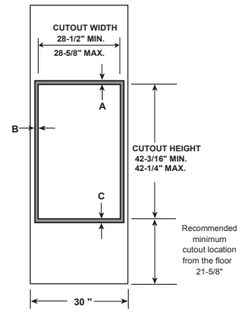

Note: Cabinets installed adjacent to wall ovens must have an adhesion spec of at least a 194°F temperature rating.

Note: If marks, blemishes or the cutout opening are visible above the installed oven, it may be necessary to add wood shims under the runners and front trim until the marks or openings are covered.

Note: Door handle protrudes 3" from door face. Cabinets and drawers on adjacent 45° and 90° walls should be placed to avoid interference with the handle.

OVEN SUPPORT FOR 30" COMBINATION DOUBLE OVEN MODELS

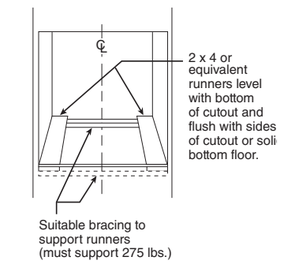

Most 30" wall cabinets can be used with this unit. The opening between the inside walls must be at least 28-1/2" wide.

Electric wall ovens are not approved for installation with a plug and receptacle. They must be hard wired in accordance with installation instructions.

Installation information: Before installing, consult installation instructions packed with product for current dimensional data.

Above illustrations intended for dimensional reference only.
Refer to photography for actual product appearance.

27" BUILT-IN COMBINATION DOUBLE OVENS

		GE PROFILE™ PK7800SK PK7800EK	GE JK3800SH JK3800DH
FEATURES & CONTROLS			
Capacity (cu. ft.)		1.7/4.3	1.7/4.3
Oven	Upper	Convection Microwave	Microwave
	Lower	True European Convection	Traditional
Self-clean oven with Steam Clean option		Lower	Lower
Delay clean option		Lower	Variable
Microwave oven		Upper	Upper
Microwave cooking timer		●	●
Convection bake		Lower	
Microwave power levels		10	10
Sensor functions		Upper	Upper
Microwave oven power output watts		1,000	1,000
16" turntable		●	●
Convection Bake multi/single rack		Lower	
Thermal Bake		Lower	
Convection Roast		Lower	Lower
Thermal Broil		Lower	Lower
Ten-pass bake element		Lower	Lower
Eight-pass broil element		Lower	Lower
Control type		Dial & Glass touch	Dial & Glass touch
Auto Recipe Conversion		Lower	
Defrost mode		Lower	
Warm mode		Lower	Lower
Proof mode		Lower	
Temperature display		Lower	Lower
Delay bake option		Lower	Lower
°C and °F programmable		Lower	Lower
Audible preheat signal		Lower	Lower
Auto oven shut-off with override		Lower	Lower
Electronic clock and kitchen timer		Lower	Lower
Control lock capability		Lower	Lower
Certified Sabbath mode		Lower	Lower
Halogen interior oven light		Lower	Lower
Self-clean oven racks		Lower	Lower
Oven racks		2, 1 roller	3 heavy-duty
Rack positions		6-ladder rack lower	6 lower
APPEARANCE			
Color appearance*		SS ES	SS WW, BB
Frameless oven doors		SS CM glass	SS CM glass
Oven door with window		Big view	Big view
Handle color*		SS	SS CM
Handle design		Designer-style	Designer-style
Oven interior		Black	Black
WEIGHTS & DIMENSIONS			
Approx. shipping weight (lbs.)		192	192
Oven cabinet width required (in.)		27	27
Overall dimensions, including handle (WxHxD in inches)		26-3/4 x 42-3/8 x 26-7/8	26-3/4 x 42-3/8 x 26-7/8
Overall oven interior dimens. (WxHxD in inches)	Upper	20-1/16 x 8-1/2 x 17	20-1/16 x 8-1/2 x 17
	Lower	21-1/2 x 17-1/4 x 20	21-1/2 x 17-1/4 x 20
POWER/RATINGS			
KW rating @	240V	7.2	6.4
	208V	5.4	5.6
Amps @	240V	30	30
	208V	30	30
Convection wattage		2,400	
Broiler wattage		3,400	3,400
Bake wattage		2,600	2,600
Microwave wattage		1,000	1,000

*SS = Stainless, ES = Slate, WW = White on white, BB = Black on black, CM = Color-matched.

Electric wall ovens are not approved for installation with a plug and receptacle. They must be hard wired in accordance with installation instructions.

Installation information: Before installing, consult installation instructions packed with product for current dimensional data.

27" BUILT-IN COMBINATION DOUBLE OVEN DIMENSIONS (IN INCHES)
MODELS PK7800, JK3800

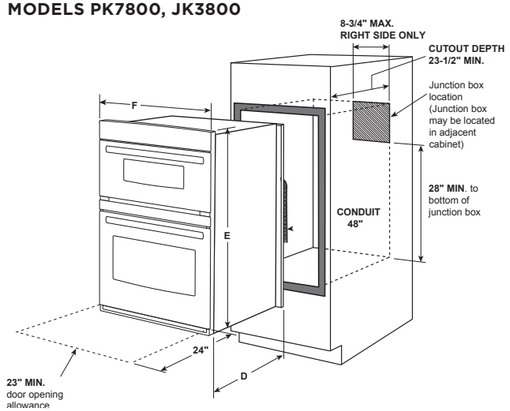

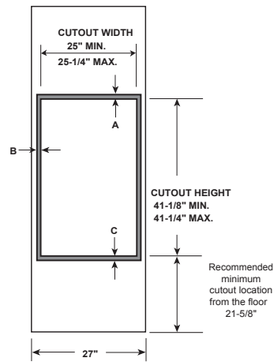

Note: Door handle protrudes 3" from door face. Cabinets and drawers on adjacent 45° and 90° walls should be placed to avoid interference with the handle.

Note: Cabinets installed adjacent to wall ovens must have an adhesion spec of at least a 194°F temperature rating.

Note: If marks, blemishes or the cutout opening are visible above the installed oven, it may be necessary to add wood shims under the runners and front trim until the marks or openings are covered.

OVEN SUPPORT FOR 27" COMBINATION DOUBLE OVEN MODELS

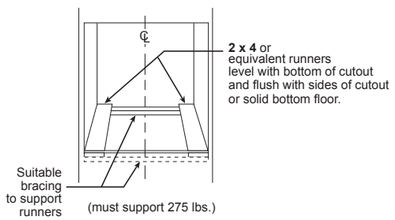

Above illustrations intended for dimensional reference only. Refer to photography for actual product appearance.

See page 274 for warranty information.

30" BUILT-IN SINGLE OVENS

	GE PROFILE PTS9000SN PTS9000BN	GE PROFILE PTS7000SN PTS7000BN	GE PROFILE PTS700LSN PTS700RSN	GE JTS5000SN JTS5000EN JTS5000FN JTS5000DN	GE JTS3000SN JTS3000EN JTS3000DN
UFAS/ADA compliant	●	●		●	●
FEATURES & CONTROLS					
Total oven capacity (cu. ft.)	5.0	5.0	5.0	5.0	5.0
Oven cooking technology	Convection	Convection	Convection	Convection	Traditional
Self-clean oven with Steam Clean option	●	●	●	●	●
Delay clean option	Variable	Variable	Variable	Variable	Variable
Automatic self-clean oven door lock	●	●	●	●	●
True European Convection	●	●	●	●	
Direct Air	●	●	●		
Convection Bake multi/single rack	●	●	●		
Convection Roast	●*	●*	●*	●	
Convection Broil	●*	●*	●*		
Convection Bake	●	●	●		
Thermal Bake	●	●	●	●	●
Thermal Broil	●	●	●	●	●
Precision Cooking	●*	●*	●*		
Voice control	●*	●*	●*	●	●
Dehydrate	●*	●*	●*		
No-preheat air fry	●*	●*	●*		
In-oven CookCam™	●*				
Ten-pass bake element	●	●	●	●	●
Ten-pass dual broil element	●	●	●		
Eight-pass broil element				●	●
Hidden bake oven interior	●	●	●	●	●
Control type	7" full-color LCD touch screen	7" full-color LCD touch screen	7" full-color LCD touch screen	Hidden backlit LCD	Glass touch
WiFi Connect	●*	●*	●*	●	●
Scan-to-Cook technology	●*	●*	●*	●	●
Auto Recipe Conversion	●	●	●	●	
Proof mode	●	●	●	●	●
Oven meat probe	●*	●	●	●	
Warm mode	●	●	●	●	●
Temperature display	●	●	●	●	●
Delay bake option	●	●	●	●	●
°C and °F programmable	●	●	●	●	●
Audible preheat signal	●	●	●	●	●
Auto oven shut-off with override	●	●	●	●	●
Electronic clock and kitchen timer	●	●	●	●	●
Control lock capability	●	●	●	●	●
Halogen interior oven lighting	●	●	●	●	●
Certified Sabbath mode	●	●	●	●	●
Never-Scrub oven racks	●	●	●	●	●
Heavy-duty oven racks	2 roller rack	1, 1 roller rack	1, 1 roller rack	1, 1 roller rack	2
Rack positions	6 embossed	6 embossed	3 embossed	6 embossed	6 embossed
APPEARANCE					
Color appearance**	SS TS	SS TS	SS SS	SS ES DS WW, BB	SS ES WW, BB
Handle color**	SS TS	SS TS	SS SS	SS ES DS WW, BB	SS SS WW, BB
Handle design	Designer-style	Designer-style	Designer-style	Designer-style	Designer-style
Door swing			Left-swing Right-swing		
Oven interior	Black gloss	Black gloss	Black gloss	Black gloss	Black gloss
WEIGHTS & DIMENSIONS					
Approx. shipping wt. (lbs.)	177	151	177	151	136
Oven cabinet width required (in.)	30	30	30	30	30
Overall dimensions, including handle (WxHxD in inches)	29-3/4 x 28-3/8 x 26-3/4	29-3/4 x 28-5/8 x 26-3/4	29-3/4 x 28-5/8 x 26-3/4	29-3/4 x 28-5/8 x 26-3/4	29-3/4 x 28-5/8 x 26-3/4
Overall oven interior dimensions (WxHxD in inches)	25 x 17-3/8 x 20-1/4	25 x 17-3/8 x 20-1/4	25 x 17-3/8 x 20-1/4	25 x 17-3/8 x 20-1/4	25 x 17-3/8 x 20-1/4
POWER/RATINGS					
KW rating @ 240V	4.2	4.2	4.2	4.2	4.2
KW rating @ 208V	3.2	3.2	3.2	3.2	3.2
Amps @ 240V	20	20	20	20	20
Amps @ 208V	20	20	20	20	20
Convection wattage	2,400	2,400	2,400	2,400	
Broiler wattage	1,700/1,050	3,300/1,000	3,300/1,000	4,000	4,000
Bake wattage	2,850	2,850	2,850	2,850	2,850

*WiFi-enabled feature.
**SS = Stainless, TS = Black Stainless, ES = Slate, DS = Black Slate, WW = White on white, BB = Black on black.

Listed by Underwriters Laboratories

Electric wall ovens are not approved for installation with a plug and receptacle. They must be hard wired in accordance with installation instructions.

Note: See following page for installation drawings.

See page 274 for warranty information.

30" BUILT-IN SINGLE OVENS

30" BUILT-IN SINGLE OVEN DIMENSIONS (IN INCHES)
MODELS PTS9000, PTS7000, JTS5000, JTS3000

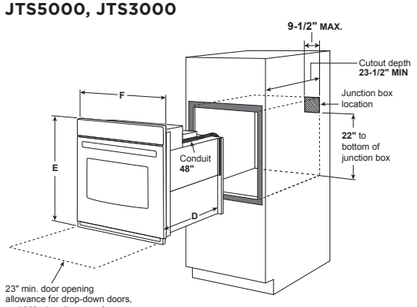

OVEN	PTS7000, JTS5000, JTS3000
D – Install depth	23-1/2"
E – Overall height with trim	28-5/8"
F – Overall width	29-3/4"

30" BUILT-IN TWIN FLEX OVEN DIMENSIONS (IN INCHES)
MODELS PT9200, PTS9200

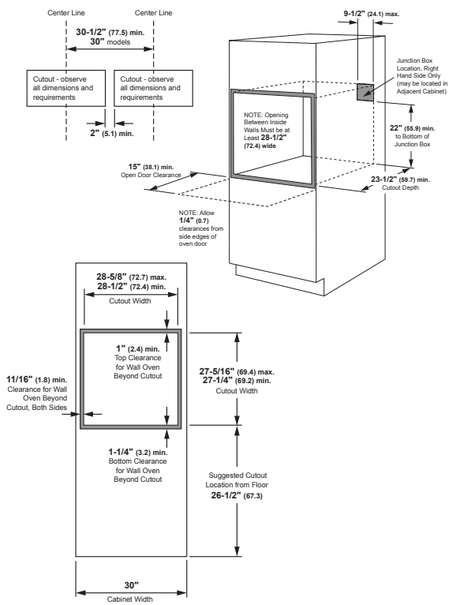

Note: Gas, electronic touch and electric coil cooktops cannot be installed over the PT9200 due to the top of the oven preventing the cooktop from fitting into place.

Most 30" wall cabinets can be used with this unit.

Note: These ovens are not approved for stackable installation.

Note: Cabinets installed adjacent to wall ovens must have an adhesion spec of at least a 194°F temperature rating.

Note: Door handle protrudes 3" from door face. Cabinets and drawers on adjacent 45° and 90° walls should be placed to avoid interference with the handle.

Above illustrations intended for dimensional reference only. Refer to photography for actual product appearance.

MODEL PTS700L

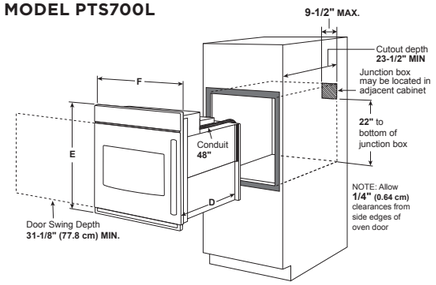

MODEL PTS700R

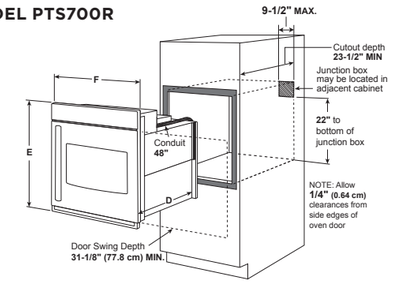

UNDERCOUNTER INSTALLATION DIMENSIONS (IN INCHES)
MODELS PTS7000, PTS9000, JTS5000, JTS3000

Note: 36" ribbon cooktops are approved for use over GE 30" single wall ovens and warming drawers. 30" ribbon cooktops are approved for use over GE 30" and GE 27" single wall ovens and warming drawers. Refer to cooktop and wall oven installation information packed with products for current dimensional data.

Note: Door handle protrudes 3" from door face. Cabinets and drawers on adjacent 45° and 90° walls should be placed to avoid interference with the handle.

Installation information: Before installing, consult installation instructions packed with product for current dimensional data and for alternate installation options.

Gas or electric cooktops may be installed over this oven. See cooktop installation instructions for cutout size. See label on top of oven for approved cooktop models.

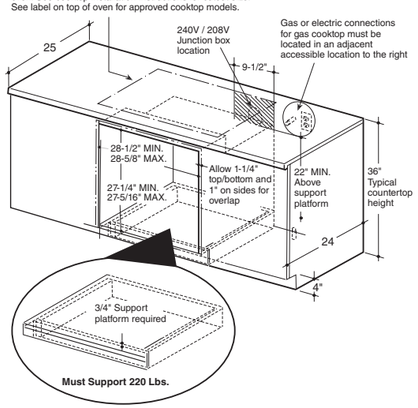

OVEN SUPPORT FOR 30" SINGLE OVEN MODELS

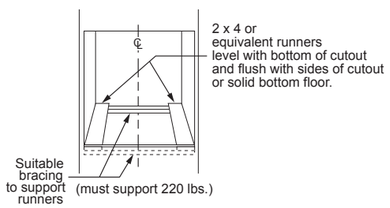

IMPORTANT: Maintain a minimum distance of 31-1/4" from the top surface of the countertop to the wall oven platform to ensure that the cooktop and wall oven do not interfere with each other (see picture).

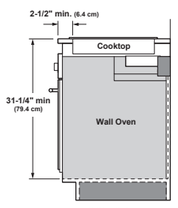

See page 274 for warranty information.

27" BUILT-IN SINGLE OVENS

	GE PROFILE™	GE	
	PKS7000SN PKS7000BN	JKS5000SN JKS5000EN JKS5000DN	JKS3000SN JKS3000DN
UFAS/ADA compliant	●	●	●
FEATURES & CONTROLS			
Total oven capacity (cu. ft.)	4.3	4.3	4.3
Oven cooking technology	Convection	Convection	Traditional
Self-clean oven with Steam Clean option	●	●	●
Delay clean option	Variable	Variable	Variable
Automatic self-clean oven door lock	●	●	●
True European Convection	●	●	
Convection Bake multi/ single rack	●	●	
Convection Roast	●*	●	
Convection Broil	●*		
Convection Bake	●		
Thermal Bake	●	●	●
Thermal Broil	●	●	●
Ten-pass bake element	●	●	●
Eight-pass broil element	●	●	●
Hidden bake oven interior	●	●	●
Control type	7" full-color LCD touch screen	Hidden backlit LCD	Glass touch
WiFi Connect	●*	●	●
Voice control	●*	●	●
Scan-to-Cook technology	●*	●	●
Auto Recipe Conversion	●	●	
Proof mode	●	●	●
Oven meat probe	●	●	
Warm mode	●	●	●
Temperature display	●	●	●
Delay bake option	●	●	●
°C and °F programmable	●	●	●
Audible preheat signal	●	●	●
Auto oven shut-off with override	●	●	●
Electronic clock and kitchen timer	●	●	●
Control lock capability	●	●	●
Halogen interior oven lighting	●	●	●
Certified Sabbath mode	●	●	●
Never-Scrub oven racks	●	●	●
Heavy-duty oven racks	1, 1 roller rack	1, 1 roller rack	2
Rack positions	6 embossed	6 embossed	6 embossed
APPEARANCE			
Color appearance**	SS TS	SS ES WW, BB	SS WW, BB
Handle color**	SS TS	SS SS WW, BB	SS WW, BB
Handle design	Designer-style	Designer-style	Designer-style
Oven interior	Black gloss	Black gloss	Black gloss
WEIGHTS & DIMENSIONS			
Approx. shipping wt. (lbs.)	134	134	128
Oven cabinet width required (in.)	27	27	27
Overall dimensions, including handle (WxHxD in inches)	26-3/4 x 28-3/4 x 26-5/8	26-3/4 x 28-3/4 x 26-5/8	26-3/4 x 28-3/4 x 26-5/8
Overall oven interior dimensions (WxHxD in inches)	21-1/2 x 17-1/4 x 20	21-1/2 x 17-1/4 x 20	21-1/2 x 17-1/4 x 20
POWER/RATINGS			
KW rating @ 240V	3.6	3.6	3.6
KW rating @ 208V	2.7	2.7	2.7
Amps @ 240V	20	20	20
Amps @ 208V	20	20	20
Convection wattage	2,400	2,400	
Broiler wattage	3,400	3,400	3,400
Bake wattage	2,600	2,600	2,600

*WiFi-enabled feature.
**SS = Stainless, TS = Black Stainless, ES = Slate, DS = Black Slate, WW = White on white, BB = Black on black.

Electric wall ovens are not approved for installation with a plug and receptacle. They must be hard wired in accordance with installation instructions.

Above illustrations intended for dimensional reference only. Refer to photography for actual product appearance.

27" BUILT-IN SINGLE OVEN DIMENSIONS (IN INCHES)
MODELS PKS7000, JKS5000, JKS3000

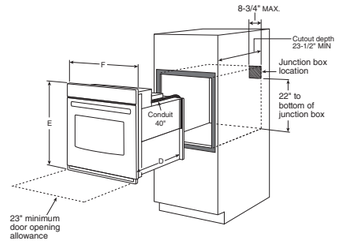

CABINET	PKS7000, JKS5000, JKS3000
A – Overlap of oven at top of cutout	1"
B – Overlap of oven other side of edge of cutout	1"
C – Overlap of oven at bottom of cutout	1"
OVEN	
D – Overall depth	23-1/2"
E – Overall height with trim	28-7/8"
F – Overall width	26-3/4"

OVEN SUPPORT FOR 27" SINGLE OVEN MODELS

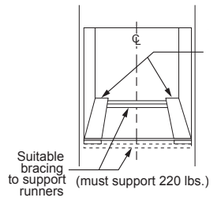

Note: These ovens are not approved for stackable installations.

UNDERCOUNTER INSTALLATION DIMENSIONS (IN INCHES)
MODELS PKS7000, JKS5000, JKS3000

Gas or electric cooktops may be installed over this oven. See cooktop installation instructions for cutout size. See label on top of oven for approved cooktop models.

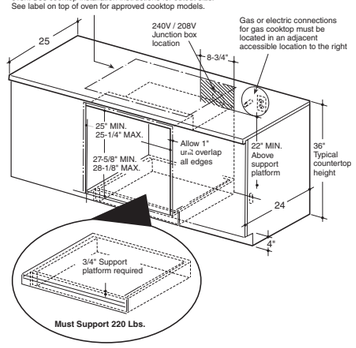

Note: Door handle protrudes 3" from door face. Cabinets and drawers on adjacent 45° and 90° walls should be placed to avoid interference with the handle.

Note: Cabinets installed adjacent to wall ovens must have an adhesion spec of at least a 194°F temperature rating.

Note: For 27" built-in single ovens, if marks, blemishes or the cutout opening are visible above the installed oven, it may be necessary to add wood shims under the runners and front trim until the marks or openings are covered.

Note: 36" ribbon cooktops are approved for use over GE 30" single wall ovens and warming drawers. 30" ribbon cooktops are approved for use over GE 30" and GE 27" single wall ovens and warming drawers. Refer to cooktop and wall oven installation information packed with products for current dimensional data.

Note: Oven is rated for use only under GE 30" standard or sealed burner gas and selected GE 30" smoothtop and Calrod® electric cooktops.

Installation information: Before installing, consult installation instructions packed with product for current dimensional data.

See page 274 for warranty information.

24" BUILT-IN SINGLE OVENS

	GE	
	JRP20SK JRP20WJ JRP20BJ	JRS06SK JRS06BJ
FEATURES & CONTROLS		
Capacity (cu. ft.)	2.7	2.7
Oven	Self-clean	Standard-clean
Cleaning time	Variable	
Self-clean oven with delay clean option	●	
Automatic self-clean oven door lock	●	
Variable broil/Four-pass broil	●	●
Control type	Electronic touch	Electronic touch
Temperature display	●	●
Delay bake option	●	●
°C and °F programmable	●	●
Audible preheat signal	●	●
Auto oven shut-off with override	●	●
Electronic clock and kitchen timer	●	●
Control lock capability	●	●
Oven light	●	●
Certified Sabbath mode	●	●
Oven racks	2	2
Rack positions	4	4
APPEARANCE		
Color appearance*	SS WW BB	SS BB
Frameless oven doors	SS CM glass	SS CM glass
Oven door with window	Clear view	Clear view
Handle color*	SS CM	SS CM
Handle design	D-shaped	D-shaped
WEIGHTS & DIMENSIONS		
Approx. shipping weight (lbs.)	113	95
Oven cabinet width required (in.)	24	24
Overall dimensions (WxHxD in inches)	23-3/4 x 28-3/16 x 23-1/8	23-3/4 x 28-3/16 x 23-1/8
Overall oven interior dimensions (WxHxD in inches)	17 x 15 x 18-1/2	17 x 15 x 18-1/2
POWER/RATINGS		
KW rating @ 240V	3.4	3.4
KW rating @ 208V	2.6	2.6
Amps @ 240V	20	20
Amps @ 208V	20	20
Broiler wattage	3,400	3,400
Bake wattage	2,650	2,000

*SS = Stainless, WW = White on white, BB = Black on black, CM = Color-matched.

24" BUILT-IN SINGLE OVEN DIMENSIONS (IN INCHES)
MODEL JRS06

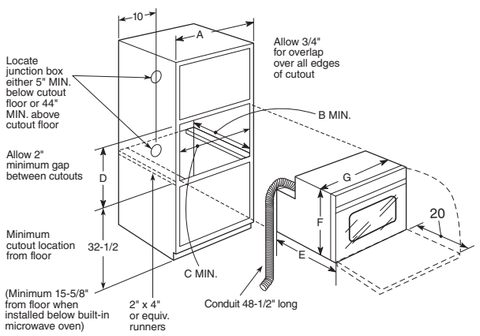

CABINET		JRS06
A—Cabinet width required		24" min.
B—Minimum cabinet depth		23-1/2"
C—Opening width		22-1/2"
D—Opening height		27-5/8" min.
OVEN		
E—Install depth	without handle	23-1/8"
	with handle	28-1/8"
F—Overall height	without trim	27-1/2"
	with trim	28-1/4"
G—Overall width		23-3/4"

24" BUILT-IN SINGLE OVEN DIMENSIONS (IN INCHES)
MODEL JR20P

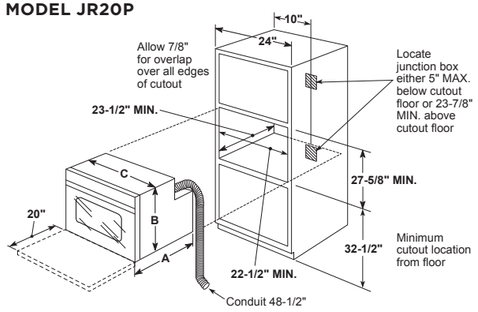

OVEN SUPPORT FOR 24" SINGLE ELECTRIC OVEN MODELS JRP20 AND JRP06

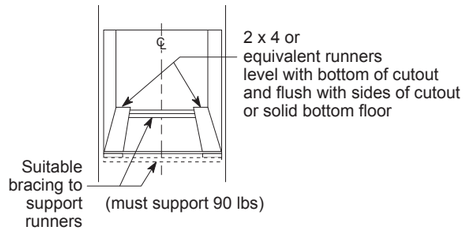

OVEN SUPPORT FOR 24" GAS OVEN MODELS

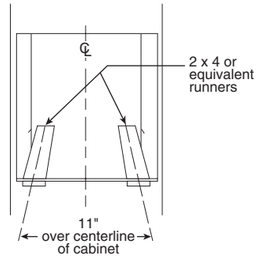

(Must support 130 lbs.)

Note: Door handle protrudes 3" from door face. Cabinets and drawers on adjacent 45° and 90° walls should be placed to avoid interference with the handle.

Installation information: Before installing, consult installation instructions packed with product for current dimensional data.

Above illustrations intended for dimensional reference only. Refer to photography for actual product appearance.

24" BUILT-IN GAS OVENS

	GE
	JGRP20SEN JGRP20WEJ JGRP20BEJ
FEATURES & CONTROLS	
Oven capacity (cu. ft.)	2.7
Oven interior	Self-clean
Automatic self-clean oven door lock	●
Certified Sabbath mode	●
Delay clean option	●
In-oven broiling	●
Storage drawer	●
Electronic controls	●
Temperature display	●
Start pad	●
Delay bake option with cook & hold	●
°C and °F programmable	●
Audible preheat signal	●
Auto oven shut-off with override	●
Electronic clock and kitchen timer	●
Control lock capability	●
Oven light pad	●
Certified Sabbath mode	●
Oven racks	2
Electronic pilotless ignition	●
APPEARANCE	
Color appearance*	SS WW BB
Frameless oven door	SS CM glass CM glass
Oven door with window	●
Handle color*	SS CM high gloss CM high gloss
Handle design	D-shaped
WEIGHTS & DIMENSIONS	
Approx. shipping wt. (lbs.)	152
Oven cabinet width required (in.)	24
Overall dimensions (WxHxD in inches)	23-3/4 x 38-3/4 x 25-3/8
Overall oven interior dimensions (WxHxD in inches)	17 x 15 x 18-7/8
POWER/RATINGS	
Gas oven electrical rating	120V, 60Hz, 5A
Broiler/Bake wattage (000s BTUs) Natural Gas/LP Gas**	13.0/13.0

*SS = Stainless, WW = White on white, BB = Black on black, CM = Color-matched.
**Factory set for natural gas. A set of LP orifices is included with each oven for LP conversion.

24" BUILT-IN GAS OVEN DIMENSIONS (IN INCHES)

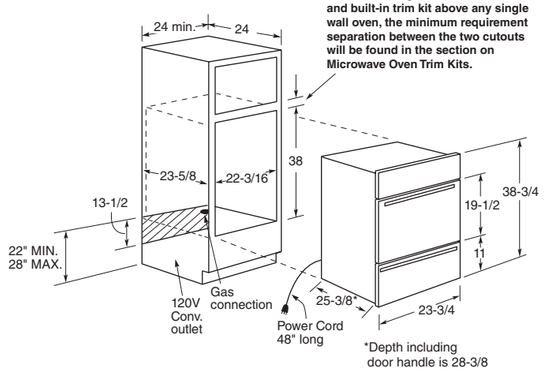

Note: These ovens are not approved for stackable or side-by-side installations.

Note: Door handle protrudes 3" from door face. Cabinets and drawers on adjacent 45° and 90° walls should be placed to avoid interference with the handle.

Note: Cabinets installed adjacent to wall ovens must have an adhesion spec of at least a 194°F temperature rating.

Listed by Underwriters Laboratories

Above illustrations intended for dimensional reference only. Refer to photography for actual product appearance.

30" BUILT-IN TWIN FLEX WALL OVEN

		GE PROFILE™
		PTS9200SN
ADA compliant		●
FEATURES & CONTROLS		
Oven capacity (cu. ft.)		2.2/2.8 (5.0 total)
Oven cooking technology	Upper	Traditional
	Lower	Convection
Self-clean oven with Steam Clean option		●
Delay clean option		Variable
Automatic self-clean oven door lock		●
True European Convection with Precise Air		●
Convection Roast		Lower*
Convection Bake multi-rack		Lower
Thermal Bake		●
Thermal Broil		●
Eight-pass bake element		●
Eight-pass dual broil element		Lower
Six-pass dual broil element		Upper
Hidden bake oven interior		●
Control type		7" full-color LCD touch screen
WiFi Connect		●*
Scan-to-Cook technology		●*
Voice control		●*
Auto Recipe Conversion		Lower
Proof mode		Lower
Oven meat probe		Lower
Warm mode		●
Temperature display		●
Delay bake option		●
°C and °F programmable		●
Audible preheat signal		●
Auto oven shut-off with override		●
Electronic clock and kitchen timer		●
Control lock capability		●
Halogen interior lighting		●
Certified Sabbath mode		●
Never-Scrub oven racks		●
Heavy-duty oven racks		1, 2 roller racks
Rack positions		5 embossed (2 upper / 3 lower)
APPEARANCE		
Color appearance**		SS
Handle color**		SS
Handle design		Designer-style
Oven interior		Black gloss
WEIGHTS & DIMENSIONS		
Approx. shipping wt. (lbs.)		212
Oven cabinet width required (in.)		30
Overall dimensions, including handle (WxHxD in inches)		29-3/4 x 27-13/16 x 23-5/16
Overall oven interior (WxHxD in inches)	Upper	24 x 8-3/4 x 17-7/8
	Lower	24 x 12-1/2 x 16
POWER/RATINGS		
KW rating @ 240V		4.2
KW rating @ 208V		3.2
Amps @ 240V		20
Amps @ 208V		20
Convection wattage		1,300
Broiler wattage	Upper	1,700/1,050
	Lower	2,950
Bake wattage	Upper	1,700
	Lower	2,200

*WiFi-enabled feature.
**SS = Stainless.

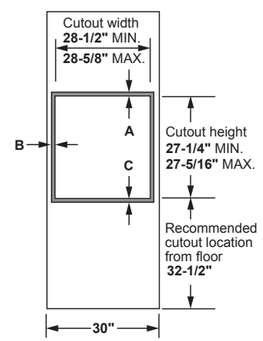

30" AND 27" BUILT-IN WARMING DRAWERS*

	GE PROFILE™	
	PTW9000SP	PKW7000SP
UFAS/ADA compliant**	●	●
FEATURES & CONTROLS		
Capacity (cubic feet)	1.9	1.67
Control location	Hidden	Hidden
Operation	On/Off rocker switch	On/Off rocker switch
Indicator light	"On"	"On"
Temperature control	Rotary knob	Rotary knob
Proof temperature (°F)	75-95	75-95
Low temperature (°F)	140-160	140-160
Medium temperature (°F)	160-195	160-195
High temperature (°F)	195-230	195-230
Variable-humidity control	Crisp/Moist	Crisp/Moist
Rack configuration	Half rack	Half rack
Drawer glide	Full-extension, ball-bearing glides	Full-extension, ball-bearing glides
APPEARANCE		
Color appearance***	SS	SS
Drawer front***	SS	SS
Handle color***	SS	SS
Handle design	Designer-style	Designer-style
WEIGHTS & DIMENSIONS		
Approx. shipping wt. (lbs.)	65	59
Net weight (lbs.)	59	53
Cabinet width compatibility (in.)	30	27
Interior dimensions (WxHxD in inches)	23-7/8 x 6-1/4 x 22-1/16	20-7/8 x 6-1/4 x 22-1/16
Exterior dimensions (WxHxD in inches)	29-3/4 x 10-1/2 x 23-1/4	26-3/4 x 10-1/2 x 23-3/4
Cutout dimensions (WxHxD in inches)	28-1/2 x 9-1/4 x 23-1/2	25-1/2 x 9-1/4 x 23-1/2
POWER/RATINGS		
Amp rating @ 120V/60Hz	15	15
Element power (watts)	450	450
Power cord length (in.)	56	56
Outlet type	3-prong grounded	3-prong grounded
ACCESSORIES		
Custom panel kit†	ZXD30B	

*See page 71 for match recommendations.
**ADA-compliant when installed so the bottom of the drawer is 15"–38" from the floor.
***SS = Stainless.
†Custom panel will not be flush with adjacent cabinetry drawers and doors.

Listed by Underwriters Laboratories

UNDERCOUNTER INSTALLATION DIMENSIONS (IN INCHES) MODELS PTW9000, AND PKW7000

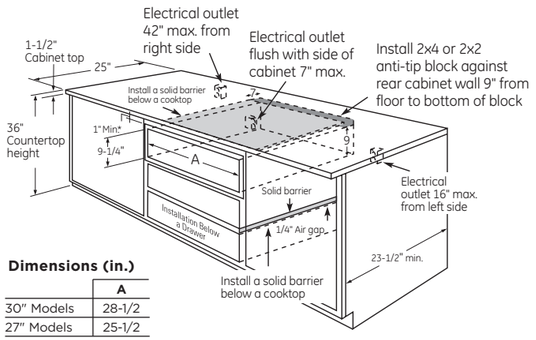

Dimensions (in.)

	A
30" Models	28-1/2
27" Models	25-1/2

Note: When installing the warming drawer below a cooktop, a solid barrier must be installed at least 1" from the lowest point of the bottom of cooktop burner box to the top of the cutout. Use any solid material such as 1/4"-thick plywood. Allow at least 1/4" air gap between the barrier and the top of the warming drawer. See label on top of the warming drawer for approved cooktop models.

Note: Door handle protrudes 3" from door face. Cabinets and drawers on adjacent 45° and 90° walls should be placed to avoid interference with the handle.

Installation information: Before installing, consult installation instructions packed with product for current dimensional data.

Note: Use of drawer with ZXD30B custom panel kit will result in the panel not being flush with adjacent cabinet doors and drawers.

INSTALLATION BELOW A SINGLE OR DOUBLE WALL OVEN (IN INCHES) MODELS PTW9000, PW9000, PKW7000 AND PJ7000

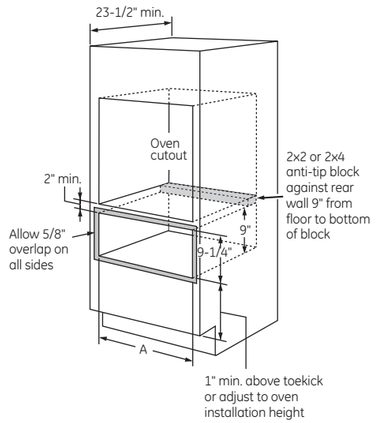

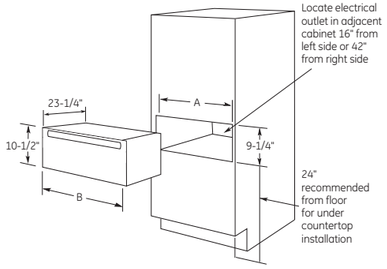

Dimensions (in inches)

	A	B
30" Models	28-1/2	29-3/4
27" Models	25-1/2	26-3/4

Note: Additional clearance between cutouts may be required. Check to be sure that oven supports above the warming drawer location do not obstruct the required interior 23-1/2" depth and 9-1/4" height.

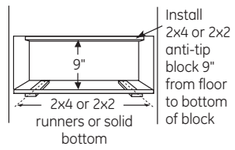

(Must support 150 lbs.)

When installed under a cooktop:

Warming drawers are suitable for installation below only certain specified cooktop models. See the label attached to the top of the warming drawer for suitable models. A solid barrier and air gap between cooktop and warming drawer are required.

Above illustrations intended for dimensional reference only. Refer to photography for actual product appearance.

30" AND 27" BUILT-IN ADVANTIUM® WALL OVENS

		GE PROFILE		
		PSB9240SF PSB9240BL PSB9240EF	PSB9120SF PSB9120BL PSB9120EF	PSB9100SF PSB9100BL PSB9100EF
UL® Certified		●	●	●
FEATURES & CONTROLS				
Family-size oven		1.7 cu. ft.	1.7 cu. ft.	1.7 cu. ft.
Stainless steel oven interior		●	●	●
Cooking modes	Speedcook	up to 8 times	up to 4 times	up to 4 times
	Convection oven	250°–450°	250°–450°	250°–450°
	Microwave oven	●	●	●
	Warming	●	●	●
	Proofing	●	●	●
	True European Convection	Multilevel	Multilevel	Multilevel
Oven controls	Controls	Dial & glass touch	Dial & glass touch	Dial & glass touch
	Electronic scrolling display	●	●	●
	Preprogrammed menu items	175	175	175
	Help pad	●	●	●
	Demo mode	●	●	●
	Interior oven light	●	●	●
	Beeper sound level control	4 levels	4 levels	4 levels
	Variable scroll speed	5 speeds	5 speeds	5 speeds
Heating elements	Upper heater power (watts)	2,400	1,200	1,200
	Lower heater power (watts)	500	375	375
	Convection heater power (watts)	1,500	1,500	1,500
Custom Recipe Saver		30	30	30
Cooking complete reminder		●	●	●
Control lockout		●	●	●
Frameless glass oven door with window		●	●	●
Microwave oven features	Sensor	●	●	●
	Defrost—Auto/ Time/ 1-lb. Quick	●	●	●
	Soften/Melt	●	●	●
	Microwave power output watts	950	975	975
27"/30" appearance		30"	30"	27"
Under-the-counter installation			●	
APPEARANCE				
Color appearance*		SS TS ES	SS TS ES	SS TS ES
Handle color*		SS TS SS	SS TS SS	SS TS SS
Handle design		Designer-style	Designer-style	Designer-style
WEIGHTS & DIMENSIONS				
Overall oven interior dimensions (WxHxD in inches)		20-1/8 x 8-1/2 x 17	20-1/8 x 8-1/2 x 17	20-1/8 x 8-1/2 x 17
Overall dimensions (in.)	Exterior width (W)	29-3/4	29-3/4	26-3/4
	Exterior height (H)	19	19	19
	Exterior depth, not including handle (D)	21-1/2	21-1/2	21-1/2
Oven cabinet width required (in.)		30	30	27" minimum
Cutout height		17-1/2	17-1/2	17-1/2
Cutout width		25-1/4	25-1/4	25-1/4
Cutout depth		23-1/2	23-1/2	23-1/2
Approx. shipping weight (lbs.)		115	115	91
POWER/RATINGS				
Input volt/hertz		240V/208V 60Hz	120V/60Hz	120V/60Hz
Input amps/watts (max)		30A/6.3KW-total	15A/1.8KW	15A/1.8KW
ACCESSORIES				
Cookbook		●	●	●
Cooking guide		●	●	●
Grill tray		●		
Cooking tray		●	●	●
Microwave tray		●	●	●
Rack		Full-width	Pedestal	Pedestal
Broil/Toast tray			●	●
Storage drawer		UXB903SNSS Optional	UXB903SNSS Optional	N/A
WARRANTY				
Limited one-year in-home warranty**		●	●	●
Limited five-year magnetron warranty**		●	●	●

*SS = Stainless, TS = Black Stainless, ES = Slate.
**See written warranty for details.

DIMENSIONS AND CABINET INSTALLATION (IN INCHES)

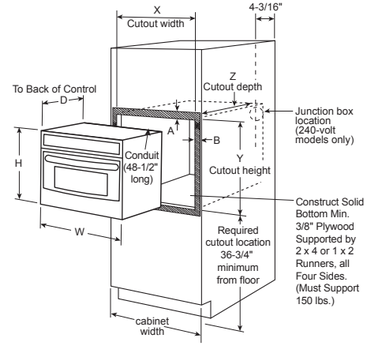

Note: Cabinets installed adjacent to wall ovens must have an adhesion spec of at least 194°F temperature rating.

Note: 2" minimum between cutouts when installed above warming drawer or single wall oven.

A = Allow clearance of 5/8" from the top and 1-1/8" from the bottom.
B = Allow clearance of 2-3/8" from the sides on 30" product and 7/8" for 27" product.

Required for UL® approval on models PSB9240 and PSB9100

Note: PSB9120 may be installed at a minimum of 5" from the floor.

DIMENSIONS AND CABINET INSTALLATION (IN INCHES)

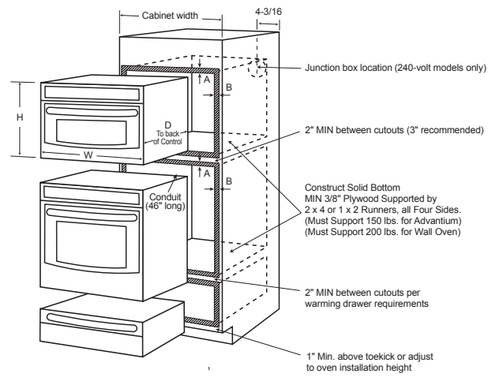

A = Allow clearance of 5/8" from the top and 1-1/8" from the bottom.
B = Allow clearance of 2-3/8" from the sides on 30" product and 7/8" for 27" product.

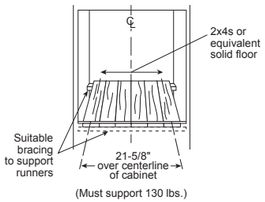

(Must support 130 lbs.)

240-volt electric wall ovens are not approved for installation with a plug and receptacle. They must be hard wired in accordance with installation instructions.

Important: Before installing, consult installation instructions packed with product for current dimensional data.

Note: Cabinets installed adjacent to wall ovens must have an adhesion spec of at least a 194°F temperature rating.

	CABINET WIDTH	W WIDTH	H HEIGHT	D DEPTH (TO BACK OF CONTROL)	X CUTOUT WIDTH	Y CUTOUT HEIGHT	Z CUTOUT DEPTH
PSB9240 and PSB9120 **without** storage drawer	30"	29-3/4"	19"	21-1/2"	25-1/4"	17-1/2"	23-1/2"
PSB9240 and PSB9120 **with** storage drawer	30"	29-3/4"	22-1/4"	21-1/2"	25-1/4" min. to 28-1/2" max.	21"	23-1/2"
PSB9100	27"	26-3/4"	19"	21-1/2"	25-1/4"	17-1/2"	23-1/2"

Note: See wall oven and warming drawer section for complete product and cutout dimensions.

Listed by Underwriters Laboratories

Above illustrations intended for dimensional reference only. Refer to photography for actual product appearance.

30" BUILT-IN MICROWAVE/ CONVECTION OVEN

		GE PROFILE™
		PWB7030SL PWB7030EL
FEATURES & CONTROLS		
Family-size oven		1.7 cu. ft.
Control type		Glass touch
Cooking technology		Convection
Microwave watts (IEC-705)		975
Power levels		10
Convection cooking controls	Combination Fast Cook	●
	Convection Bake/Broil	●
	Warm/Proof	●
	Auto Cook	●
	Popcorn	●
Sensor controls	Steam Cook	●
Convenience controls	Time Cook	●
	Defrost Weight/Time	●
Add 30 Seconds		● (My Cycle)
Control lockout		●
Timer on/off		●
Cooking complete reminder		●
Demo mode		●
Microwave oven interior		Stainless steel
Electronic digital display with clock		●
Interior lighting		Halogen
Oven racks		Pedestal
Turntable		●
Turntable diameter (in.)		16
APPEARANCE		
Color appearance*		SS ES
Handle		●
WEIGHTS & DIMENSIONS		
Overall oven interior dimensions (WxHxD in inches)		20-1/16 x 8-1/2 x 17
Approx. shipping weight (lbs.)		100
POWER/RATINGS		
Input Volts/Hertz		120V/60Hz
Input Amps/Watts (max.)		14.0/1,600

*SS = Stainless, ES = Slate.

30" BUILT-IN MICROWAVE/CONVECTION OVEN DIMENSIONS (IN INCHES)

MODEL PWB7030

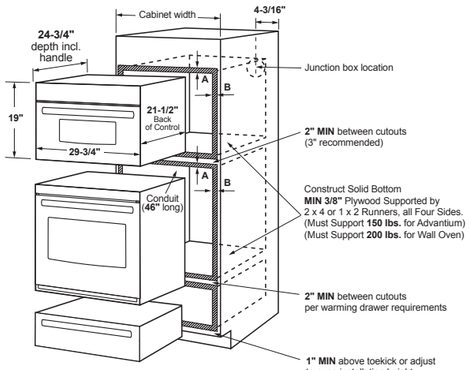

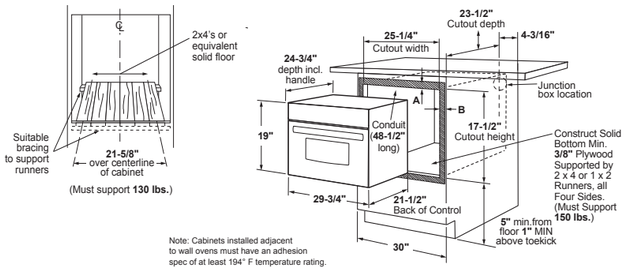

A = Allow clearance of 5/8" from the top and 1-1/8" from the bottom.
B = Allow clearance of 2-3/8" from the sides.

BUILT-IN MICROWAVE OVEN

		GE PROFILE
		PEB7227
UFAS/ADA compliant*		●/●
CAPACITY		
Oven cavity (cu. ft.)		2.2
FEATURES		
Watts (IEC-705 test procedure)		1,100
Electronic touch controls		●
Scrolling display with Help pad		●
Demo mode		●
Electronic digital display with clock		●
Display On/Off		●
Sensor controls	Popcorn	●
	Beverage	●
	Reheat	●
	Vegetable	●
	Potato	●
Express Cook		1–6 min.
Instant On controls		●
Time Cook		I & II
Add 30 Seconds		●
Weight/Time Defrost		●
Power levels		10
Turntable		Recessed
Turntable diameter (in.)		16-1/2
Timer on/off		●
Cooking Complete reminder		●
Control lockout		●
APPEARANCE		
Color appearance**		SS TS ES DS WW, BB
Case color**		Gray Gray Gray Gray CM
WEIGHTS & DIMENSIONS		
Approx. shipping weight (lbs.)		51
Dimensions (WxHxD in inches)	Cavity	17-5/16 x 11-1/16 x 19-1/16
	Exterior***	24-1/8 x 14 x 19-3/4
POWER/RATINGS		
Input Volt/Hz		120/60
Electric input	Watts	1,650
@ 120V	Amperage	13.9
ACCESSORIES		
Cooking guide label		●
Right-angle plug		●

*Model can be UFAS/ADA compliant in countertop or built-in configuration. For built-in, please see information for individual model.
**SS = Stainless, TS = Black Stainless, WW = White on white, BB = Black on black, CM = Color-matched.
***Exterior dimensions: height includes feet, depth does not include handle.

BUILT-IN TRIM KIT FOR 2.2 MICROWAVE OVENS

These trim kits allow for built-in installation of the 2.2 microwave oven in a wall or cabinet alone, or over a Profile 30" or 27" single electric wall oven. Do not install microwave lower than 36" above the floor.

30" TRIM KITS FOR MODEL PEB7227

MODEL	Z	30" DELUXE TRIM KIT
PEB7227ANDD	29-3/4"	JX7230SLSS - Stainless
PEB7227ANDD	29-3/4"	JX7230BLTS - Black Stainless
PEB7227ANDD	29-3/4"	JX7230ELES - Slate
PEB7227ANDD	29-3/4"	JX7230FMDS - Black Slate
PEB7227DLWW	29-3/4"	JX7230DLWW - White
PEB7227DLBB	29-3/4"	JX7230DLBB - Black

27" TRIM KITS FOR MODEL PEB7227

MODEL	Z	27" DELUXE TRIM KIT
PEB7227ANDD	26-3/4"	JX7227SLSS - Stainless
PEB7227ANDD	26-3/4"	JX7227BLTS - Black Stainless
PEB7227ANDD	26-3/4"	JX7227ELES - Slate
PEB7227ANDD	26-3/4"	JX7227FMDS - Black Slate
PEB7227DLWW	26-3/4"	JX7227DLWW - White
PEB7227DLBB	26-3/4"	JX7227DLBB - Black

CUTOUT DIMENSIONS MODEL PEB7227

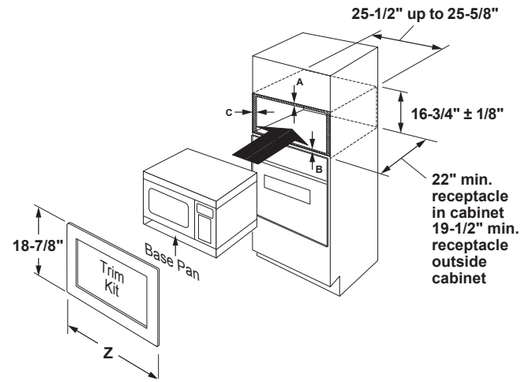

Cabinet overlap requirements	30"	27"
A - Overlap of trim kit over top of cabinet	1"	1"
B - Overlap of trim kit over bottom of cabinet	1-1/8"	1-1/8"
C - Overlap of trim kit over sides of cabinet	2-1/8"	5/8"

Note:
Allow an additional inch of clearance beyond trim frame on all sides

This information is not intended to be used for installing unit described. Before installing, consult installation instructions packed with product/kit for current dimensional data.

MICROWAVE OVEN

		GE PROFILE
		CONVECTION
		PEB9159SR PEB9159ER PEB9159DR
UFAS/ADA compliant*		●/●
California Prop 65		●
CAPACITY		
Oven cavity (cu. ft.)		1.5
FEATURES		
Watts (IEC-705 test procedure)		1,000
Electronic touch controls		●
Scrolling display with Help pad		●
Electronic digital display with clock		●
Display On/Off		●
Convection controls	Convection	●
	Combination (Conv/MWO)	●
	Popcorn	●
	Beverage	●
Sensor controls	Reheat	●
	Cook	●
Express Cook		1–6 min.
Instant On controls		●
Time Cook		I & II
Add 30 Seconds		●
Auto/Time Defrost		●
Power levels		10
Turntable		Recessed
Turntable diameter (in.)		13-1/2
Timer on/off		●
Cooking complete reminder		●
Control lockout		●
CONTROLS TOUCHPAD		
Add 30 seconds		●
Broil		●
Convection bake		●
Convection roast		●
Cook time		●
Mute On/Off		●
APPEARANCE		
Color appearance**		SS ES WW, BB
Case color**		Gray Gray CM
WEIGHTS & DIMENSIONS		
Approx. shipping weight (lbs.)		44
Dimensions (WxHxD in inches)	Cavity	15-1/2 x 10-7/8 x 15-1/2
	Exterior***	21-3/4 x 13 x 20
POWER/RATINGS		
Input Volt/Hz		120/60
Electric input	Watts	1,500
@ 120V	Amperage	13
ACCESSORIES		
Cooking guide label		●
Oven rack		2-pedestal
Optional built-in kit†		●
Right-angle plug		●

*Model can be UFAS/ADA compliant in countertop or built-in configuration. For built-in, please see information for individual model.
**SS = Stainless, TS = Black Stainless, ES = Slate, DS = Black Slate, WW = White on white, BB = Black on black, CM = Color-matched.
***Exterior dimensions: height includes feet, depth does not include handle.
†See page 400 for built-in trim kit information.

The wave guide cover is a thin specialized sheet consisting of mica material which covers the outlet where microwaves are emitted for cooking. Microwaves pass freely through this cover while it prevents steam and food particles from entering the magnetron area during cooking. **This cover is not to be removed or altered**. Doing so may void the product's warranty.

Location of wave guide cover will vary per model.

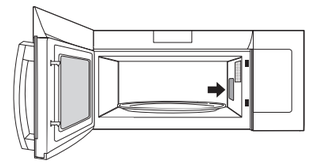

Above illustrations intended for dimensional reference only. Refer to photography for actual product appearance.

Above illustrations intended for dimensional reference only. Refer to photography for actual product appearance.

MICROWAVE OVEN TRIM KITS

BUILT-IN TRIM KITS FOR 1.5 CU. FT. MICROWAVE OVENS

Built-in trim kits allow installation in a wall, cabinet alone, or over a 30" or 27" single electric wall oven. Use a convection wall oven under these convection microwave ovens for a complete convection cooking center. Do not install microwave lower than 36" above the floor.

30" TRIM KITS FOR MODEL PEB9159

MODEL	Z	30" DELUXE TRIM KIT
PEB9159SJSS	29-3/4"	JX9153SJSS—Stainless
PEB9159EJES	29-3/4"	JX9153EJES—Slate
PEB9159DJWW	29-3/4"	JX9153DJWW—White
PEB9159DJBB	29-3/4"	JX9153DJBB—Black

27" TRIM KITS FOR MODEL PEB9159

MODEL	Z	27" DELUXE TRIM KIT
PEB9159SJSS	26-3/4"	JX9152SJSS—Stainless
PEB9159EJES	26-3/4"	JX9152EJES—Slate
PEB9159DJWW	26-3/4"	JX9152DJWW—White
PEB9159DJBB	26-3/4"	JX9152DJBB—Black

CUTOUT DIMENSIONS
MODEL PEB9159

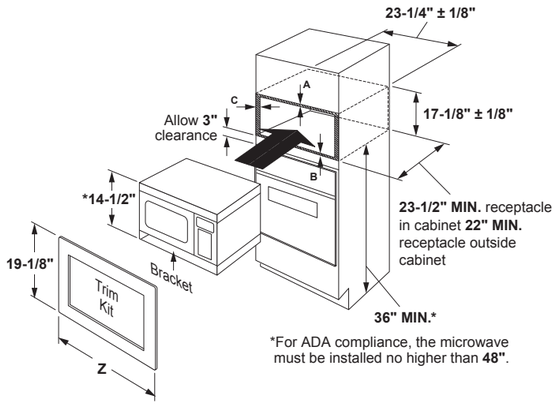

CABINET OVERLAP REQUIREMENTS	30"	27"
A - Overlap of trim kit over top of cabinet	1"	1"
B - Overlap of trim kit over bottom of cabinet	1"	1"
C - Overlap of trim kit over sides of cabinet	3-5/16"	1-7/8"

NOTE:
Allow an additional inch of clearance beyond trim frame on all sides.

The wave guide cover is a thin specialized sheet consisting of mica material which covers the outlet where microwaves are emitted for cooking. Microwaves pass freely through this cover while it prevents steam and food particles from entering the magnetron area during cooking. **This cover is not to be removed or altered**. Doing so may void the product's warranty.

Location of wave guide cover will vary per model.

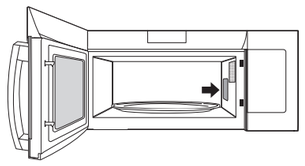

SPACEMAKER® MICROWAVE OVEN

		GE PROFILE™ PEM31SF PEM31BM PEM31EF PEM31FM PEM31DF
UFAS/ADA compliant*		●/●
California Prop 65		●/●
CAPACITY		
Oven cavity (cu. ft.)		1.1
FEATURES		
Watts (IEC-705 test procedure)		800
Electronic touch controls		●
Electronic digital display with clock		●
	Popcorn	●
	Beverage	●
	Reheat	●
	Vegetable	●
	Potato	●
Sensor controls	Defrost: Weight/Time	●
Express Cook		1-6 min.
Instant On controls		●
Time Cook		I & II
Add 30 Seconds		●
Power levels		10
Turntable On/Off		●
Turntable diameter (in.)		10-5/8
Kitchen timer/Timer (On/Off)		– /●
Cooking complete reminder		●
Control lockout		●
APPEARANCE		
Color appearance**		SS TS ES DS WW, BB
Case color**		Gray Gray Gray Gray CM
WEIGHTS & DIMENSIONS		
Approx. shipping weight (lbs.)		33
Dimensions*** (WxHxD in inches)	Cavity	17-3/8 x 9 x 12-1/4
	Exterior	24 x 12-1/8 x 12-7/8
POWER/RATINGS		
Input Volt/Hz		120V/60Hz
Electrical input @ 120V	Watts	1,200
	Amperage	10.5
ACCESSORIES		
Cooking guide label		●
Optional built-in kit		●
Optional hanging kit		JXA019K†
Right-angle plug		●

*Model must be in built-in configuration to be UFAS/ADA compliant.
**SS = Stainless, TS = Black Stainless, ES = Slate, DS = Black Slate, WW = White on white, BB = Black on black, CM = Color-matched.
***Exterior dimensions: height includes feet, depth does not include handle.
†JXA019K is available at additional cost.

BUILT-IN TRIM KIT FOR 1.1 CU. FT. MICROWAVE OVENS

Built-in trim kits allow installation in a wall, cabinet alone, or over a 30" or 27" GE electric wall oven. This kit should not be installed over a gas wall oven. Do not install microwave lower than 36" above the floor.

30" DELUXE TRIM KITS FOR MODEL PEM31

MODEL	Z	30" DELUXE TRIM KIT
PEM31SFSS	29-7/8"	JX830SFSS—Stainless
PEM31BLTS	29-7/8"	JX830BMTS—Black Stainless
PEM31EFES	29-7/8"	JX830EFES—Slate
PEM31FMDS	29-7/8"	JX830FMDS—Black Slate
PEM31DFWW	29-7/8"	JX830DFWW—White
PEM31DFBB	29-7/8"	JX830DFBB—Black

27" TRIM KITS FOR MODEL PEM31

MODEL	Z	27" DELUXE TRIM KIT
PEM31SFSS	26-7/8"	JX827SFSS—Stainless
PEM31BLTS	26-7/8"	JX827BMTS—Black Stainless
PEM31EFES	26-7/8"	JX827EFES—Slate
PEM31FMDS	26-7/8"	JX827FMDS—Black Slate
PEM31DFWW	26-7/8"	JX827DFWW—White
PEM31DFBB	26-7/8"	JX827DFBB—Black

CUTOUT DIMENSIONS

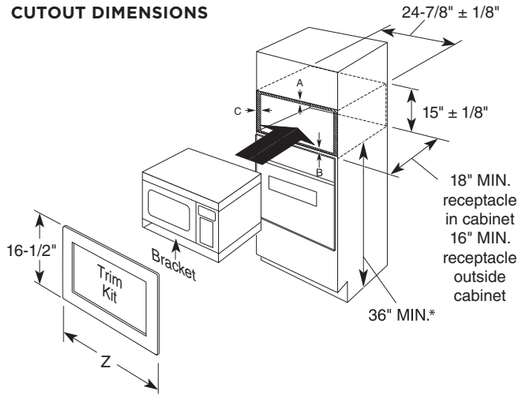

Cabinet overlap requirements	30"	27"
A - Overlap of trim kit over top of cabinet	3/4"	3/4"
B - Overlap of trim kit over bottom of cabinet	5/8"	5/8"
C - Overlap of trim kit over sides of cabinet	2-1/2"	1"

Note:
Allow an additional inch of clearance beyond trim frame on all sides

*For ADA compliance, the microwave must be installed no higher than 48".

This information is not intended to be used for installing unit described. Before installing, consult installation instructions packed with product/kit for current dimensional data.

UNDERCABINET MOUNTING KIT (PART NO. JXA019K) FOR MICROWAVE OVEN
MODEL PEM31
(Sold separately)

Not to be used over a thermal oven.

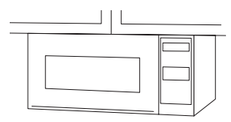

Undercabinet Installation

Install Spacemaker microwave ovens in just a few easy steps with the mounting template, which provides all the necessary measurements. These microwave ovens can be installed on practically any wood or metal cabinets. Installation may vary depending on cabinets.

Note: 120V, 60-cycle, grounded power receptacle location optional on back within cabinet opening.

Above illustrations intended for dimensional reference only. Refer to photography for actual product appearance.

Above illustrations intended for dimensional reference only. Refer to photography for actual product appearance.

36" BUILT-IN ELECTRIC COOKTOPS

	GE PROFILE™			GE		
	INDUCTION PHP9036SJ PHP9036BM PHP9036DJ	PP9036SJ PP9036DJ	PP7036SJ PP7036BM PP7036DJ	JP5036SJ JP5036DJ	JP3536SJ JP3536TJ JP3536DJ	JP3036SL JP3036TL JP3036DL
UFAS/ADA compliant	●	●	●	●	●	●
FEATURES						
Element type	Induction	Ribbon	Ribbon	Ribbon	Ribbon	Ribbon
Number of elements	5	5	5	5	5	5
SyncBurners	●	●	●			
Hot surface indicators	●	●	●	●	●	●
Cooktop "On" indicators	●	●	●	●	●	●
Pan presence & size sensor	●					
Custom Settings		●				
Multi-element timer		●				
Kitchen timer	●	●		●		
Keep Warm setting		●	●	●	●	●
Melt setting	●	●	●	●	●	●
CONTROLS						
Type	Digital touch with Red LED	Glide touch with Red LED	Knob with backlit Red LED	Digital touch with Red LED	Knob	Knob
Location	Front	Front	Front	Front	Front	Front
Control lock	●	●	●	●	●	
All-Off	●	●		●		
COOKTOP						
Element—left front	7" 2,500W	7" 1,500W	7" 1,500W	7" 1,500W	8"/5" 1,900W dual	7" 1,500W
Element—left rear	7" 2,500W	7" 1,500W	7" 1,500W	6" 1,200W	6" 1,200W	6" 120W warming zone
Element—right front	8" 3,200W	8"/5" 2,400W Power Boil	8"/5" 2,400W Power Boil	8"/5" 2,400W Power Boil	8" 2,500W Power Boil	8" 2,500W Power Boil
Element—right rear	6" 1,800W	6" 1,200W	6" 1,200W	6" 1,200W	6" 1,200W	6" 1,200W
Element—center	11" 3,700W	12"/9"/6" 3,000W tri-ring	12"/9"/6" 3,000W tri-ring	12"/9"/6" 3,000W tri-ring	12"/9" 2,700W dual	12"/9" 2,700W dual
APPEARANCE						
Color appearance*	SS TS BB	SS BB	SS TS BB	SS BB	SS WW BB	SS WW BB
Cooktop color	Black Black w/enamel Black	Black	Black Black w/enamel Black	Black	Black True white Black	Black True white Black
Cooktop surface	Ceramic-glass	Ceramic-glass Ceramic-glass with beveled edge	Ceramic-glass	Ceramic-glass	Ceramic-glass	Ceramic-glass
Cooktop frame	Stainless trim — —	Stainless trim —	Stainless trim — —	Stainless trim —	Stainless trim — —	Stainless trim — —
Knob color*			SS TS BB gloss		SS appearance WW gloss BB gloss	SS appearance WW gloss BB gloss
WEIGHTS & DIMENSIONS						
Approx. shipping wt. (lbs.)	55	58	53	53	53	53
Cabinet width	36	36	36	36	36	36
Overall dimensions (WxHxD in inches)	36-1/8 x 4-5/8 x 20-1/2 36 x 4-5/8 x 20-3/8	36-1/8 x 5-9/16 x 20-1/2 36 x 5-9/16 x 20-3/8	36-1/8 x 5-9/16 x 20-1/2 36 x 5-9/16 x 20-3/8	36-1/8 x 5-9/16 x 20-1/2 36 x 5-9/16 x 20-3/8	36-1/8 x 4 x 20-1/2 36 x 4 x 20-3/8 36 x 4 x 20-3/8	36-1/8 x 3-3/8 x 21 36 x 3-3/8 x 20-7/8 36 x 3-3/8 x 20-7/8
Cutout dimensions (WxD in inches)	33-7/8 x 19-1/8	33-7/8 x 19-1/8	33-7/8 x 19-1/8	33-7/8 x 19-1/8	33-7/8 x 19-1/8	33-7/8 x 19-1/8
POWER/RATINGS						
KW rating @ 240V	11.1	9.5	9.6	9.3	9.5	8.0
KW rating @ 208V	9.6	7.2	7.2	7.0	7.1	6.0
Amps @ 240V	50	40	40	40	40	33.4
Amps @ 208V	50	40	40	40	40	29.0
OPTIONAL ACCESSORIES						
Griddle	JXGRIDL1	JXGRIDL1	JXGRIDL1			

*SS = Stainless, TS = Black Stainless, WW = White on white, BB = Black on black.

COUNTER INSTALLATION DIMENSIONS (IN INCHES)

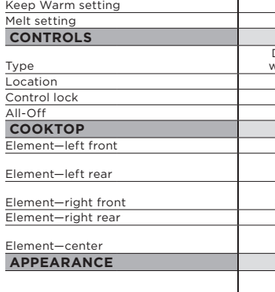



Above illustrations intended for dimensional reference only.
Refer to photography for actual product appearance.

 See page 274 for warranty information.

30" BUILT-IN ELECTRIC COOKTOPS

	GE PROFILE			GE		
	INDUCTION PHP9030SJ PHP9030BM PHP9030DJ	PP9030SJ PP9030DJ	PP7030SJ PP7030BM PP7030DJ	JP5030SJ JP5030DJ	JP3530SJ JP3530TJ JP3530DJ	JP3030SJ JP3030TJ JP3030DJ
UFAS/ADA compliant	●	●	●	●	●	●
FEATURES						
Element type	Induction	Ribbon	Ribbon	Ribbon	Ribbon	Ribbon
Number of elements	4	5	5	4	4	4
SyncBurners	●	●	●	●		
Hot surface indicators	●	●	●	●	●	●
Cooktop "On" indicators	●	●	●	●	●	●
Pan presence & size sensor	●					
Custom settings		●				
Multi-element timer		●				
Kitchen timer	●	●		●		
Keep Warm setting		●	●	●	●	●
Melt setting	●	●	●	●	●	●
CONTROLS						
Type	Digital touch w/Red LED	Glide touch w/Red LED	Knob w/backlit Red LED	Digital touch w/Red LED	Knob	Knob
Location	Front	Front	Front	Front	Right	Right
Control lock	●	●	●	●	●	
All-Off	●	●		●		
COOKTOP						
Element—left front	7" 2,500W	7" 1,500W	7" 1,500W	7" 1,500W	7" 1,500W	6" 1,200W
Element—left rear	7" 2,500W	7" 1,500W	7" 1,500W	7" 1,500W	8" 2,500W Power Boil	8" 2,500W Power Boil
Element—right front	11" 3,700W	8"/5" 2,200W dual	8"/5" 2,200W dual	9"/6" 3,100W Power Boil	9"/6" 3,100W Power Boil	8" 2,500W Power Boil
Element—right rear	6" 1,800W	6" 1,200W	6" 1,200W	6" 1,200W	6" 1,200W	6" 1,200W
Element—center		9"/6" 3,100W Power Boil	9"/6" 3,100W Power Boil			
APPEARANCE						
Color appearance*	SS TS BB	SS BB	SS TS BB	SS BB	SS WW BB	SS WW BB
Cooktop color	Black Black w/ enamel Black	Black	Black Black w/ enamel Black	Black	Black True white Black	Black True white Black
Cooktop surface	Ceramic-glass	Ceramic-glass Ceramic-glass w/beveled edge	Ceramic-glass	Ceramic-glass	Ceramic-glass	Ceramic-glass
Cooktop frame	Stainless trim — —	Stainless trim —	Stainless trim — —	Stainless trim —	Stainless trim — —	Stainless trim — —
Knob color*			SS appearance TS appearance BB gloss		SS appearance WW gloss BB gloss	SS appearance WW gloss BB gloss
WEIGHTS & DIMENSIONS						
Approx. shipping wt. (lbs.)	44	46	47	44	43	43
Cabinet width	30	30	30	30	30	30
Overall dimensions (WxHxD in inches)	29-7/8 x 4-5/8 x 21 29-7/8 x 4-5/8 x 21 29-7/8 x 4-5/8 x 21	29-7/8 x 5-9/16 x 21 29-3/4 x 5-9/16 x 20-7/8	29-7/8 x 5-9/16 x 21 29-7/8 x 5-9/16 x 21 29-7/8 x 5-9/16 x 21	29-7/8 x 5-9/16 x 21 29-3/4 x 5-9/16 x 20-7/8	29-7/8 x 4 x 21 29-3/4 x 4 x 20-7/8 29-3/4 x 4 x 20-7/8	29-7/8 x 4 x 21 29-3/4 x 4 x 20-7/8 29-3/4 x 4 x 20-7/8
Cutout dimensions (WxD in inches)	28-1/2 x 19-5/8	28-1/2 x 19-5/8	28-1/2 x 19-5/8	28-1/2 x 19-5/8	28-1/2 x 19-5/8	28-1/2 x 19-5/8
POWER/RATINGS						
KW rating @ 240V	7.4	9.5	9.4	7.3	8.3	7.4
KW rating @ 208V	6.4	7.1	7.1	5.5	6.2	5.6
Amps @ 240V	40	40	40	40	40	40
Amps @ 208V	40	40	40	30	30	30
OPTIONAL ACCESSORIES						
Griddle	JXGRIDL1	JXGRIDL1	JXGRIDL1	JXGRIDL1		
Trim kit	JXTR32B	JXTR32B	JXTR32B	JXTR32B	JXTR32B JXTR32W	JXTR32B JXTR32W

*SS = Stainless, TS = Black Stainless, WW = White on white, BB = Black on black.

COUNTER INSTALLATION DIMENSIONS (IN INCHES)

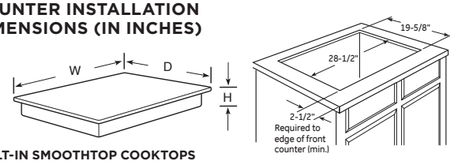

BUILT-IN SMOOTHTOP COOKTOPS

Requires a 5" free area between the bottom of the cooktop to any combustible material, e.g., shelving. Free area not required when installing wall oven underneath cooktop. Refer to installation instructions. Units are furnished with a 48" flexible armored cable.

36" ribbon cooktops are approved for use over GE 30" single wall ovens and warming drawers. 30" ribbon cooktops are approved for use over GE 30" and 27" single wall ovens and warming drawers. Refer to cooktop and wall oven installation instructions packed with product for current dimensional data.

BUILT-IN INDUCTION COOKTOPS

Requires a 3" min. free area between the bottom of the cooktop to any combustible material, e.g., shelving. Free area not required when installing wall oven underneath cooktop. Refer to installation instructions. Units are furnished with a 36" flexible armored cable. 30" and 36" induction cooktops are approved for use over GE and Profile 30" and 27" single wall ovens. Refer to cooktop and wall oven installation instructions packed with product for current dimensional data.

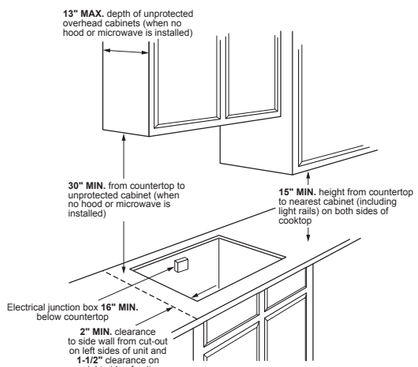

FILLER TRIM KIT

When replacing an old GE 30" cooktop (with larger opening) with new 30" models, use the following one-piece trim kit to fill in the oversized hole. Available at additional cost.

JXTR32B (Black)
JXTR32W (White)

INSTALLATION INFORMATION

Before installing, consult installation instructions packed with product for current dimensional data.

Above illustrations intended for dimensional reference only.
Refer to photography for actual product appearance.

See page 274 for warranty information.

21" BUILT-IN ELECTRIC COOKTOP

		GE
		JP3021DP
UFAS/ADA compliant		
FEATURES & CONTROLS		
Element type		Ribbon
Number of elements		2
Control type		Knob (infinite switch)
Control location		Front right
Control lock		No
Knob cleaning		Dishwasher-safe
Cooktop "On" indicators, location		1, front right
COOKTOP		
Element—left front		9"/6" 2,500W
Element—left rear		6" 1,200W
APPEARANCE		
Color appearance*		BB
Cooktop color		Patterned black
Cooktop surface		Ceramic-glass
Knob color		Black plastic
WEIGHTS & DIMENSIONS		
Approx. shipping wt. (lbs.)		20
Net weight (lbs.)		17
Cabinet width compatibility (in.)		21
Overall dimensions (WxHxD in inches)		21-1/2 x 3 x 17-1/8
Cutout dimensions (WxD in inches)		20-1/8 x 16-1/8
POWER/RATINGS		
KW rating @	240V	3.7
	208V	3.2
Amps @	240V	20
	208V	20

*BB = Black on black

COOKTOP DIMENSIONS (IN INCHES)

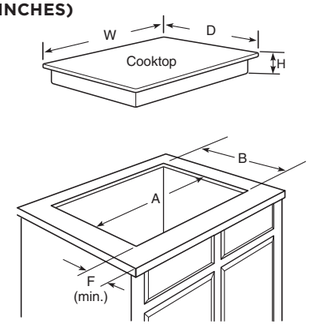

	OVERALL			CUTOUT		MINIMUM SPACING TO NEAREST COMBUSTIBLE WALL			TO EDGE OF FRONT COUNTER (MIN.)
Model	W	D	H	A	B	C	R	L	F
JP3021	21-1/2	17-1/8	3-1/4	19-7/8	15-15/16	2	1-3/4	1-3/4	2-3/4

COUNTER INSTALLATION DIMENSIONS (IN INCHES) MODEL JP3021

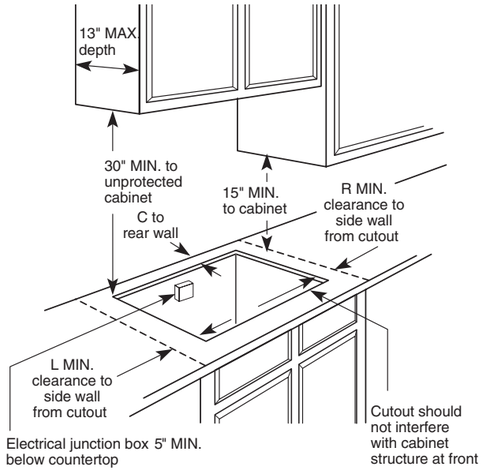

BUILT-IN ELECTRIC COOKTOPS

Required free area between the bottom of the cooktop and any combustible material, e.g., shelving, is 1-1/2" minimum on model JP256.

Free area not required when installing wall oven underneath. Requires an 18" minimum from cooktop to adjacent overhead cabinets. Units are furnished with a 48" flexible armored cable.

Note: The countertop must be at least 26" deep with a flat surface area of 23-1/2" or more, front to back. In addition, other clearances to the front edge of the countertop must be considered.

INSTALLATION INFORMATION

Before installing, consult installation instructions packed with product for current dimensional data.

COUNTER INSTALLATION DIMENSIONS (IN INCHES) MODEL JP3021

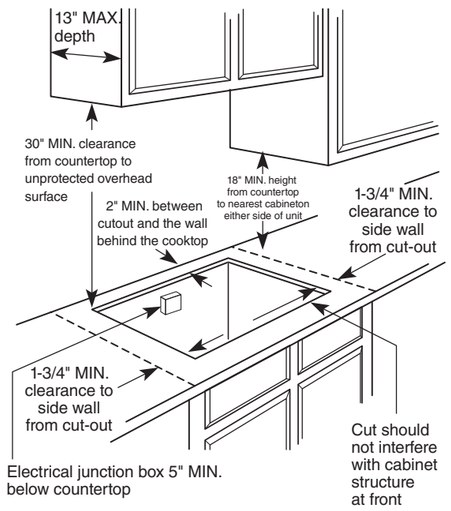

Above illustrations intended for dimensional reference only. Refer to photography for actual product appearance.

 See page 274 for warranty information.

36" BUILT-IN GAS COOKTOPS

	GE PROFILE™		GE		
	PGP9036SL	PGP7036SL PGP7036BM	JGP5536SL JGP5536DL	JGP5036SL JGP5036DL	JGP3036SL JGP3036DL
UFAS/ADA compliant	●	●	●	●	●
FEATURES & CONTROLS					
Number of burners	5	5	5	5	5
Control location	Front center	Front center	Front center	Front center	Front center
Control lock	●				
Heavy-duty knobs	●	●			
Backlit knobs	White LED	White LED			
Knob cleaning	Dishwasher-safe	Dishwasher-safe	Dishwasher-safe	Dishwasher-safe	Dishwasher-safe
BURNER CONFIGURATION*					
Burner type	Sealed	Sealed	Sealed	Sealed	Sealed
Ignition type	Electronic	Electronic	Electronic	Electronic	Electronic
Burner–left front BTUs (NG/LPG)	9,500/9,500	9,500/9,500	11,000/9,100	9,500/9,500	12,000/12,000
Burner–left rear BTUs (NG/LPG)	9,500/9,500	9,500/9,500	9,100/8,100	9,500/9,500	9,500/9,500
Burner–right front BTUs (NG/LP gas)	15,000/15,000 Power Boil	15,000/15,000 Power Boil	15,000/13,000 Power Boil	15,000/15,000 Power Boil	15,000/15,000 Power Boil
Burner–right rear BTUs (NG/LPG)	5,000/5,000	5,000/5,000	6,000/6,000	5,000/5,000	9,500/9,500
Burner–center BTUs (NG/LPG)	18,000/18,000 Tri-ring	18,000/18,000 Power Boil	6,000/6,000	15,000/15,000 Power Boil	5,000/5,000
GRATES					
Number of grates	3	3	3	3	3
Grate construction	Matte black, heavy-cast	Matte black, heavy-cast	Matte black, deluxe-cast	Matte black, heavy-cast	Matte black, standard-cast
Grate configuration	Continuous	Continuous	Continuous	Continuous	Continuous
Cast-iron griddle	Included (JXGRIDL236)	Optional (JXGRIDL236)		Optional (JXGRIDL236)	
APPEARANCE					
Color appearance**	SS	SS/TS	SS/BB	SS/BB	SS/WW, BB
Cooktop color	SS	SS/BB	BB/BB	SS/BB	SS/WW, BB
Cooktop surface	Deep-recessed	Deep-recessed	Ceramic-glass	Deep-recessed	Deep-recessed
Knob color**	SS appearance	SS appearance TS appearance	SS appearance Gloss black	SS appearance Gloss black	SS appearance Gloss white, Gloss black
WEIGHTS & DIMENSIONS					
Approx. shipping wt. (lbs.)	57	57	56	46	44
Net weight (lbs.)	51	51	50	40	38
Cabinet width compatibility (in.)	36	36	36	36	36
Overall dimens. (WxHxD in inches)	36 x 5-1/2 x 21	36 x 5-1/2 x 21	36 x 3-7/8 x 21-1/4	36 x 5-1/2 x 21	36 x 4-3/4 x 21
Cutout dimens. (WxD in inches)	33-7/8 x 19-1/8	33-7/8 x 19-1/8	33-7/8 x 19-1/8	33-7/8 x 19-1/8	33-7/8 x 19-1/8
POWER/RATINGS					
Amp Rating @ 120V, 60Hz	5	5	5	5	5

*A set of LP orifices is included with each cooktop for LP conversion. Factory set for natural gas.
**SS = Stainless, TS = Black Stainless, WW = White on white, BB = Black on black.

30" BUILT-IN GAS COOKTOPS

	GE PROFILE		GE			
	PGP9030SL	PGP7030SL PGP7030BM	JGP5530SL JGP5530DL	JGP5030SL JGP5030DL	JGP3530SL JGP3530DL	JGP3030SL JGP3030DL
UFAS/ADA compliant	●	●	●	●	●	●
FEATURES & CONTROLS						
Number of burners	5	5	4	5	4	4
Control location	Front center	Front center	Right side	Front center	Right side	Right side
Control lock	●					
Heavy-duty knobs	●	●				
Backlit knobs	White LED	White LED				
Knob cleaning	Dishwasher-safe	Dishwasher-safe	Dishwasher-safe	Dishwasher- safe	Dishwasher-safe	Dishwasher-safe
BURNER CONFIGURATION*						
Burner type	Sealed	Sealed	Sealed	Sealed	Sealed	Sealed
Ignition type	Electronic	Electronic	Electronic	Electronic	Electronic	Electronic
Burner–left front BTUs (NG/LPG)	9,500/9,500	9,500/9,500	9,100/8,100	9,500/9,500	18,000/18,000 Power Boil	15,000/15,000 Power Boil
Burner–left rear BTUs (NG/LPG)	9,500/9,500	9,500/9,500	11,000/9,100	9,500/9,500	5,000/5,000	5,000/5,000
Burner–right front BTUs (NG/LP gas)	12,000/12,000	12,000/12,000	15,000/13,000 Power Boil	12,000/12,000	12,000/12,000	12,000/12,000
Burner–right rear BTUs (NG/LPG)	5,000/5,000	5,000/5,000	6,000/6,000	5,000/5,000	9,500/9,500	9,500/9,500
Burner–center BTUs (NG/LPG)	18,000/18,000 Tri-ring	18,000/18,000 Power Boil		15,000/15,000 Power Boil		
GRATES						
Number of grates	3	3	2	3	2	2
Grate construction	Matte black, heavy-cast	Matte black, heavy-cast	Matte black, deluxe-cast	Matte black, heavy-cast	Matte black, standard-cast	Matte black, standard-cast
Grate configuration	Continuous	Continuous	Continuous	Continuous	Continuous	Continuous
Cast-iron griddle	Included (JXGRIDL230)	Optional (JXGRIDL230)		Optional (JXGRIDL230)		
APPEARANCE						
Color appearance**	SS	SS/TS	SS/BB	SS/BB	SS/WW,BB	SS/WW, BB
Cooktop color	SS	SS/BB	BB/BB	SS/BB	SS/WW,BB	SS/WW, BB
Cooktop surface	Deep-recessed	Deep-recessed	Ceramic-glass	Deep-recessed	Deep-recessed	Deep-recessed
Knob color**	SS appearance	SS appearance TS appearance	SS appearance Gloss black	SS appearance Gloss black	SS appearance Gloss black	SS appearance Gloss white, Gloss black
WEIGHTS & DIMENSIONS						
Approx. shipping wt. (lbs.)	50	50	48	48	44	44
Net weight (lbs.)	44	44	42	42	38	38
Cabinet width compatibility (in.)	30	30	30	30	30	30
Overall dimens. (WxHxD in inches)	30 x 5-1/2 x 21	30 x 5-1/2 x 21	30 x 3-7/8 x 21	30 x 5-1/2 x 21	30 x 4-3/4 x 21	30 x 4-3/4 x 21
Cutout dimens. (WxD in inches)	28-1/2 x 19-5/8	28-1/2 x 19-5/8	28-1/2 x 19-5/8	28-1/2 x 19-5/8	28-1/2 x 19-5/8	28-1/2 x 19-5/8
POWER/RATINGS						
Amp Rating @ 120V, 60Hz	5	5	5	5	5	5

*A set of LP orifices is included with each cooktop for LP conversion. Factory set for natural gas.
**SS = Stainless, TS = Black Stainless, WW = White on white, BB = Black on black.

See page 274 for warranty information.

30" BUILT-IN GAS COOKTOPS

COUNTER INSTALLATION DIMENSIONS (IN INCHES)

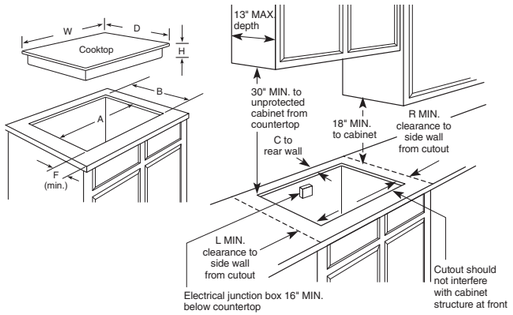

DIMENSIONS (IN INCHES)

	OVERALL			CUTOUT		MINIMUM SPACING TO NEAREST COMBUSTIBLE WALL			TO EDGE OF FRONT COUNTER
MODEL	W	H*	D	A	B	C	L	R	F
PGP9036	36	5-1/2	21	33-7/8	19-1/8	3-3/8	12	12	2-1/2
PGP7036	36	5-1/2	21	33-7/8	19-1/8	3-3/8	12	12	2-1/2
JGP5536	36	3-7/8	21-1/4	33-7/8	19-1/8	2-1/4	6	6	2-1/2
JGP5036	36	5-1/2	21	33-7/8	19-1/8	3-3/8	12	12	2-1/2
PGP9030	30	5-1/2	21	28-1/2	19-5/8	2-7/8	12	12	2-1/2
PGP7030	30	5-1/2	21	28-1/2	19-5/8	2-7/8	12	12	2-1/2
JGP5530	30	5-1/2	21-1/4	28-1/2	19-5/8	2-1/4	6	6	2-1/2
JGP5030	30	5-1/2	21	28-1/2	19-5/8	2-7/8	12	12	2-1/2
JGP3036	36	4-3/4	21	33-7/8	19-1/8	2-1/4	6	6	2-1/2
JGP3530	30	4-3/4	21	28-1/2	19-5/8	2-1/4	6	6	2-1/2
JGP3030	30	4-3/4	21	28-1/2	19-5/8	2-1/4	6	6	2-1/2

*Allow 5-3/4" depth at rear for electrical and gas connections.
Raised bullnose countertops may require up to 3/8" additional clearance to prevent interference with curved front.

Installation information: Before installing, consult installation instructions packed with product for current dimensional data.

GAS CONNECTION ALL MODELS

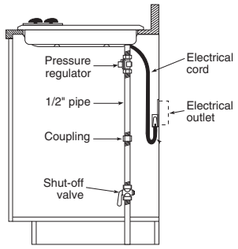

Installation with single wall oven information:
Select 30" gas cooktops are approved for use over GE 27" wall ovens and warming drawers. 36" and 30" gas cooktops are approved for use over 30" wall ovens and warming drawers. Refer to cooktop and wall oven installation instructions packed with product for current dimensional data.

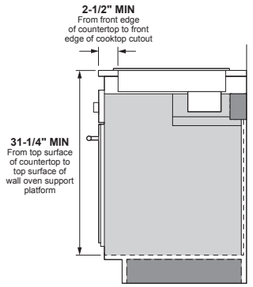

BUILT-IN COOKTOP & WALL OVEN COMBINATIONS

Find approved cooktop/wall oven installation combinations below.

			WALL OVENS						
			30" SINGLE WALL OVENS				27" SINGLE WALL OVENS		
			PTS9000	PTS7000	JTS5000	JTS3000	PKS7000	JKS5000	JKS3000
COOKTOPS	36" INDUCTION COOKTOP	PHP9036	●	●	●	●			
	30" INDUCTION COOKTOP	PHP9030	●	●	●	●	●	●	●
	36" ELECTRIC COOKTOPS	PP9036	●	●	●	●			
		PP7036	●	●	●	●			
		JP5036	●	●	●	●			
		JP3536	●	●	●	●			
		JP3036	●	●	●	●			
	30" ELECTRIC COOKTOPS	PP9030	●	●	●	●	●	●	●
		PP7030	●	●	●	●	●	●	●
		JP5030	●	●	●	●	●	●	●
		JP3530	●	●	●	●	●	●	●
		JP3030	●	●	●	●	●	●	●
	36" GAS COOKTOPS	PGP9036	●	●	●	●			
		PGP7036	●	●	●	●			
		JGP5536	●	●	●	●			
		JGP5036	●	●	●	●			
		JGP3036	●	●	●	●			
	30" GAS COOKTOPS	PGP9030	●	●	●	●			
		PGP7030	●	●	●	●			
		JGP5530	●	●	●	●	●	●	●
		JGP5030	●	●	●	●			
		JGP3530	●	●	●	●	●	●	●
		JGP3030	●	●	●	●	●	●	●

UL® approved cooktops over wall ovens.

For models available before 2019, please reference geappliances.com.

Above illustrations intended for dimensional reference only. Refer to photography for actual product appearance.

30" BUILT-IN ELECTRIC DOWNDRAFT COOKTOP

	GE PROFILE™
	PP9830SJ PP9830TJ PP9830DJ
UFAS/ADA compliant	●
FEATURES & CONTROLS	
Element type	Ribbon
Number of elements	4
Control type	Knob
Control location	Front
Control lock	●
Downdraft	3 speeds
Hot surface indicators	●
Cooktop "On" indicators	●
COOKTOP	
Element—left front	7" 1,800W bridge
Element—left rear	7" 1,800W bridge
Element—right front	9"/6" 3,000W Power Boil
Element—right rear	6" 1,500W
APPEARANCE	
Color appearance*	SS WW BB
Cooktop color	Black White Black
Cooktop surface	Ceramic-glass
Cooktop frame	Stainless trim White Black
Knob color*	SS appearance WW gloss BB gloss
WEIGHTS & DIMENSIONS	
Approx. shipping wt. (lbs.)	43
Cabinet width	30
Overall dimensions (WxHxD in inches)	29-13/16 x 2-1/4 x 21-15/16 29-3/4 x 2-3/16 x 21-7/8 29-3/4 x 2-3/16 x 21-7/8
Cutout dimensions (WxD in inches)	28-7/8 x 20-5/8
POWER/RATINGS	
KW rating @ 240V	9.1
KW rating @ 208V	6.9
Amps @ 240V	40
Amps @ 208V	40

*SS = Stainless, WW = White on white, BB = Black on black.

BUILT-IN ELECTRIC DOWNDRAFT COOKTOP DIMENSIONS (IN INCHES)

MODEL PP9830

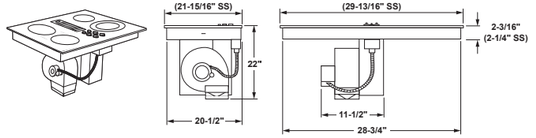

BUILT-IN ELECTRIC AND GAS CABINET DIMENSIONS (IN INCHES)

MODELS PP9830, PGP9830

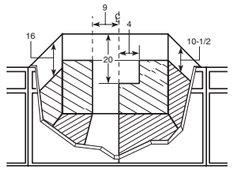

RECEPTACLE LOCATION

Install an approved junction box within shaded area shown in diagram. Junction box must be at least 10-1/2" below top of cabinet.

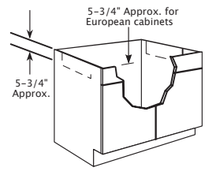

PREPARING THE CABINET FOR INSTALLATION

In some cabinets, the sides may need to be scooped or cut down 5-3/4" as shown and the corner braces removed in order to accommodate the cooktop.

Above illustrations intended for dimensional reference only. Refer to photography for actual product appearance.

30" BUILT-IN GAS-ON-GLASS DOWNDRAFT COOKTOP

	GE PROFILE
	PGP9830SJ PGP9830TJ PGP9830DJ
UFAS/ADA compliant	●
FEATURES & CONTROLS	
Number of burners	4
Burner type	Sealed
Control type	Knob
Control location	Front
Ignition	Electronic
Downdraft	3 speeds
COOKTOP	
Burner—left front	9,100 BTU
Burner—left rear	9,100 BTU
Burner—right front	11,500 BTU
Burner—right rear	5,500 BTU
APPEARANCE	
Color appearance*	SS WW BB
Cooktop color	Black White Black
Cooktop surface	Ceramic-glass
Grates	2 separate
Grates material	Matte black, medium-cast
Cooktop frame	Stainless trim White Black
Knob color*	SS appearance WW gloss BB gloss
WEIGHTS & DIMENSIONS	
Approx. shipping wt. (lbs.)	43
Cabinet width	30
Overall dimensions (WxHxD in inches)	29-13/16 x 2-1/4 x 21-15/16 29-3/4 x 2-3/16 x 21-7/8 29-3/4 x 2-3/16 x 21-7/8
Cutout dimensions (WxD in inches)	28-7/8 x 20-5/8
POWER/RATINGS	
Voltage	120V

*SS = Stainless, WW = White on white, BB = Black on black.

BUILT-IN GAS DOWNDRAFT COOKTOP DIMENSIONS (IN INCHES)

MODEL PGP9830

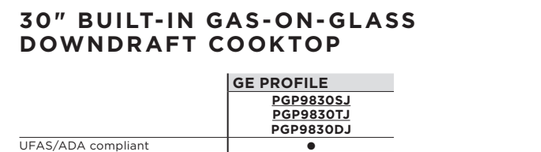

BUILT-IN ELECTRIC AND GAS CUTOUT DIMENSIONS (IN INCHES)

MODELS PP9830, PGP9830

Note: These cooktops are approved for indoor use only.

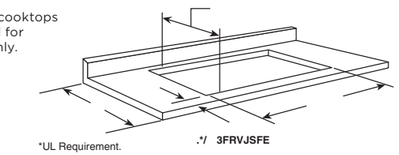

UL Requirement. ./ 3FRVJSFE

Note: A 5" minimum spacing to adjacent side wall is required on PGP9830. A 6" minimum spacing to adjacent side wall is required on PP9830.

Note: JXCK89 cord kit needed for the installation of model PP9830.

Note: All gas cooktop models require 7/16" free area below cooktop height to combustible material, and require 18" minimum from countertop to adjacent overhead cabinets.* *ADA requirement.

Note: See following page for installation drawings.

BUILT-IN ELECTRIC AND GAS DOWNDRAFT COOKTOP VENTING OPTIONS

MODELS PP9830, PGP9830

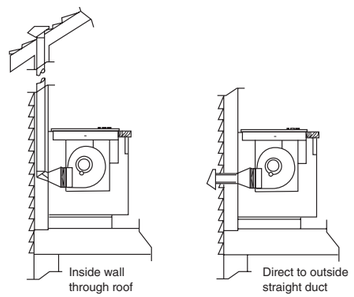

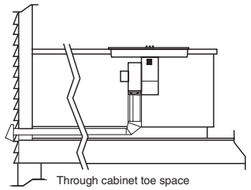

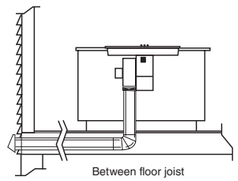

BUILT-IN ELECTRIC AND GAS DOWNWARD VENTING DIMENSIONS (IN INCHES)

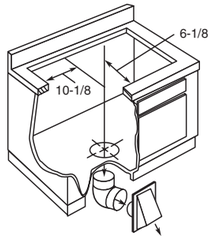

BUILT-IN ELECTRIC AND GAS REAR WALL VENTING DIMENSIONS (IN INCHES)

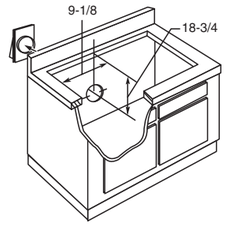

WALL INSTALLATION

Wall installations require 25" countertop depth. When cabinet is flush against the wall, the fan housing can be rotated to the horizontal position for direct venting through rear wall. Make a countertop cutout in the range cabinet according to unit dimensions and installation type. Duct hole is positioned in back of cabinet for through-the-wall ducting.

PENINSULA OR ISLAND INSTALLATION

For peninsula/islands, a minimum 26" countertop depth is suggested. Blower should be in vertical position. Island or peninsula cabinets may require adjustment in cutout depth and/or location within the width dimensions. Duct hole is positioned in bottom of cabinet for island or peninsula installation.

SLAB INSTALLATION

For peninsula or island installation and rear wall ducting, **6" PVC duct or locally approved piping should be used if installing under a poured concrete slab.**

Note: Electrical cable is not supplied with unit.

JXCK89 ELECTRICAL CONNECTION KIT

Optional accessory kit for PP9830 electric downdraft cooktop only, includes junction box and conduit.

Installation information: Before installing, consult installation instructions packed with product for current dimensional data.

Installing the ductwork

Use galvanized or aluminum duct in 6" round or 3-1/4" x 10" size, or combination of both. **PVC duct or locally approved piping should be used if installing under a poured concrete slab.** Local building code must be followed in specifying type and schedule of all duct used.

Note: Ductwork must be vented to outside. Do not vent into a wall, ceiling, crawlspace, attic or any concealed space. Always use an appropriate roof or wall cap with damper. Laundry-type wall caps should never be used. For maximum efficiency use the shortest and straightest duct run possible, with as few fittings as possible. For satisfactory performance the duct run should not exceed 100 feet equivalent length. Refer to the table of equivalent lengths (shown in installation instructions) for various duct configurations.

UNIVERSAL HOODS INSTALLATION INFORMATION

Note: See following page for specifications.

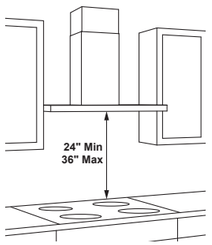

UNIVERSAL HOODS

The vent hood must be installed 24" min. above the cooking surface. For optimal performance, installing the hood more than 36" above the cooking surface is not recommended. The hood installation height above the cooking surface depends upon ceiling height. The telescopic duct cover conceals the ductwork running from the top of the hood to the ceiling.
NOTE: Installation height should be measured from the cooking surface to the lowest part of the hood. This hood may be installed onto a wall and vented to the outdoors, or it can be installed for recirculating operation. Parts for recirculating operation are supplied with the hood.

MODEL UVW9361

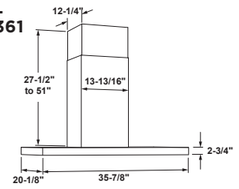

36" models require a 36"-wide opening
*The supplied duct cover fits 7'-7" to 10'-6" ceiling heights
(12' ceiling height with optional high ceiling kit UX12DC93SS/UX12DC93TS)
(14' ceiling height with optional high ceiling kit UX14DC93SS/UX14DC93TS)

MODEL UVW9301

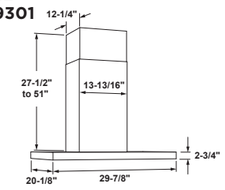

30" models require a 30"-wide opening
*The supplied duct cover fits 7'-7" to 10'-6" ceiling heights
(12' ceiling height with optional high ceiling kit UX12DC93SS/UX12DC93TS)
(14' ceiling height with optional high ceiling kit UX14DC93SS/UX14DC93TS)

MODEL UVW8361

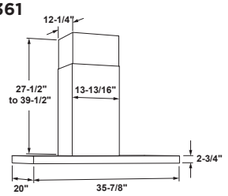

36" models require a 36"-wide opening
*The supplied duct cover fits 7'-7" to 9'-6" ceiling heights
(10' ceiling height with optional high ceiling kit UX10DC83SS)

MODEL UVW8301

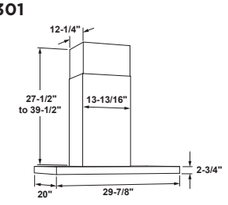

30" models require a 30"-wide opening
*The supplied duct cover fits 7'-7" to 9'-6" ceiling heights
(10' ceiling height with optional high ceiling kit UX10DC83SS)

Installation information: Before installing, consult installation instructions packed with product for current dimensional data.

Above illustrations intended for dimensional reference only. Refer to photography for actual product appearance.

UNIVERSAL HOODS

	UNIVERSAL						
	UVW9361SL UVW9361BL	UVW9301SL UVW9301BL	UVW8361SL	UVW8301SL	UVC9360SL	UVC9300SL	UVC7300SL
ADA capable	● (w/Connected App)	● (w/Connected App)	● (w/UXRC1)	● (w/UXRC1)	● (w/Connected App)	● (w/Connected App)	● (w/UXRC1)
AHAM certified	Yes	Yes	Yes	Yes	Yes	Yes	Yes
UL certified	●	●	●	●	●	●	●
California Title 24 compliant	●	●	●	●	●	●	●
FEATURES & CONTROLS							
Control type	Electronic Touch	Electronic Touch	Electronic backlit	Electronic backlit	Electronic backlit push-button	Electronic backlit push-button	Electronic backlit push-button
Control location	Front	Front	Front	Front	Bottom	Bottom	Bottom
Number of fan speeds	4	4	3	3	4	4	4
Number of blowers	1	1	1	1	1	1	1
FILTERS							
Number of filters	2	2	3	3	3	3	2
Included grease filter type	Mesh	Mesh	Mesh	Mesh	Baffle	Baffle	Mesh
Filter cleaning	Dishwasher-safe	Dishwasher-safe	Dishwasher-safe	Dishwasher-safe	Dishwasher-safe	Dishwasher-safe	Dishwasher-safe
LIGHTING							
Number of cooktop lights	3	3	2	2	3	3	2
Lighting control	On/Off/ Nite-Light	On/Off/ Nite-Light	On/Off/ Nite-Light	On/Off/ Nite-Light	On/Off/ Nite-Light	On/Off/ Nite-Light	On/Off/ Nite-Light
Type of lighting	LED	LED	LED	LED	LED	LED	LED
Light bulb(s)	Included	Included	Included	Included	Included	Included	Included
INSTALLATION							
Mounting	Wall	Wall	Wall	Wall	Custom	Custom	Custom
Venting type	Convertible	Convertible	Convertible	Convertible	Convertible	Convertible	Convertible
Exhaust direction	Top	Top	Top	Top	Top	Top	Top
Round duct diameter (in.)	8	8	8	8	8	8	8
CFM/SONES RATINGS							
Top Round (blower boost speed)	610/–	610/–	N/A	N/A	610/–	610/–	390/–
Top Round (high speed)	290/4	290/4	350/3.1	350/3.1	288/4.9	288/4.9	302/3.7
APPEARANCE							
Color appearance*	SS TS	SS TS	SS	SS	SS	SS	SS
WEIGHTS & DIMENSIONS							
Approx. shipping wt. (lbs.)	84	79	76	73	52	48.5	42
Net weight (lbs.)	73	71	65	64	45	43	37
Cabinet width compatibility (in.)	36	30	36	30	34-3/8	28-3/8	30
Overall dimensions (WxHxD in inches)	40-1/6 x 29-1/8 x 22-5/6	34-1/4 x 29-1/8 x 22-5/6	40-1/6 x 29-1/8 x 22-5/6	34-1/4 x 29-1/8 x 22-5/6	37-4/5 x 16-1/2 x 22	31-8/9 x 16-1/2 x 22	20-1/2 x 9-5/8 x 11-1/4
POWER/RATINGS							
Amp Rating @ 120V	3.0	3.0	2.5	2.5	3.0	3.0	2.5
OPTIONAL ACCESSORIES							
Makeup air accessory kit – 8", 6" duct	JXMUA8	JXMUA8	JXMUA8	JXMUA8	JXMUA8	JXMUA8	JXMUA8
Duct reducer	UXCT86	UXCT86	UXCT86	UXCT86	UXCT86	UXCT86	UXCT86
10 (ft.) ceiling duct cover kit			UX10DC8SLSS	UX10DC8SLSS			
12 (ft.) ceiling duct cover kit	UX12DC9SLSS/BLTS	UX12DC9SLSS/BLTS	UX12DC9SLSS	UX12DC9SLSS			
14 (ft.) ceiling duct cover kit	UX14DC9SLSS/BLTS	UX14DC9SLSS/BLTS	UX14DC9SLSS	UX14DC9SLSS			
Charcoal filter	UXCF91	UXCF91	UXCF91	UXCF91	UXCF91	UXCF91	UXCF91
Power cord kit	JXHC1	JXHC1	JXHC1	JXHC1	JXHC1	JXHC1	JXHC1

*SS=Stainless, TS = Black Stainless.

Note: See previous page for more installation drawings.

MODEL UVC9360

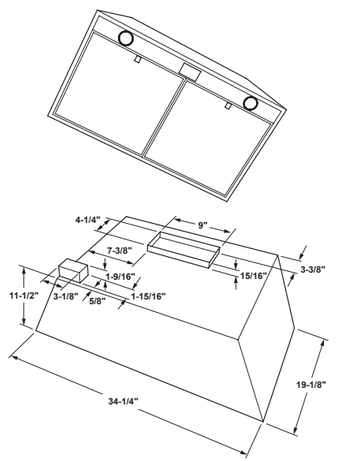

MODEL UVC9300

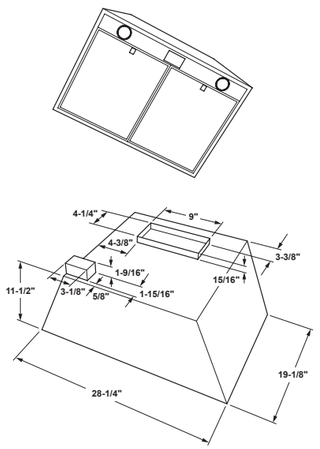

MODEL UVC7300

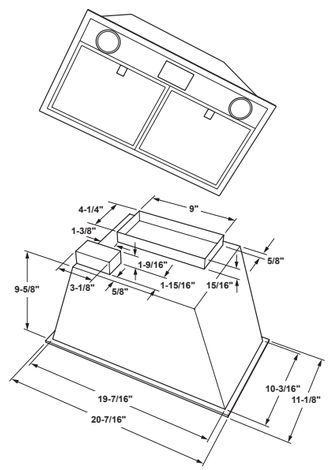

Above illustrations intended for dimensional reference only. Refer to photography for actual product appearance.

36" AND 30" DESIGNER/COMMERCIAL HOODS

	UNIVERSAL				GE PROFILE™		
	UVW9364SPSS	**UVW9304SPSS**	**UVW8364SPSS**	**UVW8304SPSS**	**PV977N**	**PV976N**	**PV970N**
AHAM certified	●	●	●	●	●	●	●
California Title 24 compliant			●	●	●	●	●
FEATURES & CONTROLS							
Control type	Backlit push-button	Backlit push-button	Push-button	Push-button	Push-button	Push-button	Push-button
Control location	Hidden	Hidden	Hidden	Hidden	Front	Front	Front
Auto-on heat-sensor feature	●	●	●	●	●	●	●
Number of fan speeds	4	4	4	4	4	4	4
Number of blowers	1	1	1	1	1	1	1
FILTERS							
Number of filters	2	2	2	2	1	1	1
Included grease filter type	Metal mesh	Metal mesh	Metal mesh	Metal mesh	Metal mesh/ Charcoal	Metal mesh/ Charcoal	Metal mesh/ Charcoal
Filter cleaning	Dishwasher-safe	Dishwasher-safe	Dishwasher-safe	Dishwasher-safe	Dishwasher-safe/ Disposable	Dishwasher-safe/ Disposable	Dishwasher-safe/ Disposable
LIGHTING							
Number of cooktop lights	2	2	2	2	4	2	2
Lighting control	Off/High/ Night light	Off/High/ Night light	Off/High/ Night light	Off/High/ Night light	Off/Low/High	Off/Low/High	Off/Low/High
Type of lighting	LED	LED	LED	LED	Halogen	Halogen	Halogen
Light bulb(s)	Included	Included	Included	Included	Included	Included	Included
INSTALLATION							
Mounting	Wall	Wall	Wall	Wall	Island	Wall	Wall
Venting type	Convertible	Convertible	Vented	Vented	Convertible	Convertible	Convertible
Exhaust direction	Top/horizontal	Top/horizontal	Top	Top	Top	Top	Top
Round duct diameter (in.)	8	8	8	8	8	8	8
Maximum equivalent duct length (ft.)			100	100	100	100	100
CFM/SONES RATINGS							
Top round (high speed)	590/7.5	590/7.5	590/9.0	590/9.0	450/7.0	450/7.0	450/7.0
Top round (working speed)	160/0.4	160/0.4	160/3.0	160/3.0	210/1.5	210/1.5	210/1.5
APPEARANCE							
Color appearance*	SS	SS	SS	SS	SS	SS	SS
WEIGHTS & DIMENSIONS							
Approx. shipping wt. (lbs.)	77	68	77	68	110	75	68
Net weight (lbs.)	54	54	60	54	100	68	60
Cabinet width compatibility (in.)	36	30	36	30	36	36	30
Overall dimensions (WxHxD in inches)	36 x 10 x 21	30 x 10 x 21	36 x 10 x 21	30 x 10 x 21	35-7/8 x 3-1/8 x 27-5/8	35-7/8 x 3-1/8 x 19-3/4	29-7/8 x 2-1/2 x 19-3/4
POWER/RATINGS							
Amp Rating @ 120V	3.90	3.90	3.90	3.90	4.10	4.10	4.10
OPTIONAL ACCESSORIES							
Makeup air accessory kit— 8"/6" duct					JXMUA8/JXMUA6	JXMUA8/JXMUA6	JXMUA8/JXMUA6
15" Cabinet spacer			JXS56SS	JXS50SS			
Duct cover kit			UXCH2NSS	UXCH2NSS			
10' duct cover			CX10DC9SSS	CX10DC9SSS	CX10DC9SSS	CX10DC9SSS	CX10DC9SSS
12' duct cover			CX12DC9SSS	CX12DC9SSS	CX12DC9SSS	CX12DC9SSS	CX12DC9SSS

*SS = Stainless.

UVW9304, UVW9364

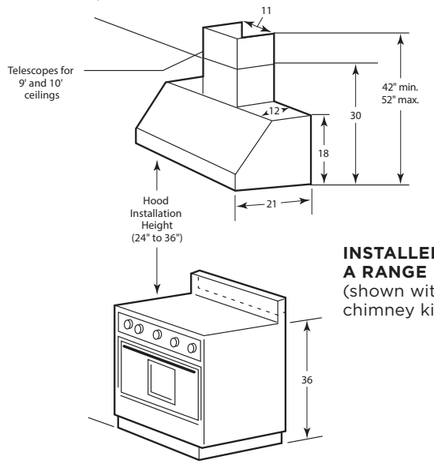

INSTALLED ABOVE A RANGE
(shown with optional chimney kit)

UVW9304, UVW9364

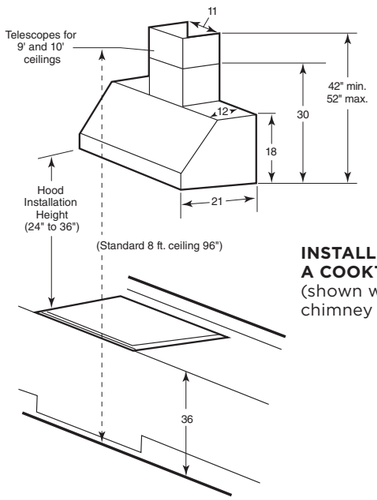

INSTALLED ABOVE A COOKTOP
(shown with optional chimney kit)

OPTIONAL KITS FOR 36" AND 30" DESIGNER/COMMERCIAL HOODS UVW8304, UVW8364, UVW9304, UVW9364

UXCH2NSS—Stainless chimney extension kit
JXMUA8—Makeup air accessory kit for 8" inlet duct
JXMUA6—Makeup air accessory kit for 6" inlet duct

Above illustrations intended for dimensional reference only. Refer to photography for actual product appearance.

UVW8304

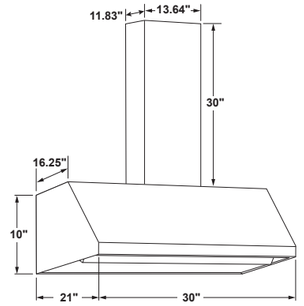

UVW8364

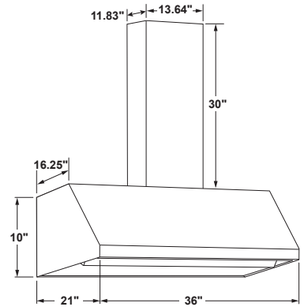

ISLAND MOUNT
PV977

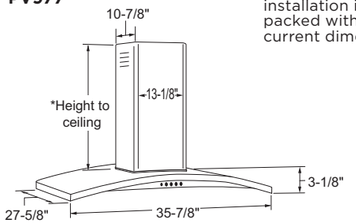

*The supplied duct cover fits 7'11" to 10'4" ceiling heights (10'9" in recirculation mode).

Installation information: Before installing, consult installation instructions packed with product for current dimensional data.

WALL MOUNT
PV976

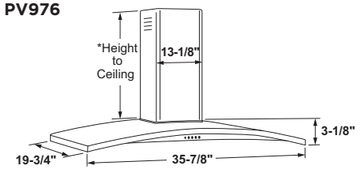

*The supplied duct cover fits 7' 11" to 10' 2" ceiling heights (10' 6" in recirculation mode)

PV970

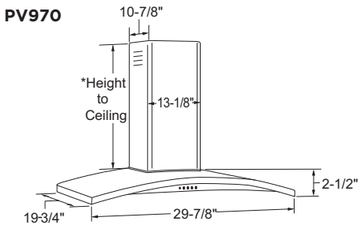

30" models require a 30"-wide opening

*The supplied duct cover fits 7'11" to 10'2" ceiling heights (10'6" in recirculation mode).

Note: Vent hoods should be of the same or greater width of the cooking surface.

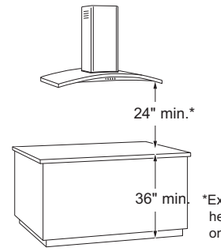

*Exact installation height depends on ceiling height.

Note: Typical overhead cabinets are 12" deep. For cabinets of greater depth, place spacer of non-combustible material behind hood, or use the 15" cabinet spacer optional accessory—see chart for details.

NOTE: Installation height should be measured from the cooking surface to the bottom of the outer glass portion of the hood. This hood must be installed 24" min. above the cooking surface.The cooking surface should be at least 36" above the floor. This hood may be vented to the outdoors, or it can be installed for recirculating operation.

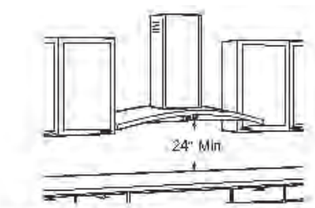

The vent hood must be installed 24" min. above the cooking surface.The hood installation height above the cooking surface depends upon ceiling height. The telescopic duct cover conceals the ductwork running from the top of the hood to the ceiling. The supplied duct cover is sized to reach 8' to 10' ceiling heights.

NOTE: Installation height should be measured from the cooking surface to the lowest part of the hood. This hood may be installed onto a wall and vented to the outdoors, or it can be installed for recirculating operation. All necessary parts for recirculating operation are supplied with the hood. No kits are required.

AHAM VERIFIDE

Listed by Underwriters Laboratories

Above illustrations intended for dimensional reference only. Refer to photography for actual product appearance.

36" AND 30" DESIGNER HOODS

	GE	
	JVW5361SJ JVW5361BJ JVW5361EJ* JVW5361FJ	**JVW5301SJ JVW5301BJ JVW5301EJ* JVW5301FJ**
ADA capable	●	●
AHAM certified	●	●
California Title 24 compliant	●	●
FEATURES & CONTROLS		
Control type	Electronic backlit	Electronic backlit
Control location	Front	Front
Number of fan speeds	4	4
Number of blowers	1	1
FILTERS		
Number of filters	3	2
Included grease filter type	Metal mesh	Metal mesh
Filter cleaning	Dishwasher-safe	Dishwasher-safe
LIGHTING		
Number of cooktop lights	2	2
Lighting control	On/Off/Night light	On/Off/Night light
Type of lighting	Halogen	Halogen
Light bulb(s)	Included	Included
INSTALLATION		
Mounting	Wall	Wall
Venting type	Convertible	Convertible
Exhaust direction	Top	Top
Round duct diameter (in.)	6	6
CFM/SONES RATINGS		
Top Round (boost speed)	350/6.6	350/6.6
Top Round (high speed)	340/5.1	340/5.1
Top Round (working speed)	150/1.0	150/1.0
APPEARANCE		
Color appearance**	SS/TS/ES/DS	SS/TS/ES/DS
WEIGHTS & DIMENSIONS		
Approx. shipping wt. (lbs.)	37	35
Net weight (lbs.)	20	16
Cabinet width compatibility (in.)	36	30
Overall dimensions (WxHxD in inches)	36 x 9-3/4 x 18-1/2	30 x 9-3/4 x 18-1/2
POWER/RATINGS		
Amp Rating @ 120V	2.5	2.5
OPTIONAL ACCESSORIES		
Makeup air accessory kit—8"/6" duct	JJXMUA6	JJXMUA6
10 (ft.) ceiling duct cover kit	UXDC53SS/TS/ES/DS	UXDC53SS/TS/ES/DS
Charcoal filter	JXCF72	JXCF72
Remote control	UXRC70	UXRC70

*10 ft. duct cover included in box.
**SS = Stainless, TS = Black Stainless, ES = Slate, DS = Black Slate.

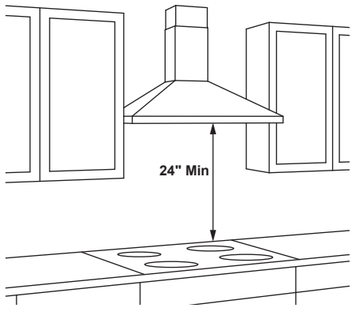

The vent hood must be installed 24" min. above the cooking surface. For optimal performance, installing the hood more than 38" above the cooking surface is not recommended. The hood installation height above the cooking surface depends upon ceiling height. The telescopic duct cover conceals the ductwork running from the top of the hood to the ceiling.

NOTE: Installation height should be measured from the cooking surface to the lowest part of the hood. This hood may be installed onto a wall and vented to the outdoors, or it can be installed for recirculating operation. Parts for recirculating operation are supplied with the hood. However, when installed for recirculating, the optional charcoal filter UXCF72 will need to be purchased separately.

JVW5361

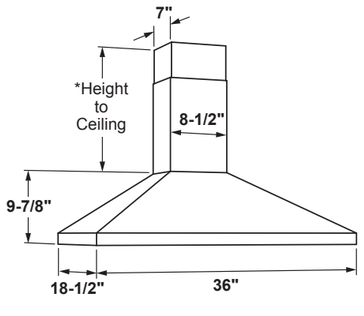

36" models require a 36"-wide opening
*The supplied duct cover fits 7'-4" to 9'-0" ceiling heights (10' with optional high ceiling kit UXDC72 and UX10DC53. See install instructions for specific details.)

JVW5301

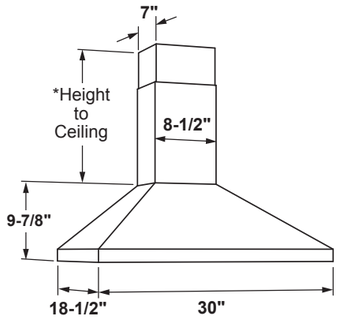

30" models require a 30"-wide opening
*The supplied duct cover fits 7'-4" to 9'-0" ceiling heights (10' with optional high ceiling kit UXDC72 and UX10DC53. See install instructions for specific details.)

AHAM VERIFIDE

Listed by Underwriters Laboratories

Above illustrations intended for dimensional reference only.
Refer to photography for actual product appearance.

36" AND 30" TELESCOPIC DOWNDRAFT SYSTEMS

	UNIVERSAL	
	UVD6361SP UVD6361DP	**UVD6301SP UVD6301DP**
ADA compliant	●	●
AHAM certified	●	●
California Title 24 compliant	●	●
FEATURES & CONTROLS		
Control type	Electronic push-button	Electronic push-button
Control location	Remote	Remote
Number of fan speeds		
Number of blowers	1	1
FILTERS		
Number of filters	2	2
Included grease filter type	Metal mesh	Metal mesh
Filter cleaning	Soap & water	Soap & water
INSTALLATION		
Venting type	Vented	Vented
Exhaust direction	Downdraft	Downdraft
Rectangular duct size (in.)	3-1/4 x 10	3-1/4 x 10
Round duct diameter (in.)	6	6
Maximum equivalent duct length (ft.)	100	100
Optional remote blower mount	Capable	Capable
CFM/SONES RATINGS		
Downdraft (high speed)	500/9.0	500/9.0
Downdraft (working speed)	200/2.5	200/2.5
APPEARANCE		
Color appearance*	SS BB	SS BB
Top cover plate*	SS Black	SS Black
Telescopic assembly*	SS	SS
WEIGHTS & DIMENSIONS		
Approx. shipping wt. (lbs.)	74	69
Net weight (lbs.)	59	54
Cabinet width compatibility (in.)	36	30
Overall dimensions (WxHxD in inches)	36 x 27 x 9-1/2	30 x 27 x 9-1/2
Telescoping height (in.)	8.5	8.5
POWER/RATINGS		
Amp rating @ 120V	4.00	4.00

*SS = Stainless, BB = Black on black.
Note: Approved for use with GE Profile™ and GE electric and sealed burner gas cooktops.

OVERALL DIMENSIONS (IN INCHES)
MODELS UVD6301, UVD6361

	A	B
36" Models	36"	33-15/16"
30" Models	30"	28-5/16"

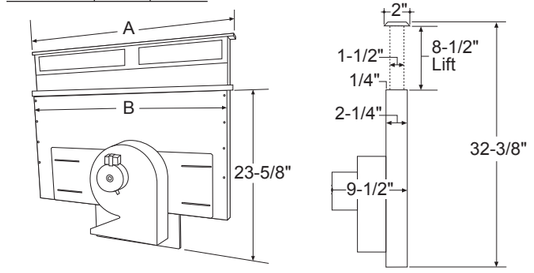

Approved for use with the following GE Profile and GE cooktops: 36" and 30" electric models, 36" and 30" gas sealed burner models and 36" and 30" Profile induction models. Before installing, consult installation instructions packed with product for current dimensional data.
Not approved for use with standard burner gas cooktops.

Note: The countertop must be at least 26" deep with a flat surface area of 23-1/2" or more, front to back. In addition, other clearances to the front edge of the countertop must be considered.

Note: Dimensions shown are for reference only. Before cutting out countertop, refer to instructions packed with downdraft and cooktop.

Note: Installation in cabinets/countertops against the wall will not be possible in most applications. Against-the-wall installations are limited to dimension requirements. Refer to installation instructions packed with product for further details.

JXRB67 Indoor Remote Kit. Optional service part may be ordered for installation of motor and blower assembly in an indoor remote location.

Installation Information: Before installing, consult installation instructions packed with product for current dimensional data.

The vent is designed for a 3-1/4" x 10" duct size. A 3-1/4" x 10" rectangular to 6" round transition duct is available at your local building supply store.

Above illustrations intended for dimensional reference only.
Refer to photography for actual product appearance.

36" AND 30" UNDER-THE-CABINET HOODS

	GE PROFILE™		GE							
	PVX7360SJ PVX7360FJ	PVX7300SJ PVX7300FJ	JVX5365SJ	JVX5305SJ JVX5305EJ JVX5305DJ	JVX5360SJ JVX5360BJ JVX5360EJ JVX5360DJ	JVX5300SJ JVX5300BJ JVX5300EJ JVX5300DJ	JVX3300SJ JVX3300EJ JVX3300DJ	JV338H	JN328K JN327H	JVX3240SJ JVX3240DJ
ADA capable	●	●	●	●	●	●	●			●
ENERGY STAR® certified			●	●						
AHAM certified	●	●	●	●	●	●	●	●		●
California Title 24 compliant	●	●	●	●	●	●				
FEATURES & CONTROLS										
Control type	Glass Touch	Glass Touch	Rocker Switch	Rocker Switch	Electronic Backlit	Electronic Backlit	Rocker Switch	Rocker Switch	Rocker Switch	Rocker Switch
Control location	Front	Front	Front	Front	Front	Front	Front	Front	Front	Front
Chef Connect	Yes	Yes								
Number of fan speeds	4	4	2	2	4	4	2	2	2	2
Number of blowers	1	1	1	1	1	1	1	1	1	1
FILTERS										
Number of filters	2	2	2	2	2	2	1	1	1	1
Included grease filter type	Dual full-length stainless mesh	Dual full-length stainless mesh	Dual full-length metal mesh	Dual full-length metal mesh	Dual full-length metal mesh	Dual full-length metal mesh	Single metal mesh	Metal mesh	Charcoal	Single metal mesh
Filter cleaning	Dishwasher-safe	Dishwasher-safe	Dishwasher-safe	Dishwasher-safe	Dishwasher-safe	Dishwasher-safe	Dishwasher-safe	Hand wash	Disposable	Dishwasher-safe
LIGHTING										
Number of cooktop lights	2	2	2	2	2	2	1	1	1	1
Lighting control	On/Off/ Nite-Light	On/Off/ Nite-Light	On/Off	On/Off	On/Off/ Nite-Light	On/Off/ Nite-Light	On/Off	On/Off	On/Off	On/Off
Type of lighting	Dual LED	Dual LED	Dual LED	Dual LED	Dual halogen	Dual halogen	Incandescent	Incandescent	Incandescent	Incandescent
Light bulb(s)	Included	Included	Included	Included	Included	Included	Included	Not included	Not included	Included
INSTALLATION										
Mounting	Under-the-cabinet	Under-the-cabinet	Under-the-cabinet	Under-the-cabinet	Under-the-cabinet	Under-the-cabinet	Under-the-cabinet	Under-the-cabinet	Under-the-cabinet	Under-the-cabinet
Venting type	Convertible	Convertible	Convertible	Convertible	Convertible	Convertible	Convertible	Vented	Recirculating	Convertible
Exhaust direction	Top/Rear	Top/Rear	Top/Rear	Top/Rear	Top/Rear	Top/Rear	Top/Rear	Top/Rear	Front	Top
Round duct diameter (in.)	7	7	7	7	7	7	7	7		7
CFM/SONES RATINGS										
Top Round (boost speed)	390/8.0	390/8.0			310/7.0	310/7.0				
Top Round (high speed)	310/6.0	310/6.0	270/4.5	270/4.5	260/5.5	260/5.5	200/6.5	160/7.0		200/6.5
Top Round (medium speed)	210/4.0	210/4.0			170/3.0	170/3.0				
Top Round (working speed)	70/1.5	70/1.5	100/1.5	100/1.5	60/1.0	60/1.0	130/5.0			130/5.0
APPEARANCE										
Color appearance*	SS DS	SS DS	SS	SS ES WW, BB	SS TS ES WW, BB	SS TS ES WW, BB	SS ES WW, BB	WW, BB	SA WW, CC, BB	SS WW
WEIGHTS & DIMENSIONS										
Approx. shipping wt. (lbs.)	30	28	29	27	28	26	23	19	19	21
Net weight (lbs.)	23	21	22	20	21	19	17	19	19	15
Cabinet width compatibility (in.)	36	30	36	30	36	30	30	30	30	24
Overall dimensions (WxHxD in inches)	35-7/8 x 5-1/2 x 20	29-7/8 x 5-1/2 x 20	35-7/8 x 5-1/2 x 20	29-7/8 x 5-1/2 x 20	35-7/8 x 5-1/2 x 20	29-7/8 x 5-1/2 x 20	29-7/8 x 5-1/2 x 20	29-7/8 x 5-1/2 x 17-1/2	29-7/8 x 5-1/2 x 17-1/2	23-7/8 x 5-1/2 x 20
POWER/RATINGS										
Amp Rating @120V	2.5	2.5	2.5	2.5	2.5	2.5	2.5	2.5	2.5	2.5
OPTIONAL ACCESSORIES										
Remote control	UXRC70	UXRC70			UXRC70	UXRC70				
Cabinet spacer	JXS56SS	JXS50SS	JXS56SS	JXS50SS	JXS56SS	JXS50SS	JXS50SS			
Power cord kit	JXHC1	JXHC1	JXHC1	JXHC1	JXHC1	JXHC1	JXHC1	JXCH1	JXCH1	JXHC1
Damper accessory (round)	JXDA22	JXDA22	JXDA22	JXDA22	JXDA22	JXDA22	JXDA22	JXDA22		JXDA22

*SS=Stainless, TS = Black Stainless, DS=Black Slate, ES=Slate, SA=Silver, WW=White, CC=Bisque, BB=Black.

HOOD INSTALLATION DIMENSIONS (IN INCHES)

MODELS PVX7360, JVX5365, JVX5360

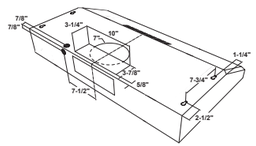

MODELS PVX7300, JVX5305, JVX5300, JVX3300

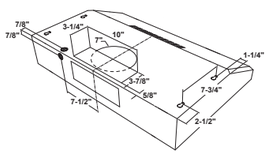

MODEL JV338H

Exhaust outlet connects to 3-1/4" x 10" rectangular duct. Vent top or rear. Includes rectangular damper.

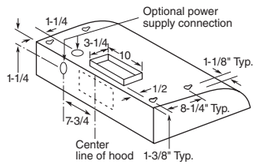

MODEL JV338H

Exhaust outlet connects to 7" diameter duct. Vent top only. Round damper accessory JXDA22 available at additional cost.

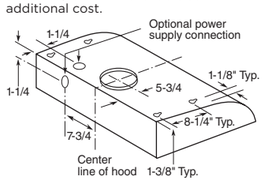

MODEL JN328, JN327H

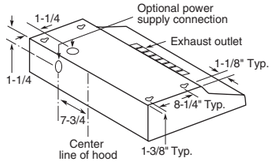

MODEL JVX3240

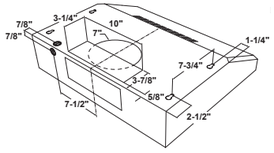

OVERALL DIMENSIONS (IN INCHES)

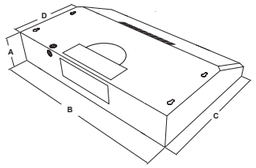

MODEL	A	B	C	D
PVX7360	5-1/2	35-7/8	20	12
PVX7300	5-1/2	29-7/8	20	12
JVX5365	5-1/2	35-7/8	20	12
JVX5305	5-1/2	29-7/8	20	12
JVX5360	5-1/2	35-7/8	20	12
JVX5300	5-1/2	29-7/8	20	12
JVX3300	5-1/2	29-7/8	20	12
JV338	5-1/2	29-7/8	17-1/2	12
JN328/JN327	5-1/2	29-7/8	17-1/2	12
JVX3240	5-1/2	23-7/8	20	12

AHAM VERIFIDE

Listed by Underwriters Laboratories

Installation information: Before installing, consult installation instructions packed with product for current dimensional data.

JXHC1 Cord Kit: Allows a receptacle in the cabinet over the range to accommodate either an over-the-range microwave oven or a standard hood.

Above illustrations intended for dimensional reference only. Refer to photography for actual product appearance.

See page 274 for warranty information.

30" DROP-IN ELECTRIC RANGES

	GE
	JD630SF JD630DF
UFAS/ADA compliant	●/●
FEATURES	
Capacity (cu. ft.) upper/lower	4.4
Cleaning system	Self-clean
Cooking technology	Traditional
CONTROLS	
Certified Sabbath mode	●
Control lock capability	●
Electronic oven controls	●
Delay bake	●
Digital temperature display	●
Hot surface lights	4
Self-clean latch	Auto
COOKTOP	
Element—left front	8" 2,000W
Element—left rear	8" 2,000W
Element—right front	9"/6" 3,000W Power Boil
Element—right rear	6" 1,200W
Melt	●
OVEN	
Audible preheat signal	●
Bake element	6-pass
Broil element	6-pass
Dual-element bake	●
Interior oven light	1 incandescent
Oven racks	2
APPEARANCE	
Ceramic-glass cooktop	Black Patterned White, Black
Color appearance*	SS with gray WW, BB
Handle color*	SS CM
Handle design	Designer-style
Knobs—weighted	●
Knobs—color*	SS CM
Oven interior	Black
WEIGHTS & DIMENSIONS	
Approx. shipping wt. (lbs.)	184 179
Overall oven interior dimensions (WxHxD in inches)	24 x 17-1/2 x 18-1/4
POWER/RATINGS	
Bake wattage	3,410W
Broil wattage	3,420W
Amp rating 240V/208V	40
KW rating 240V/208V	11.9/8.9

*SS = Stainless, WW = White with white glass door, BB = Black with black glass door, CM = Color-matched.

DIMENSIONS AND INSTALLATION INFORMATION (IN INCHES)

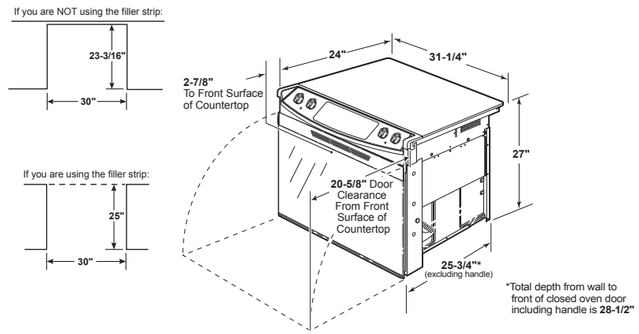

*Total depth from wall to front of closed oven door including handle is **28-1/2"**

If you are NOT using the filler strip or backguard:

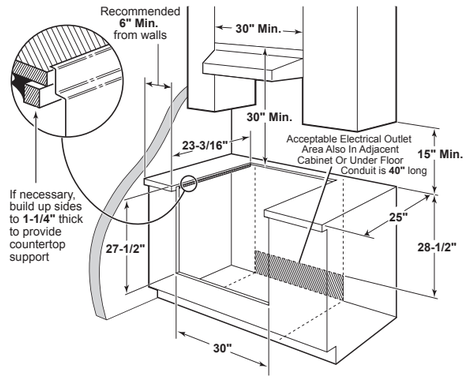

Optional accessory backguard
(Available at additional cost)
Attaches to the back of range as a backguard when unit is installed in 30" free-standing cutout

Optional rear filler trim kit
(Available at additional cost)
Fills gap between cooktop and wall when unit is installed in 30" free-standing cutout
WB07T10680—Stainless/Black models
WB07T10681—White models
WB07T10682—Bisque models

Note: Cabinets installed adjacent to drop-in electric ranges must have an adhesion spec of at least a 194°F temperature rating.

Note: Cabinets and drawers on adjacent 45° and 90° walls should be placed to avoid interference with the handle.

Note: To reduce possibility of scorching the side walls above the countertop when no load is present on burners, it is recommended that a minimum 6" spacing from adjacent side wall be allowed for possible extended high-heat element operation.

Note: Drop-in configuration is also approved for 34" countertop heights.

Installation information: Before installing, consult installation instructions packed with product for current dimensional data.

IMPORTANT: 30" DROP-IN RANGES ARE DESIGNED TO HANG FROM THE COUNTERTOP. THEY DO NOT REST ON THE FLOOR. FOR INSTALLATION ALTERNATIVES, REFER TO INSTALLATION INSTRUCTIONS PACKED WITH PRODUCT.

Drop-in ranges are not approved for installation with a plug and receptacle. They must be hard wired in accordance with installation instructions.

Above illustrations intended for dimensional reference only. Refer to photography for actual product appearance.

27" DROP-IN ELECTRIC RANGE

	GE
	JM250DF
UFAS/ADA compliant	●/●
California Prop 65	●/●
FEATURES	
Capacity (cu. ft.) upper/lower	3.0
Cleaning system	Self-clean
Cooking technology	Traditional
CONTROLS	
Certified Sabbath mode	●
Electronic oven controls	●
Delay bake	●
Digital temperature display	●
Self-clean latch	●
COOKTOP	
Element—left front	8" 2,600W 5-turn
Element—left rear	6" 1,500W 4-turn
Element—right front	6" 1,500W 4-turn
Element—right rear	6" 1,500W 4-turn
Chrome drip bowls	●
OVEN	
Audible preheat signal	●
Bake element	4-pass
Broil element	4-pass
Interior oven light	1 incandescent
Oven racks	2
APPEARANCE	
Color appearance*	WW, BB
Handle color*	CM
Handle design	D-shaped
Knobs—color	CM
Oven door with window	●
Oven interior	Gloss black
WEIGHTS & DIMENSIONS	
Approx. shipping wt. (lbs.)	124
Overall oven interior dimensions WxHxD (in inches)	19 x 15 x 18
POWER/RATINGS	
Bake wattage	2,000W
Broil wattage	3,400W
Amp rating 240V/208V	40
KW rating 240V/208V	10.6/8.0

*WW = White with white glass door, BB = Black with black glass door, CM = Color-matched.

DIMENSIONS AND INSTALLATION INFORMATION

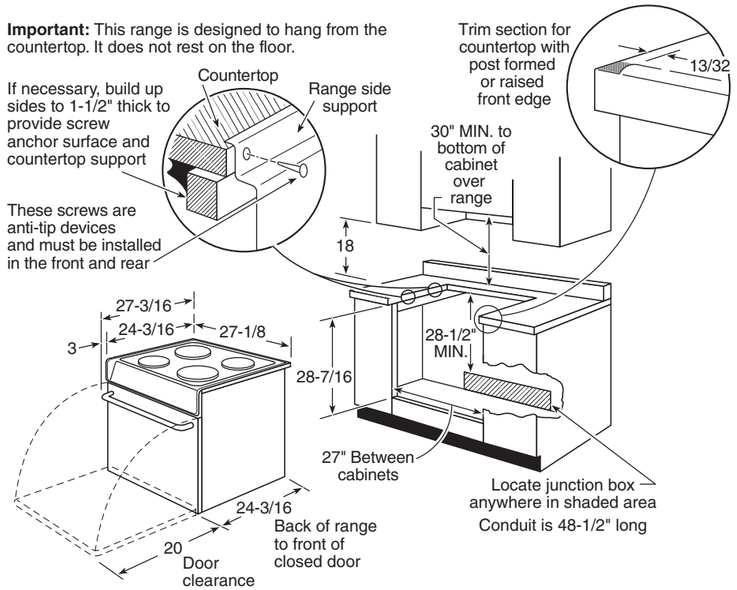

Note: All 27" drop-in electric ranges conform to UL requirements for minimum spacing between range and side wall below countertop.

Note: Door handle protrudes 3" from door face. Cabinets and drawers on adjacent 45° and 90° walls should be placed to avoid interference with the handle.

Installation information: Before installing, consult installation instructions packed with product for current dimensional data.

Optional backguard
(Available at additional cost)
JX27RBK = Black
JX27RWH = White

COUNTERTOP CUTOUT DIMENSIONS

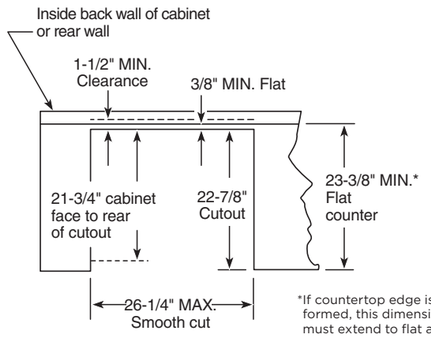

*If countertop edge is formed, this dimension must extend to flat area.

In replacement installation, use JX27R optional backguard, if required.



All GE ranges are equipped with an Anti-Tip device. The installation of this device is an important, required step in the installation of the range.

Listed by Underwriters Laboratories

Above illustrations intended for dimensional reference only. Refer to photography for actual product appearance.

See page 274 for warranty information.

30" SLIDE-IN ELECTRIC RANGES

	GE PROFILE™				GE		
		INDUCTION					
	PHS93XYP	PHS930YP PHS930BP	PSS93YP PSS93BP	PS960YP	JSS86SP	JS760SP JS760EP JS760FP JS760DP	JS645SL JS645EL JS645FL JS645DL
UFAS/ADA compliant	●	●	●	●	●	●	●
California Prop 65	●	●	●	●	●	●	●
FEATURES							
Capacity (cu. ft.) upper/lower	5.3	5.3	5.3	2.2/4.4	5.3	5.3	5.3
Cleaning system	Steam Clean	Self-clean with Steam Clean option	Steam Clean	Self-clean with Steam Clean option	Steam Clean	Self-clean with Steam Clean option	Self-clean
Cooking technology	True Convection with Precise Air	True Convection with Precise Air	True Convection with Precise Air	Upper: Traditional Lower: True Convection with Precise Air	True Convection	Convection	Traditional
CONTROLS							
Sabbath mode	●	●	●	●	●		●
Sabbath mode*						●	
Control lock capability	●	●	●	●	●	●	●
Electronic oven controls	●	●	●	●	●	●	●
Delay bake	●	●	●	●	●	●	●
Digital temperature display	●	●	●	●	●	●	●
Hot surface lights	●	●	●	●	●	●	●
WiFi Connect**	●	●	●	●			
Chef Connect	●	●	●	●			
Guided Cooking	●***	●***					
Sous vide	●***	●***					
COOKTOP							
Element—left front	8" 2,500W Sync Element	8" 2,500W Sync Element	8"/5" 1,900W Bridge	8"/5" 1,900W Sync Element	9"/6" 3,100W Power Boil	9"/6" 3,100W Power Boil	9"/6" 3,100W Power Boil
Element—left rear	8" 2,500W Sync Element	8" 2,500W Sync Element	8" 2,000W Bridge	8" 2,000W Sync Burner	6" 1,200W	6" 1,200W	6" 1,200W
Element—right front	11" 3,700W Power Boil	11" 3,700W Power Boil	12"/9"/6" 3,600W Power Boil	12"/9"/6" 3,000W Power Boil	12"/9" 3,000W	12"/9" 3,000W	9"/6" 3,100W Power Boil
Element—right rear	6" 1,800W	6" 1,800W	6" 1,200W	6" 1,200W	6" 1,200W	6" 1,200W	6" 1,200W
Element—center	6" 100W Warming Zone	6" 100W Warming Zone	6" 100W Warming Zone	6" 100W Warming Zone	6" 100W Warming Zone	6" 100W Warming Zone	
Melt	●	●	●	●	●	●	●
OVEN							
Audible preheat signal	●	●	●	●	●	●	●
Auto Recipe Conversion	●	●	●	●	●	●	
True Convection with Precise Air	●	●	●	●	●		
Convection bake	●	●	●	●	●	●	
Convection roast	●***	●***	●***	●***	●	●	
Bake element	Hidden	Hidden	Hidden	Hidden	Hidden	Hidden	4-pass
Broil element	●	8-pass	●	8-pass	●	8-pass	6-pass
Drawer	Storage	Storage	Storage			Storage	Storage
Fast preheat	●	●	●	●	●	●	
Interior oven light	1 halogen	1 halogen	1 halogen	Upper: 1 halogen Lower: 1 halogen	1 halogen	1 halogen	1 Incandescent
Temperature probe	●	●	●	●			
No-preheat air fry	●***	●***	●***	●***		●	
No-preheat modes†	5***	5**	5***	1/5***			
Proof modes	●	●	●	●			
Self-clean oven racks	●	●	●	●			
Oven racks	3 heavy-duty	3 heavy-duty	3 heavy-duty	3 heavy-duty	3	3	2
APPEARANCE							
Ceramic-glass cooktop	●	●	●	●	●	●	●
Color appearance††	FS	FS TS	FS TS	FS	SS	SS ES DS WW, BB	SS ES DS WW
Handle color††	SS	FS TS	FS TS	SS	SS	SS SS TS CM	SS SS TS CM
Knobs—weighted						●	●
Knobs—color††	SS	FS TS	FS TS	SS	SS	SS SS TS CM	SS SS TS CM
Oven interior	Black	Black	Black	Black	Black	Black	Black
WEIGHTS & DIMENSIONS							
Approx. shipping wt. (lbs.)	221	221	221	259	191	200	178
Overall oven interior dimensions (WxHxD in inches)	24-1/8 x 19-1/2 x 19-3/8	24-1/8 x 19-1/2 x 19-3/8	24-1/8 x 19-1/2 x 19-3/8	Upper: 24 x 8-7/8 x 18 Lower: 24 x 17-1/2 x 18-1/4	Upper: 24 x 8-7/8 x 18 Lower: 24 x 17-1/2 x 18-1/4	24-1/8 x 19-1/2 x 19-3/8	24-1/8 x 19-1/4 x 19-1/2
POWER/RATINGS							
Bake wattage	2,850W	2,850W	2,850W	Upper: 2,650W Lower: 2,650W	2,650W upper/ 2,650W lower	2,850W	2,585W
Broil wattage	3,800W	4,000W	3,800W	Upper: 3,000W Lower: 3,600W	3,000W upper/ 3,600W lower	4,000W	3,410W
Convection wattage	2,500W	2,500W	2,500W	2,500W	1,500W	2,500W	
Amp rating 240V/208V	40	40	40	40	40	40	40
KW rating 240V/208V	115.5/11.6	12.5/10.4	115.5/11.6	16.0/12.0	13.6/10.2	13.6/10.2	12.1/9.1
ACCESSORIES							
Trim kit	JXFILLR1BB	JXFILLR1BB JXFILLR1DD	JXFILLR1BB JXFILLR1BB	JXFILLR1BB	JXFILLR1BB	JXFILLR1BB JXFILLR1BB JXFILLR1DD JXFILLR1BB	JXFILLR1BB JXFILLR1BB JXFILLR1DD JXFILLR1BB

*See use and care manual for required accessory.
**WiFi router required.
***WiFi-enabled feature.
†No-preheat modes include baked goods, frozen pizza single rack, frozen pizza multi rack, frozen snack single rack, frozen snack multi rack.
††SS = Stainless, FS = Fingerprint Resistant Stainless, TS = Black stainless, ES = Slate, DS = Black Slate, WW = White, BB = Black, CM = Color-matched.

See page 274 for warranty information.

MICROWAVE OVENS

		GE PROFILE™	
		EXTRA-LARGE	
		PES7227SL PES7227BL PES7227EL PES7227FM PES7227DL	JES2251SJ
UFAS/ADA compliant*		●/●	
California Prop 65		●	●
CAPACITY			
Oven cavity (cu. ft.)		2.2	2.2
FEATURES			
Watts (IEC-705 test procedure)		1,100	1,200
Inverter technology			●
Electronic touch controls		●	●
Scrolling display with Help pad		●	●
Demo mode		●	
Electronic digital display with clock		●	●
Display On/Off		●	●
Sensor controls	Popcorn	●	
	Beverage	●	
	Lunch/Snack		●
	Reheat	●	●
	Vegetable	●	
	Potato	●	
	Breakfast		●
	Dinner plate		●
Express Cook		1–6 min.	
Warming control			●
Instant On controls		●	
Time Cook		I & II	I & II
Add 1 Minute			●
"Add 30 seconds" button		●	
Auto/Time Defrost			●
Weight/Time Defrost		●	
Power levels		10	10
Turntable		Recessed	●
Turntable diameter (in.)		16-1/2	16
Timer on/off		●	●
Delay Start			●
Cooking complete reminder		●	
Control lockout		●	●
APPEARANCE			
Color appearance**		SS TS ES DS WW, BB	SS
Case color**		Gray Gray Gray Gray CM	SS
WEIGHTS & DIMENSIONS			
Approx. shipping weight (lbs.)		51	40
Dimensions (WxHxD in inches)	Cavity	17-5/16 x 11-1/16 x 19-1/16	18-1/2 x 11 x 18-1/2
	Exterior***	24-1/8 x 14 x 19-3/4	24 x 13-3/4 x 19-1/2
POWER/RATINGS			
Input Volt/Hz		120/60	120/60
Electric input @ 120V	Watts	1,650	1,650
	Amperage	13.9	13.9
ACCESSORIES			
Cooking guide label		●	●
Right-angle plug		●	

*Model can be UFAS/ADA compliant in countertop or built-in configuration. For built-in, please see information for individual model.
**SS = Stainless, TS = Black Stainless, ES = Slate, DS = Black Slate, WW = White on white, BB = Black on black, CM = Color-matched.
***Exterior dimensions: height includes feet, depth does not include handle.

The wave guide cover is a thin specialized sheet consisting of mica material which covers the outlet where microwaves are emitted for cooking. Microwaves pass freely through this cover while it prevents steam and food particles from entering the magnetron area during cooking. **This cover is not to be removed or altered**. Doing so may void the product's warranty.

Location of wave guide cover will vary per model.

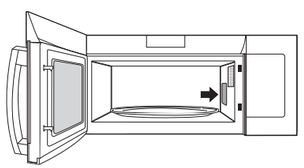

		GE		
		EXTRA-LARGE	FAMILY-SIZE	
		JES2051SN JES2051DN	JES1657SM JES1657BM JES1657DM	JES1460DS
California Prop 65		●	●	●
CAPACITY				
Oven cavity (cu. ft.)		2.0	1.6	1.4
FEATURES				
Watts (IEC-705 test procedure)		1,200	1,150	1,100
Electronic touch controls		●	●	●
Scrolling display with Help pad		●		
Demo mode		●		
Electronic digital display with clock		●	●	●
Display On/Off		●		●
Sensor controls	Popcorn	●	●	●
	Beverage	●	●	●
	Reheat	●	●	●
	Vegetable	●	●	●
	Potato	●	●	●
	Chicken/Fish	●		●
Convenience controls	Cook		●	
Express Cook		1–6 min.	1–6 min.	1–6 min.
Instant On controls		●	●	●
Time Cook		I & II	I & II	I & II
"Add 30 seconds" button		●	●	●
Auto/Time Defrost		●	●	●
Power levels		10	10	10
Turntable		●	●	Recessed
Turntable diameter (in.)		16	13-5/8	12-5/8
Kitchen timer/Timer on/off		– / ●	– / ●	– / ●
Delay Start/Reminder		●		
Cooking complete reminder		●	●	●
Control lockout		●	●	●
APPEARANCE				
Color appearance*		SS WW, BB	SS TS WW,BB	WW, BB
Case color*		Black CM	SS Black White, Black	CM
WEIGHTS & DIMENSIONS				
Approx. shipping weight (lbs.)		55	44	38
Dimensions (WxHxD in inches)	Cavity	16-3/4 x 11-1/4 x 18-1/8	16-5/8 x 10-1/4 x 16-3/4	14-3/4 x 9-7/8 x 16-1/4
	Exterior**	23-7/8 x 13-5/8 x 19-1/4	21-3/4 x 12-13/16 x 17-11/16	21-7/8 x 12-1/2 x 16-3/8
POWER/RATINGS				
Input Volt/Hz		120/60	120/60	120/60
Electric input @ 120V	Watts	1,650	1,650	1,600
	Amperage	13.9	13.9	13.5
ACCESSORIES				
Cooking guide label		●	●	●

*SS = Stainless, WW = White on white, BB = Black on black, CM = Color-matched.
**Exterior dimensions: height includes feet, depth does not include handle.

Above illustrations intended for dimensional reference only.
Refer to photography for actual product appearance.

See page 274 for warranty information.

MICROWAVE OVENS (CONT.)

		GE				
		MID-SIZE				
		JES1145SH JES1145DL JES1145DM	JES1097SM	JES1095SM JES1095BM JES1095DM	JEM3072SH JEM3072DH	JES1072SH JES1072DM
California Prop 65		●	●	●	●	●
CAPACITY						
Oven cavity (cu. ft.)		1.1	0.9	0.9	0.7	0.7
FEATURES						
Watts (IEC-705 test procedure)		950	900	900	700	700
Electronic touch controls		●	●	●	●	●
Electronic digital display with clock		●	●	●	●	●
Convenience controls	Popcorn	●	●	●	●	●
	Beverage	●	●	●	●	●
	Reheat	●	●	●	●	●
	Vegetable	●	●	●		
	Potato	●	●	●	●	●
	Pizza	●	●	●		
Express Cook		1–6 min.	●	●	1–6 min.	1–6 min.
Instant On controls		●	●	●	●	●
Time Cook		I & II	●	●	I & II	I & II
"Add 30 seconds" button		●	●	●	●	●
Auto/Time Defrost		●	●	●	●	●
Power levels		10	10	10	10	10
Turntable		●	●	●	●	●
Turntable diameter (in.)		12-3/4	10.5	10.5	9-5/8	10-3/4
Kitchen timer/Timer on/off		● / –	● / ●	● / ●	– / ●	– / ●
Delay Start/Reminder		– /●			– /●	– /●
Cooking complete reminder		●	– /●	●	●	●
Control lockout		●			●	●
WiFi Connect			●			
APPEARANCE						
Color appearance*		SS/WW/BB	SS	SS/TS/WW, BB	SS/WW, BB	SS/WW, BB
Case color*		Black/CM/CM	Gray	Gray/Gray/WW/BB	Black/CM	Black/CM
WEIGHTS & DIMENSIONS						
Approx. shipping weight (lbs.)		34	30	30	24	24
Dimensions (WxHxD in inches)	Cavity	13-7/8 x 9-1/2 x 14-1/8	13-2/3 x 8-2/3 x 12-2/5	13-2/3 x 8-2/3 x 12-2/5	12-1/4 x 7-7/8 x 11-5/8	12-1/4 x 7-7/8 x 11-5/8
	Exterior**	20-5/16 x 12 x 15-5/8	19 x 11-1/2 x 14-1/2	19 x 11-1/2 x 14-1/2	17-1/4 x 10-1/8 x 13	17-5/16 x 10-3/16 x 12-3/4
POWER/RATINGS						
Input Volt/Hz		120/60	120/60	120/60	120/60	120/60
Electric input @ 120V	Watts	1,580	1,050	1,050	1,050	1,050
	Amperage	13.7	9.5	9.5	9.3	9.3
ACCESSORIES						
Cooking guide label		●	●	●	●	●
Optional hanging kit					JXA019K***	
Right-angle plug					●	

*SS = Stainless, TS = Black Stainless, WW = White on white, BB = Black on black, CM = Color-matched.
**Exterior dimensions: height includes feet, depth does not include handle.
***Part No. JXA019K is available at additional cost.

UNDERCABINET MOUNTING KIT (PART NO. JXA019K) FOR MICROWAVE OVEN MODEL JEM3072

(Sold separately)

Not to be used over a thermal oven.

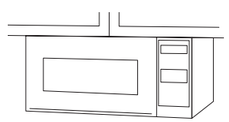

Undercabinet Installation

Install Spacemaker II microwave ovens in just a few easy steps with the mounting template, which provides all the necessary measurements. These microwave ovens can be installed on practically any wood or metal cabinets. Installation may vary depending on cabinets.

Note: 120V, 60-cycle, grounded power receptacle location optional on back within cabinet opening.

CUTOUT DIMENSIONS

This information is not intended to be used for installing unit described. Before installing, consult installation instructions packed with product/kit for current dimensional data.

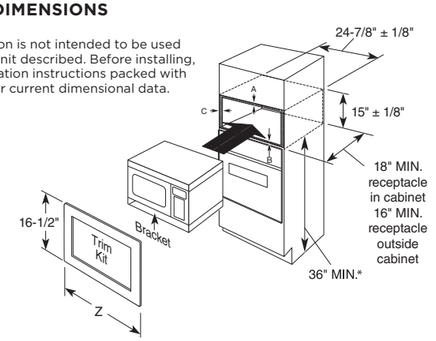

Cabinet overlap requirements	30"	27"
A - Overlap of trim kit over top of cabinet	3/4"	3/4"
B - Overlap of trim kit over bottom of cabinet	5/8"	5/8"
C - Overlap of trim kit over sides of cabinet	2-1/2"	1"

Note:
Allow an additional inch of clearance beyond trim frame on all sides

*For ADA compliance, the microwave must be installed no higher than 48".

Above illustrations intended for dimensional reference only.
Refer to photography for actual product appearance.

See page 274 for warranty information.

30" SLIDE-IN ELECTRIC RANGES

DIMENSIONS AND INSTALLATION INFORMATION
MODELS PS960, PSS93, PHS93X, PHS930, JS760, JSS86, JS645

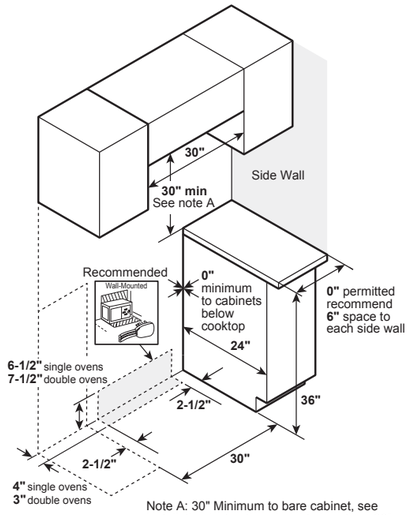

Note A: 30" Minimum to bare cabinet, see installation instructions heights less than 30"

MODELS PHS93X, PHS930, JS760, JS645

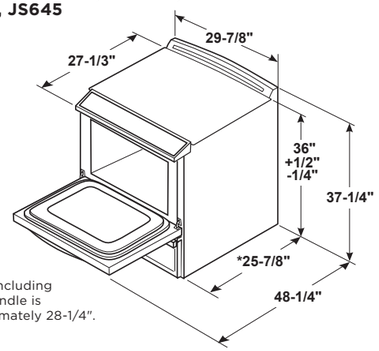

*Depth including door handle is approximately 28-1/4".

MODEL PS960 , JSS86

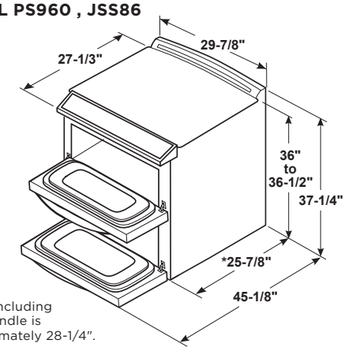

*Depth including door handle is approximately 28-1/4".

Listed by Underwriters Laboratories

All GE ranges are equipped with an Anti-Tip device. The installation of this device is an important, required step in the installation of the range.

Above illustrations intended for dimensional reference only. Refer to photography for actual product appearance.

See page 274 for warranty information.

30" SLIDE-IN GAS RANGES

	GE PROFILE™			GE		
		DUAL-FUEL				
	PGS960YP	P2S930YP	PGS930YP PGS930BP	JGSS86SP	JGS760SP JGS760EP JGS760FP JGS760DP	JGSS66SEL JGSS66EEL JGSS66FEL
UFAS/ADA compliant	●	●	●	●	●	●
California Prop 65	●	●	●	●	●	●
FEATURES						
Capacity (upper/lower)	2.4/4.3	5.7	5.6	6.7	5.6	5.3
Cleaning system	Self-clean with Steam Clean option	Self-clean with Steam Clean option	Self-clean with Steam Clean option	Steam Clean	Self-clean with Steam Clean option	Steam Clean
Cooking technology	Upper: Traditional Lower: Convection	Convection	Convection	Upper: Traditional Lower: Convection	Convection	Traditional
CONTROLS						
Sabbath mode	●	●	●	●		●
Sabbath mode*					●	
Control lock capability	●	●	●	●	●	●
Electronic oven controls	Glass touch	Glass touch	Glass touch	●	Electronic	Electronic
Delay bake	●			●		
Digital temperature display	●	●	●	●	●	●
Electronic clock & timer	●	●	●	●	●	●
Ignition	Electronic	Electronic	Electronic	Electronic	Electronic	Electronic
Self-clean latch	Auto	Auto	Auto		Auto	
WiFi Connect**	●	●	●			
Chef Connect	●	●	●			
COOKTOP						
Burner—left front	21,000 BTU Tri-ring	21,000 BTU Tri-ring	21,000 BTU Tri-ring	18,000 BTU Power Boil	18,000 BTU Power Boil	15,000 BTU Power Boil
Burner—left rear	5,000 BTU Simmer	5,000 BTU Simmer	5,000 BTU Simmer	5,000 BTU Simmer	5,000 BTU Simmer	5,000 BTU Simmer
Burner—right front	15,000 BTU Power Boil	15,000 BTU Power Boil	15,000 BTU Power Boil	15,000 BTU	15,000 BTU Power Boil	15,000 BTU Power Boil
Burner—right rear	9,500 BTU	9,500 BTU	9,500 BTU	9,500 BTU	9,500 BTU	9,500 BTU
Burner—center	9,500 BTU dual oval	9,500 BTU dual oval	9,500 BTU dual oval	10,000 BTU oval	10,000 BTU oval	10,000 BTU oval
Cooktop burners	Sealed	Sealed	Sealed	Sealed	Sealed	Sealed
Deep-recessed cooktop	●	●	●	●	●	●
Griddle/grill	Reversible integrated griddle/grill	Reversible integrated griddle/grill	Reversible integrated griddle/grill	Non-stick cast-iron griddle	Non-stick griddle	Non-stick griddle
OVEN						
Audible preheat signal	●	●	●	●	●	●
Auto Recipe Conversion	●	●	●		●	
True European Convection with Precise Air		●				
Convection bake	●	●	●		●	
Convection roast	●***	●***	●***		●	
Drawer		Storage	Storage	●	Storage	Storage
In-oven broiling	●	●	●	●†	●	●
Interior oven light	●	●	●	●	●	●
Temperature probe	●	●	●			
No-preheat air fry	●***	●***	●***		●	
Proof mode	Lower oven	●	●			
No-preheat modes†	3/5***	5***	5***			
Self-clean oven racks	●	●	●			
Oven racks	3 heavy-duty	3 heavy-duty	3 heavy-duty	2	3	2
APPEARANCE						
Color appearance††	FS	FS	FS/TS	SS	SS/ES/DS/WW, BB	SS/ES/DS
Control panel appearance††	SS	SS	SS/TS	SS	SS/ES/DS/WW/BB	SS/ES/DS/WW/BB
Cooktop††	SS	SS	SS/TS	SS	SS/DD/DD/CM	DD/DD/DD
Grates	Black matte edge-to-edge	Black matte edge-to-edge	Black matte edge-to-edge	Black matte continuous	Black matte continuous	Black matte continuous
Grate material	Cast iron	Cast iron	Cast iron	Cast iron	Cast iron	Cast iron
Handle color††	FS	FS	FS/TS	SS	SS/SS/TS/CM	SS/SS/TS
Handle design	Designer-style	Designer-style	Designer-style	Designer-style	Designer-style	Designer-style
Knobs—color††	FS	FS	FS/TS	SS	SS/SS/TS/CM	SS/SS/TS
Oven interior	Black	Black	Black	Black	Black	Gray
WEIGHTS & DIMENSIONS						
Approx. shipping wt. (lbs.)	291	256	244	291	244	214
Overall oven interior dimensions (WxHxD in inches)	Upper: 24 x 9-1/2 x 19-1/8; Lower: 24 x 15 x 20-5/8	24 x 19 x 20-5/8	24 x 19-1/2 x 20-5/8	24 x 19-1/2 x 19-1/2	24 x 19-1/2 x 20-5/8	24 x 19 x 19
POWER/RATINGS						
Bake (000's BTU) Nat./LP	Upper: 7.0/7.0 Lower: 14.0/13.5	2,850W	16.0/16.0	Upper: 7.0/7.0 Lower: 14.0/13.5	16.0/16.0	16.0/16.0
Broil (000's BTU) Nat./LP	Upper: 120V/120V Lower: 16.5/13.5	4,000W	16.5/13.5	Upper: 120V/120V Lower: 16.5/13.5	16.5/13.5	16.5/13.5
Burners (000's BTU) Natural gas/LP	(1) 18.0 (1) 15.0 (2) 9.5 (1) 8.0 (1) 5.0	(1) 18.0 (1) 15.0 (2) 9.5 (1) 8.0 (1) 5.0	(1) 18.0 (1) 15.0 (2) 9.5 (1) 8.0 (1) 5.0	(1) 18.0 (1) 15.0 (1) 10.0/8.0 (1) 9.5 (1) 5.0	(1) 18.0 (1) 15.0 (1) 10/8.0 (1) 9.5 (1) 5.0	(1) 15.0 (1) 15.0 (1) 10/8.0 (1) 9.5 (1) 5.0
Gas range electrical rating†††	120V; 60Hz; 15A	208/240V; 60Hz; 30A	120V; 60Hz; 15A	120V; 60Hz; 15A	120V; 60Hz; 15A	120V; 60Hz; 15A
LP conversion kit (included)	●	●	●	●	●	●
ACCESSORIES						
Trim kit	JXFILLR1SS	JXFILLR1SS	JXFILLR1SS JXFILLR1DD	JXFILLR1DD	JXFILLR1SS JXFILLR1DD JXFILLR1DD JXFILLR1DD, JXFILLR1BB	JXFILLR1DD JXFILLR1DD JXFILLR1DD
Reversible cast-iron griddle/grill	(included)	(included)	(included)	JXGRILL1	JXGRILL1	JXGRILL1
Non-stick aluminum griddle	WB31X24738	WB31X24738	WB31X24738	WB31X24738	(included)	(included)
Center grate	(included)	(included)	(included)	JXGRATE1	JXGRATE1	JXGRATE1

*See use and care manual for required accessory.
**WiFi router required. *JGS760DPWW use JXFILLR1SS; JGS760DPBB use JXFILLR1BB.
***WiFi-enabled feature.
†No-preheat modes include baked goods, frozen pizza single rack, frozen pizza multi rack, frozen snack single rack, frozen snack multi rack.
††SS = Stainless, FS = Fingerprint Resistant Stainless, TS = Black Stainless, ES = Slate, DS = Black Slate, WW = White with white glass door, BB = Black with black glass door, CM = Color-matched, DD = Dark Dorian.
†††15A requires a dedicated circuit.
Factory set for natural gas. A set of LP orifices is included with each range for LP conversion.

See page 274 for warranty information.

30" SLIDE-IN GAS RANGES

DIMENSIONS AND INSTALLATION INFORMATION
MODEL PGS960, PGS930, JGSS86, JGS760, JGSS66

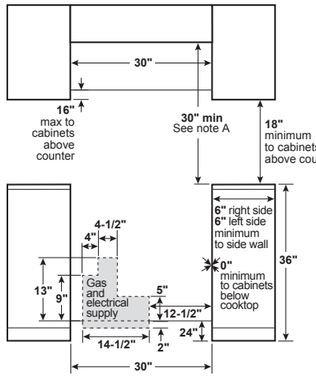

Note A: 30" Minimum to bare cabinet, see installation instructions heights less than 30"

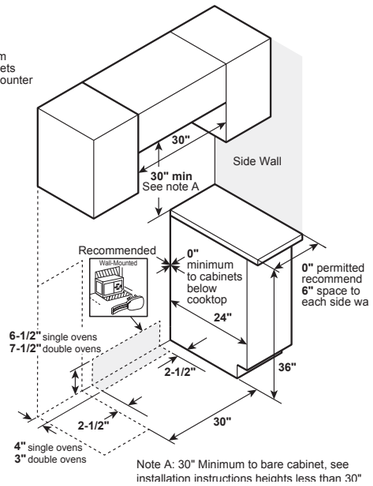

Note A: 30" Minimum to bare cabinet, see installation instructions heights less than 30"

DIMENSIONS AND INSTALLATION INFORMATION
MODEL P2S930

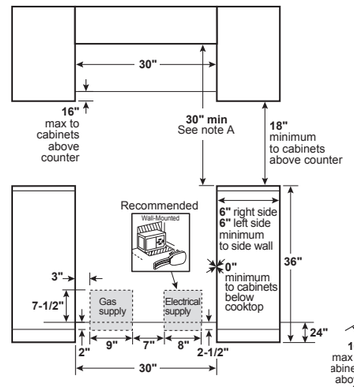

Note A: 30" Minimum to bare cabinet, see installation instructions heights less than 30"

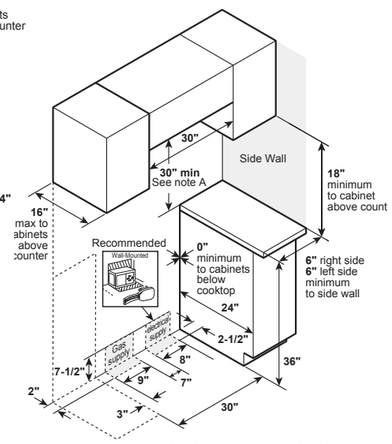

Note A: 30" Minimum to bare cabinet, see installation instructions heights less than 30"

MODEL PGS960

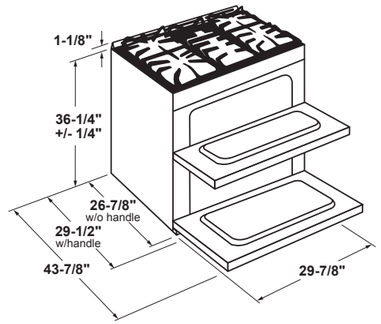

MODELS P2S930, PGS930, JGS760

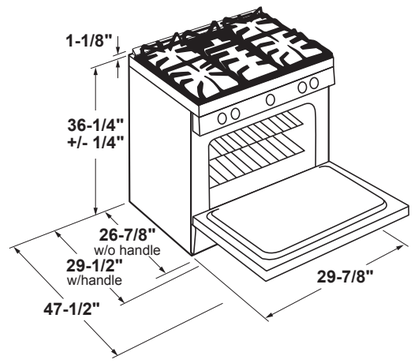

MODEL JGSS66

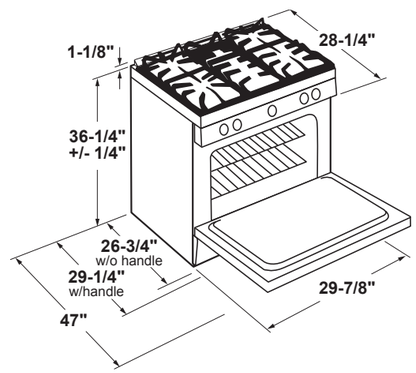

All GE ranges are equipped with an Anti-Tip device. The installation of this device is an important, required step in the installation of the range.

Listed by Underwriters Laboratories

See page 274 for warranty information.

Above illustrations intended for dimensional reference only. Refer to photography for actual product appearance.

30" FREE-STANDING SMOOTHTOP ELECTRIC RANGES

	GE PROFILE™ PB965YP PB965BP
FEATURES	
Capacity (cu. ft.) upper/lower	2.2/4.4
Cleaning system	Self-clean with Steam Clean option
Cooking technology	Upper: Traditional Lower: True Convection with Precise Air
CONTROLS	
Certified Sabbath mode	●
Control lock capability	●
Electronic touch controls	●
Electronic oven controls	●
WiFi Connect*	●
Chef Connect	●
Delay bake	●
Digital temperature display	●
Hot surface lights	●
COOKTOP	
Element—left front	9"/6" 3100W Power Boil
Element—left rear	6" 1200W
Element—right front	12"/9"/6" 3000W Power Boil
Element—right rear	6" 1200W
Element—center	6" 80W Warming Zone
Melt	●
OVEN	
Audible preheat signal	●
Auto Recipe Conversion	●
True Convection with Precise Air	●
No-preheat air fry	●
Convection roast	●
Fast preheat	●
Interior oven light	●
Self-clean oven racks	●
Oven racks	3 heavy-duty
Bake element	●
Broil element	Upper: 6-Pass Lower: 8-Pass
APPEARANCE	
Backguard**	SS wrap TS
Ceramic-glass cooktop	Black
Color appearance**	FS TS
Handle color**	SS TS
Handle design	Profile
Knobs—weighted	●
Knobs—color**	SS TS
Oven interior	Black gloss
WEIGHTS & DIMENSIONS	
Approx. shipping wt. (lbs.)	240
Overall oven interior dimensions (WxHxD in inches)	Upper: 24 x 8-7/8 x 18-1/4 Lower: 24 x 17-1/2 x 18-1/4
POWER/RATINGS	
Bake wattage	Upper: 2,650W Lower: 2,650W
Broil wattage	Upper: 3,000W Lower: 3,600W
Convection wattage	2,500W
Amp rating 240V/208V	40
KW rating 240V/208V	16.0/12.0

*WiFi router required.
**SS=Stainless, FS = Fingerprint Resistant Stainless, TS = Black Stainless.

DIMENSIONS AND INSTALLATION INFORMATION (IN INCHES)
MODEL PB965

ACCEPTABLE ELECTRICAL OUTLET AREA:

Use a flush mount outlet receptacle. Orient the receptacle so the length is parallel to the floor.

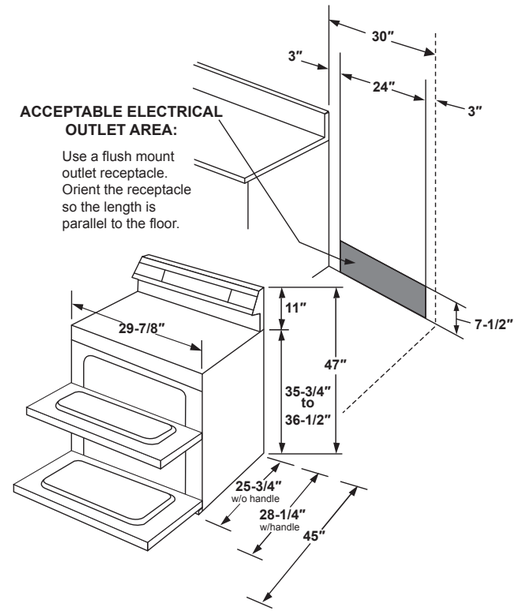

All GE ranges are equipped with an Anti-Tip device. The installation of this device is an important, required step in the installation of the range.

Listed by Underwriters Laboratories

See page 274 for warranty information.

Above illustrations intended for dimensional reference only. Refer to photography for actual product appearance.

30" FREE-STANDING SMOOTHTOP ELECTRIC RANGES

	GE PROFILE™	GE					
	PB935YP PB935BP	JBS86SP	JB735SP JB735EP JB735FP JB735DP	JB655SK JB655YK JB655EK JB655FK JB655DK	JB645RK JB645EK JB645FK JB645DK	JB625RK JB625DK	JBS60RK JBS60DK
California Prop 65	●	●	●	●	●	●	●
FEATURES							
Capacity (cu. ft.) up/low	5.3	2.2 / 4.4	5.3	5.3	5.3	5.3	5.3
Cleaning system	Self-clean with Steam Clean option	Steam Clean	Self-clean with Steam Clean option	Self-clean	Self-clean	Self-clean	
Cooking technology	Convection with Precise Air	Upper: Traditional Lower: Convection	Convection	Convection	Traditional	Traditional	Traditional
CONTROLS							
Sabbath mode		●		●	●	●	●
Sabbath mode*	●		●				
Control lock capability	●	●	●	●	●	●	●
Electronic touch controls	●	●					
Electronic oven controls	●	●	●	●	●	●	●
WiFi Connect**	●						
Delay bake	●	●	●	●	●	●	●
Digital temp. display	●	●	●	●	●	●	●
Hot surface lights	●	●	1	1	1	1	1
Self-clean latch				●	●	●	
COOKTOP							
Element—left front	8"/5" 1900W	9"/6" 3,100W Power Boil	9"/6" 3,100W Power Boil	9"/6" 3,100W Power Boil	9"/6" 3,100W Power Boil	6" 1,200W	6" 1,200W
Element—left rear	8" 2000W	6" 1,200W	6" 1,200W	6" 1,200W	6" 1,200W	8" 2,000W	8" 2,000W
Element—right front	12"/9"/6" 3,600W Power Boil	12"/9" 3,000W	12"/9" 3,000W	12"/9" 3,000W	9"/6" 3,100W Power Boil	8" 2,500W Power Boil	9"/6" 3,100W Power Boil
Element—right rear	6" 1200W	6" 1,200W	6" 1,200W	6" 1,200W	6" 1,200W	6" 1,200W	6" 1,200W
Element—center	6" 80W warming zone	6" warming zone	6" warming zone	6" warming zone			
Melt	●	●	●	●	●	●	●
OVEN							
Audible preheat signal	●	●	●	●	●	●	●
Auto Recipe Conversion	●		●	●			
True Convection with Precise Air	●						
Convection bake	●	Lower	●	●			
Convection roast	●	Lower	●				
No-preheat air fry	●		●				
Drawer	Storage		Storage	Storage	Storage	Storage	Storage
Dual-element bake	●	●	●	●	●	●	●
Fast preheat	●		●				
Interior oven light	●	Upper: 1 incandescent Lower: 1 halogen	1 halogen	1 incandescent	1 incandescent	1 incandescent	1 incandescent
Oven racks	3	3	2	2	2	2	2
Bake element	Hidden	Upper: 8-Pass Lower: 6 pass	Hidden	4-pass	4-pass	4-pass	4-pass
Broil element	6-pass	Upper: 6-pass Lower: 6-pass	6-pass	6-pass	4-pass	4-pass	4-pass
APPEARANCE							
Backguard***	SS wrap/TS	SS wrap	SS/ES/DS/CM	SS overlay/ES/CM	SS overlay/ES/CM	SS overlay/CM	SS overlay/CM
Ceramic-glass cooktop	Black	Black	Black Black Black Pat. white, Black	Black Black Black Black Pat. white, Black	Black Gray Gray Pat. white, Black	Black Pat. white, Black	Black Pat. white, Black
Color appearance***	FS/TS	SS with gray	SS with gray/ ES/DS/WW, BB	SS with gray/FS/ ES/DS/WW, BB	SS with black/ ES/DS/WW, BB	SS with black/ WW, BB	SS with black/ WW, BB
Handle color***	SS/TS	SS	SS/SS/SS/CM	SS/SS/SS/TS/CM	SS/SS/TS/CM	SS/CM	SS/CM
Handle design	Designer-style	Designer-style	Designer-style	Designer-style	Designer-style	Designer-style	Designer-style
Knobs—weighted	●						
Knobs—color***	SS/TS	SS	SS/SS/SS/SS/CM	SS/SS/CM	SS/SS/CM	BB/CM	BB/CM
Oven interior	Black gloss	Black	Black gloss	Black gloss	Gray	Gray	Gray
WEIGHTS & DIMENSIONS							
Approx. shipping wt. (lbs.)	180	226	181	171	179	180	161
Overall oven interior dimensions (WxHxD in inches)	24-1/8 x 19-1/2 x 19-3/8	24 x 17-1/2 x 18-1/4	24-1/8 x 19-1/2 x 19-3/8	24-1/8 x 19-1/2 x 19-3/8	24-1/8 x 19-1/4 x 19-1/2	24-1/8 x 19-1/2 x 19-3/8	24-1/8 x 19-1/2 x 19-3/8
POWER/RATINGS							
Bake wattage	2,585W	Upper: 2,500W Lower: 2,650W	2,850W	2,585W	2,585W	2,585W	2,585W
Broil wattage	4,000W	Upper: 2,500W Lower: 3,600W	3,800W	3,800W	3,410W	3,410W	3,410W
Convection wattage	1,500W						
Amp rating 240V/208V	40	40	40	40	40	40	40
KW rating 240V/208V	12.1 / 9.1	15.6 / 11.7	12.5 / 9.4	12.4 / 9.3	12.1 / 9.1	10.4 / 7.8	11.0 / 8.3

*See use and care manual for required accessory.
**WiFi router required.
***SS = Stainless, FS=Fingerprint Resistant Stainless, TS = Black Stainless, ES = Slate, DS = Black Slate, WW = White with white glass door, BB = Black with black glass door, CM = Color-matched.

See page 274 for warranty information.

DIMENSIONS AND INSTALLATION INFORMATION

MODELS PB935, JB735, JB655, JB645, JB625 AND JBS60

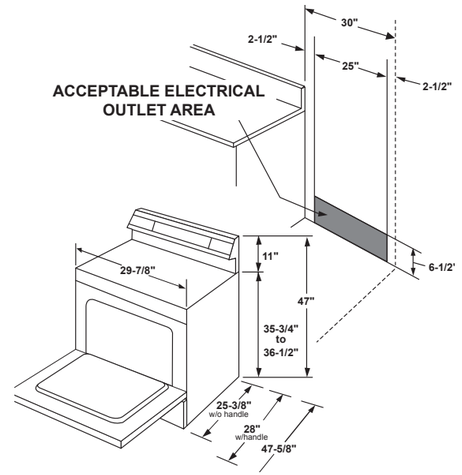

MODELS JBS86 AND JB860

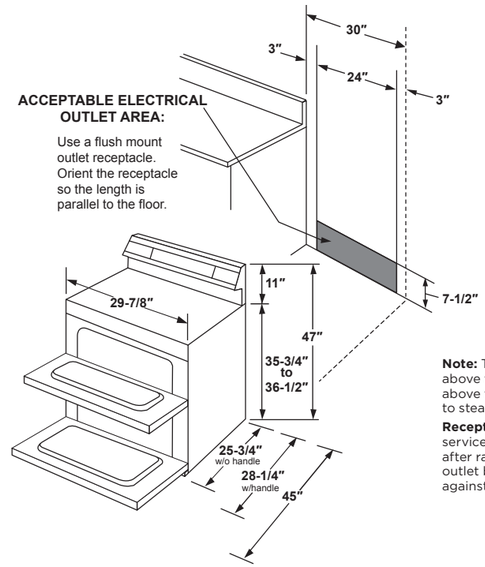

Note: This appliance has been approved for 0" spacing to adjacent surfaces above the cooktop. However, a 6" minimum spacing to surfaces less than 15" above the cooktop and adjacent cabinet is recommended to reduce exposure to steam, grease splatter and heat.

Receptacle locations: For 30" free-standing ranges, locally approved flexible service cord or conduit must be used because terminals are not accessible after range installation. See shaded area drawing for location of electrical outlet box. Recommended outlet locations allow range to be installed directly against wall.

All GE ranges are equipped with an Anti-Tip device. The installation of this device is an important, required step in the installation of the range.

Listed by Underwriters Laboratories

Above illustrations intended for dimensional reference only.
Refer to photography for actual product appearance.

See page 274 for warranty information.

30" AND 24" FREE-STANDING COIL AND SMOOTHTOP ELECTRIC RANGES

	GE						
	JB258RM JB258DM	JB256RM JB256DM	JB480SM JB480DM	JBS460DM	JBS360RM JBS360DM	JBS160DM	24" RANGE JAS640RM
UFAS/ADA compliant			●	●			●
California Prop 65	●	●	●	●	●	●	●
FEATURES							
Capacity (cu. ft.) upper/lower	5.3	5.0	5.0	5.0	5.0	5.0	2.9
Cleaning system	Self-clean	Self-clean	Self-clean				Steam Clean
Cooking technology	Traditional	Traditional	Traditional	Traditional	Traditional	Traditional	Traditional
CONTROLS							
Sabbath mode	●	●	●	●	●		●
Control lock capability	●	●		●	●		
Electronic oven controls	●	●		●	●		●
Delay bake	●	●					●
Digital temperature display	●	●		●	●		●
Hot surface lights	2	1	1	●	1		1
Self-clean latch	●	●	●				
COOKTOP							
Element—left front	6" 1,250W Temp Limiting Coil	6" 1,250W Temp Limiting Coil	6" 1,500W	6" 1,250W Temp Limiting Coil	6" 1,250W Temp Limiting Coil	6" 1,250W Temp Limiting Coil	6" 1,200W
Element—left rear	8" 2,400W Temp Limiting Coil	8" 2,400W Temp Limiting Coil	8" 2,000W	8" 2,400W Temp Limiting Coil	8" 2,400W Temp Limiting Coil	8" 2,400W Temp Limiting Coil	8" 2,000W
Element—right front	8" 2,400W Temp Limiting Coil	8" 2,400W Temp Limiting Coil	8" 2,000W	8" 2,400W Temp Limiting Coil	8" 2,400W Temp Limiting Coil	8" 2,400W Temp Limiting Coil	8" 2,000W
Element—right rear	6" 1,250W Temp Limiting Coil	6" 1,250W Temp Limiting Coil	6" 1,500W	6" 1,250W Temp Limiting Coil	6" 1,250W Temp Limiting Coil	6" 1,250W Temp Limiting Coil	6" 1,200W
Drip bowls	Black Chrome, Black	Black Chrome, Black	Chrome, Black	Chrome, Black	Black Chrome, Black	Chrome, Black	
OVEN							
Audible preheat signal	●	●					●
Drawer	Storage	Storage	Storage	Storage	Storage	Storage	Storage
Dual-element bake	●	●	●	●	●	●	●
Interior oven light	1 incandescent	1 incandescent	1 incandescent	1 incandescent	1 incandescent	1 incandescent	1 incandescent
Oven racks	2	2	2	2	2	2	2
Bake element	6-pass	4-pass	4-pass	4-pass	4-pass	4-pass	4-pass
Broil element	6-pass	4-pass	4-pass	4-pass	4-pass	4-pass	4-pass
APPEARANCE							
Backguard*	SS overlay CM	SS with black CM	SS with black CM	CM	SS with black CM	CM	SS overlay
Ceramic-glass cooktop			Black				Black
Color appearance*	SS WW, CC, BB	SS WW, BB	SS with black WW, BB	WW, BB	SS with black WW, BB	WW, BB	SS
Handle color*	SS CM	SS CM	SS CM	CM	SS CM	CM	SS
Handle design	Designer-style	Designer-style	Designer-style	D-shaped	Designer-style	Designer-style	Designer-style
Knobs—color*	BB CM	BB CM	BB CM	CM	BB CM	CM	SS
Oven interior	Gray	Gray	Gray	Gray	Gray	Gray	Gray
WEIGHTS & DIMENSIONS							
Approx. shipping wt. (lbs.)	175	170	172	150	160	150	135
Overall oven interior dimensions (WxHxD in inches)	24-1/8 x 19-1/2 x 19-3/8	23-3/4 x 19 x 18-1/2	23-3/4 x 19 x 18-1/2	22-3/4 x 19 x 18-1/2	23-3/4 x 19 x 18-1/2	23-3/4 x 19 x 18-1/2	19 x 15-3/8 x 17-1/8
POWER/RATINGS							
Bake wattage	3,410W	2,585W	2,585W	2,585W	2,585W	2,585W	2,700W
Broil wattage	3,800W	3,410W	3,410W	3,410W	3,410W	3,410W	3,000W
Amp rating 240V/208V	40	40	40	40	40	40	40
KW rating 240V/208V	12.1 / 9.1	11.7 / 8.8	12.1 / 9.1	10.2 / 7.7	12.6 / 9.9	12.6 / 9.9	10.5 / 8.1

*SS=Stainless, WW=White with white glass door, CC=Bisque with bisque glass door, BB=Black with black glass door, CM=Color-matched.

DIMENSIONS AND INSTALLATION INFORMATION

MODEL JB258

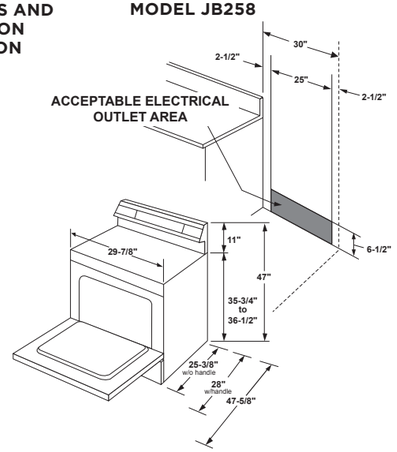

MODEL JB256

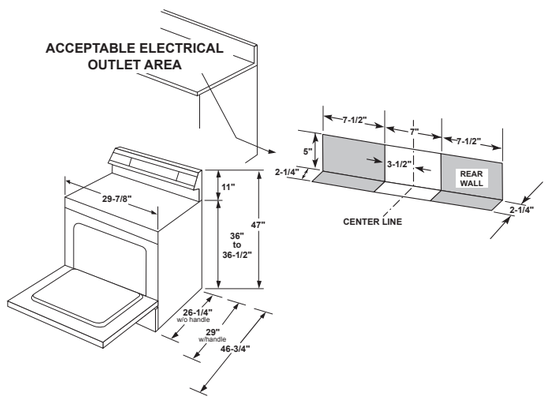

Above illustrations intended for dimensional reference only. Refer to photography for actual product appearance.

See page 274 for warranty information.

30" AND 24" FREE-STANDING COIL AND SMOOTHTOP ELECTRIC RANGES

DIMENSIONS AND INSTALLATION INFORMATION

MODELS JBS460, JBS360, JBS160

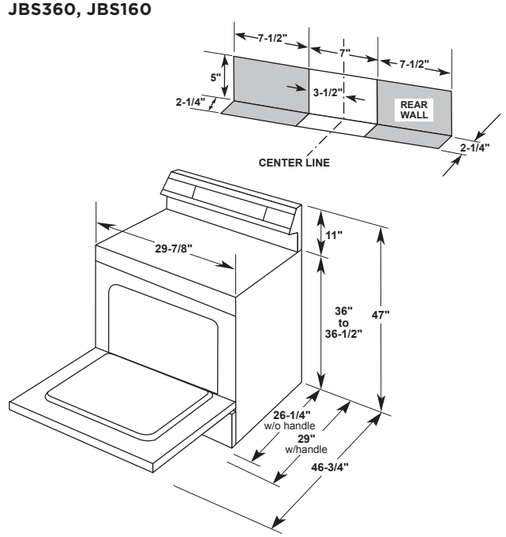

MODEL JAS640

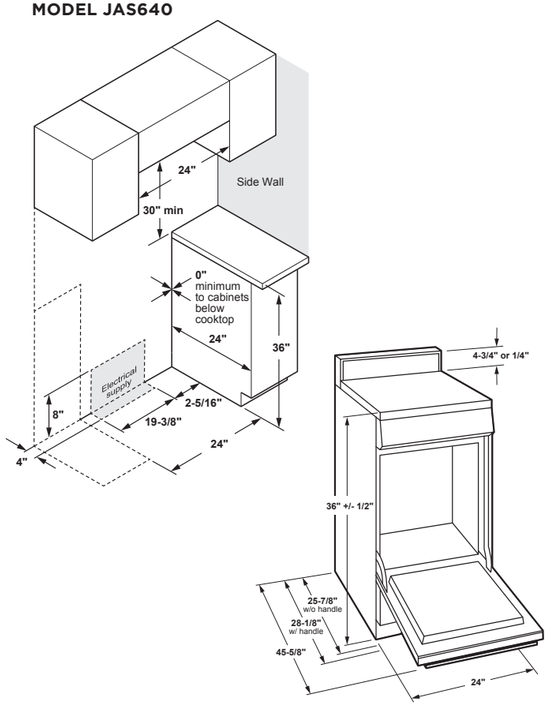

MODEL JB480

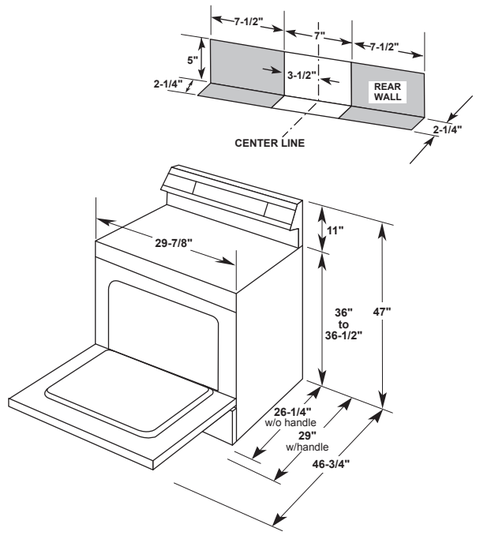

Wall Mounted

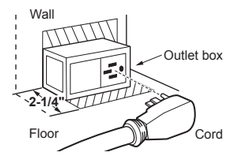

Recommended acceptable electrical outlet area. Orient the electrical receptacle so the length is parallel to the floor.

Note: This appliance has been approved for 0" spacing to adjacent surfaces above the cooktop. However, a 6" minimum spacing to surfaces less than 15" above the cooktop and adjacent cabinet is recommended to reduce exposure to steam, grease splatter and heat.

Receptacle locations: For free-standing ranges, locally approved flexible service cord or conduit must be used because terminals are not accessible after range installation. See shaded area drawing for location of electrical outlet box. Recommended outlet locations allow range to be installed directly against wall.

Above illustrations intended for dimensional reference only. Refer to photography for actual product appearance.

All GE ranges are equipped with an Anti-Tip device. The installation of this device is an important, required step in the installation of the range.

Listed by Underwriters Laboratories

See page 274 for warranty information.

30" FREE-STANDING GAS RANGES

	GE PROFILE™			GE		
	PGB965YP PGB965BP	**P2B935YP**	**PGB935YP PGB935BP**	**JGBS86SP**	**JGB735SP JGB735EP JGB735FP JGB735DP**	**JGB660YP JGB660SP JGB660EP JGB660FP JGB660DP**
California Prop 65	●	●	●	●	●	●
FEATURES						
Capacity (upper/lower)	2.5/4.3	5.7	5.6	2.5/4.3	5.0	5.0
Cleaning system	Self-clean with Steam Clean option	Self-clean with Steam Clean option	Steam Clean	Steam Clean	Self-clean with Steam Clean option	Self-clean with Steam Clean option
Cooking technology	Upper: Traditional Lower: True Convection	Convection	Convection	Upper: Traditional Lower: Convection	Convection	Traditional
CONTROLS						
Sabbath mode	●	●		●		
Sabbath mode*			●		●	●
Control lock capability	●	●	●	●	●	●
Electronic oven controls	●			●	●	●
WiFi Connect**	●	●	●			
Delay bake	●	●	●		●	●
Digital temperature display					●	●
Electronic clock & timer					●	●
Ignition	Electronic	Electronic	Electronic	Electronic	Electronic	Electronic
Self-clean latch	●	●	●		●	●
COOKTOP						
Burner—left front	18,000 BTU Power Boil	20,000 BTU multi-ring burner	20,000 BTU multi-ring burner	15,000 BTU	18,000 BTU Power Boil	18,000 BTU Power Boil
Burner—left rear	5,000 BTU Precise Simmer	5,000 BTU	5,000 BTU	5,000 BTU Precise Simmer	5,000 BTU Precise Simmer	5,000 BTU Precise Simmer
Burner—right front	20,000 BTU tri-ring	18,000 BTU Power Boil	18,000 BTU Power Boil	15,000 BTU	9,500 BTU	9,500 BTU
Burner—right rear	9,500 BTU	9,500 BTU	9,500 BTU	12,000 BTU	12,000 BTU	12,000 BTU
Burner—center	10,000 BTU dual oval	10,000 BTU oval	10,000 BTU oval	10,000 BTU oval	10,000 BTU oval	10,000 BTU oval
Cooktop burners	Sealed	Sealed	Sealed	Sealed	Sealed	Sealed
Deep-recessed cooktop	●	●	●	●	●	●
Griddle	Reversible cast-iron griddle/grill	Reversible cast-iron griddle/grill	Reversible cast-iron griddle/grill	Non-stick	Non-stick	
Melt/Simmer	●	●	●	●	●	●
OVEN						
Audible preheat signal	●	●	●	●	●	●
Auto Recipe Conversion	●	●	●	●	●	
Convection bake	●	●	●	●	●	
Convection roast	●	●	●	●	●	
No-preheat air fry	●	●	●		●	
Drawer		Storage	Storage		Storage	Storage
In-oven broiling		●	●		●	●
Interior oven light	Incandescent	Incandescent	Incandescent	Incandescent	Incandescent	Incandescent
Oven racks	3	3	3	3	2	2
APPEARANCE						
Backguard***	SS wrap/TS	SS wrap	SS wrap/TS	SS wrap	SS wrap/DS/ES/CM	FS/SS wrap/ES/DS/CM
Color appearance***	FS/TS	FS	FS/TS	SS	SS with gray/ES/DS/ WW, BB	SS with gray/ SS with gray/ES/DS/ WW, BB
Cooktop**	DD/DD	DD	DD/DD	SS	DD/DD/DD/CM	DD/DD/DD/DD/CM
Grates	Black matte edge-to-edge	Black matte edge-to-edge	Black matte edge-to-edge	Black matte edge-to-edge	Black matte edge-to-edge	Black matte edge-to-edge
Grate material	Cast iron	Cast iron	Cast iron	Cast iron	Cast iron	Cast iron
Handle color***	SS/TS	SS	SS/TS	SS	SS/SS/TS/CM	SS/SS/SS/TS/CM
Handle design	Designer-style	Designer-style	Designer-style	Designer-style	Designer-style	Designer-style
Knobs—color***	SS/TS	SS	SS/TS	SS	SS/SS/TS/CM	SS/SS/SS/TS/CM
One-piece upswept cooktop	●	●	●	●	●	●
Oven interior	Black	Black	Black	Black	Gray	Gray
WEIGHTS & DIMENSIONS						
Approx. shipping wt. (lbs.)	242	225	225	225	210	215
Overall oven interior dimensions (WxHxD in inches)	Upper: 24 x 9-1/2 x 19-1/8 Lower: 24 x 15 x 20-5/8	24 x 19 x 20-5/8	24 x 19 x 20-5/8	Upper: 24 x 9-1/2 x 19-1/8 Lower: 24 x 15 x 20-5/8	24 x 19 x 19	24 x 19 x 19
POWER/RATINGS						
Bake (000's BTU) Nat/LP	Upper: 7.0/7.0 Lower: 14.0/13.5	2,585W	16.0/16.0	Upper: 7.0/7.0 Lower: 14.0/13.5	16.0/16.0	16.0/16.0
Broil (000's BTU) Nat/LP	Upper: 120V/120V Lower: 16.5/13.5	3,410W	10.0/10.0	Upper: 120V/120V Lower: 16.5/13.5	13.5/12.0	13.5/12.0
Burners (000's BTU) LP	18.0/5.0/18.0/9.5/8.0	20.0(15.0)/5.0/9.5/ 18.0/10.0(8.0)	20.0(15.0)/5.0/9.5/ 18.0/10.0(8.0)	15.0/5.0/9.5/12.0/10.0	18.0/5.0/9.5/12.0/8.0	18.0/5.0/9.5/12.0/8.0
Gas range electrical rating+	120V, 60Hz; 15A	240V, 60Hz, 30A	120V, 60Hz, 15A	120V, 60Hz, 15A	120V, 60Hz, 15A	120V, 60Hz, 15A
LP conversion kit (included)	●	●	●	●	●	●

*See use and care manual for required accessory.
**WiFi router required.
***SS = Stainless, FS = Fingerprint Resistant Stainless, TS = Black Stainless, ES = Slate, DS = Black Slate, WW = White with white glass door, BB = Black with black glass door, CM = Color-matched, DD = Dark Dorian.
†15A requires a dedicated circuit.
Factory set for natural gas. A set of LP orifices is included with each range for LP conversion.

All GE ranges are equipped with an Anti-Tip device. The installation of this device is an important, required step in the installation of the range.

Gas self-clean range Anti-Tip bracket (part no. 205C1714P001)

See page 274 for warranty information.

30" FREE-STANDING GAS RANGES

DOUBLE OVEN DIMENSIONS MODELS PGB965, JGBS86

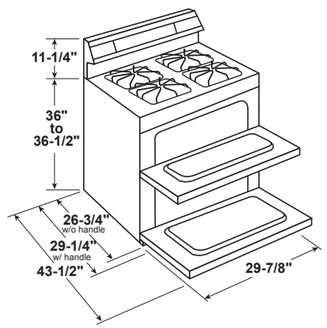

SINGLE OVEN DIMENSIONS MODELS P2B935, PGB935

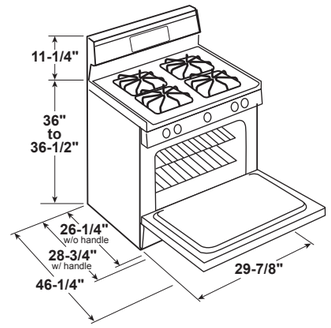

GAS PIPE AND ELECTRICAL OUTLET LOCATIONS DOUBLE AND SINGLE OVEN MODELS

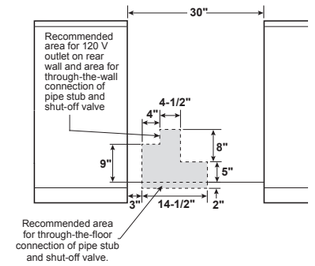

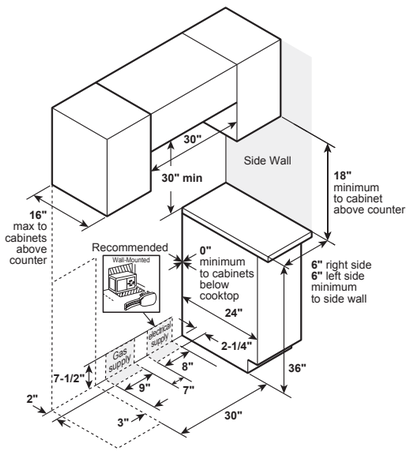

Above illustrations intended for dimensional reference only. Refer to photography for actual product appearance.

GAS PIPE AND ELECTRICAL OUTLET LOCATIONS MODEL P2B935

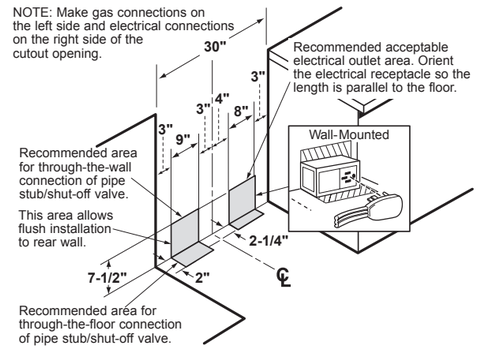

INSTALLATION INFORMATION DOUBLE AND SINGLE OVEN MODELS

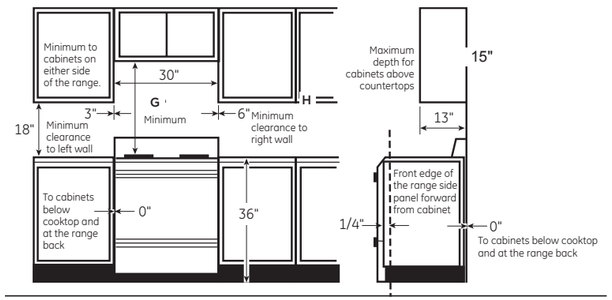

MODEL	G	H
P2B935	6"	6"
PGB935	6"	6"
JGB660	6"	3"

See page 274 for warranty information.

30" AND 24" FREE-STANDING GAS RANGES

	GE							24" RANGE
	JGB645SEK	JGB635REK JGB635DEK	JGBS66REK JGBS66EEK JGBS66FEK JGBS66DEK	JGBS61RP JGBS61DP	JGBS60REK JGBS60DEK	JGBS30REK JGBS30DEK	JGBS10DEM	JGAS640RM
UFAS/ADA compliant						●	●	●
California Prop 65	●	●	●	●	●	●	●	●
FEATURES								
Capacity	5.0	5.0	5.0	5.0	4.8	4.8	4.8	2.9
Cleaning system	Self-clean	Self-clean	Steam Clean	Standard-clean	Standard-clean	Standard-clean	Standard-clean	Steam Clean
Cooking technology	Traditional	Traditional	Traditional	Traditional	Traditional	Traditional	Traditional	Traditional
CONTROLS								
Sabbath mode*	●	●	●	●	●	●	●	●
Control lock capability		●	●	●	●			
Electronic oven controls	●	●	●	●	●			
Delay bake		●	●	●	●			
Digital temperature display	●	●	●	●	●			
Electronic clock & timer	●	●	●	●	●		●	
Ignition	Electronic	Electronic	Electronic	Electronic	Electronic	Electronic	Electronic	Electronic
Self-clean latch	●	●						
COOKTOP								
Burner—left front	15,000 BTU	9,500 BTU	15,000 BTU	9,500 BTU	9,500 BTU	9,500 BTU	9,100 BTU	9,500 BTU
Burner—left rear	5,000 BTU	9,500 BTU	5,000 BTU	9,500 BTU	9,500 BTU	9,500 BTU	9,100 BTU	9,500 BTU
Burner—right front	9,500 BTU	13,000 BTU	9,500 BTU	13,000 BTU	13,000 BTU	13,000 BTU	9,100 BTU	15,000 BTU
Burner—right rear	12,000 BTU	5,000 BTU	12,000 BTU	5,000 BTU Precise Simmer	5,000 BTU	5,000 BTU	9,100 BTU	5,000 BTU
Burner—center			10,000 BTU					
Cooktop burners	Sealed	Sealed	Sealed	Sealed	Sealed	Sealed	Sealed	Sealed
Deep-recessed cooktop	●		●					
Griddle			Non-stick					
OVEN								
Audible preheat signal		●	●	●	●			
Drawer	Storage	Storage	Broiler	Broiler	Broiler	Broiler	Broiler	Storage
In-oven broiling	●	●						●
Interior oven light	1 incandescent	1 incandescent	1 incandescent	1 incandescent	1 incandescent	1 incandescent	1 incandescent	1 incandescent
Oven racks	2	2	2	2	2	2	2	2
APPEARANCE								
Backguard**	SS	SS CM	SS CM DS CM	SS CM	SS CM	SS CM	CM	CM
Color appearance**	SS	SS with black WW, BB	SS ES DS WW, BB	SS with black WW, BB	SS WW, CC, BB	SS WW, BB	WW, BB	SS with black
Grates	2-piece, edge-to-edge black matte	Black matte	Edge-to-edge black matte	Edge-to-edge black matte	Black matte	Black gloss	Black gloss	Black matte
Grate material	Cast iron	Heavy steel	Cast iron	Cast iron	Heavy steel	Heavy steel	Steel	Cast iron
Handle color**	SS	SS CM	SS SS TS CM	SS CM	SS CM	SS CM	CM	SS
Handle design	Designer-style	Designer-style	Designer-style	Designer-style	Designer-style	Designer-style	Designer-style	Designer-style
Knobs—color**	CM	BB CM	SS SS TS CM	SS CM	BB CM	BB CM	CM	SS
One-piece upswept cooktop	●	●	●	●	●	●	●	●
Oven interior	Gray	Gray	Gray	Gray	Gray	Gray	Gray	Gray
WEIGHTS & DIMENSIONS								
Approx. shipping wt. (lbs.)	210	210	172	172	172	171	165	120
Overall oven interior dimensions (WxHxD in inches)	24 x 19 x 19	24 x 19 x 19	24 x 18-1/2 x 19	24 x 18-1/2 x 19	24 x 19 x 19	24 x 18-1/2 x 19	24 x 18-1/2 x 19	19 x 15-3/8 x 17-1/8
POWER/RATINGS								
Bake (000's BTU) Nat./LP	16.0/16.0	16.0/16.0						
Broil (000's BTU) Nat./LP	13.5/12.0	13.5/12.0	18.0/16.0	18.0/16.0	18.0/16.0	18.0/16.0	18.0/16.0	13.0/13.0
Burners (000's BTU) LP	12.0 9.5 15.0 5.0	9.5 9.5 11.0 5.0	15.0 12.0 9.5 5.0 8.0	(1) 15.0 (1) 12.0 (1) 9.5 (1) 5.0	9.5 9.5 11.0 5.0	(1) 12.0 (2) 9.5 (1) 5.0	8.0 8.0 8.0 8.0	9.5 9.5 15.0 5.0
Gas range electrical rating***	120v; 60Hz/ 15A	120v; 60Hz/ 15A	120v; 60Hz/ 15A	120v; 60Hz/ 15A	120v; 60Hz/ 15A	120v; 60Hz/ 15A	120v; 60Hz/ 15A	120v, 60Hz, 15A
LP conversion kit (included)	●	●	●	●	●	●	●	●

*See use and care manual for required accessory.
**SS = Stainless, TS = Black Stainless, ES = Slate, DS = Black Slate, WW = White with white glass door, CC = Bisque with bisque glass door, BB = Black with black glass door, CM = Color-matched.
***15A requires a dedicated circuit.
Factory set for natural gas. A set of LP orifices is included with each range for LP conversion.

See page 274 for warranty information.

30" AND 24" FREE-STANDING GAS RANGES

DIMENSIONS

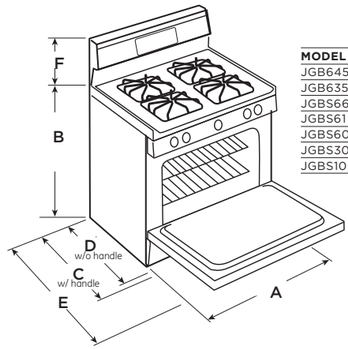

MODEL	A	B	C	D	E	F
JGB645	29-7/8"	36" to 36-1/2"	28-3/4"	26-1/4"	46-1/4"	11-1/4"
JGB635	29-7/8"	36" to 36-1/4"	28-3/4"	26-1/4"	46-1/4"	10-1/4"
JGBS66	29-7/8"	36" to 36-1/2"	28-3/4"	26-1/4"	46-1/4"	11-1/4"
JGBS61	29-7/8"	36" to 36-1/2"	28-3/4"	26-1/4"	46-1/4"	11-1/4"
JGBS60	29-7/8"	36" to 36-1/4"	28-3/4"	26-1/4"	46-1/4"	10-1/4"
JGBS30	29-7/8"	36" to 36-1/2"	28-3/4"	26-1/4"	46-1/4"	10-1/4"
JGBS10	29-7/8"	36" to 36-1/2"	28-3/4"	26-1/4"	46-1/4"	10-1/4"

DIMENSIONS (IN INCHES) MODEL JGAS640

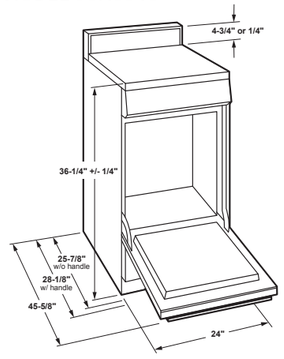

GAS PIPE AND ELECTRICAL OUTLET LOCATIONS

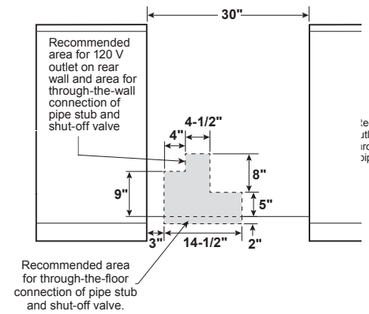

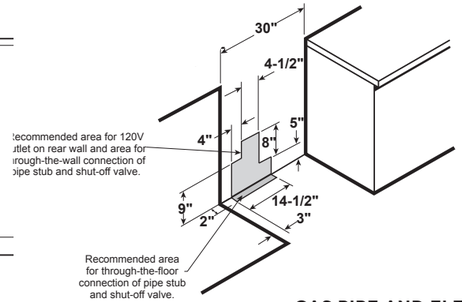

INSTALLATION INFORMATION

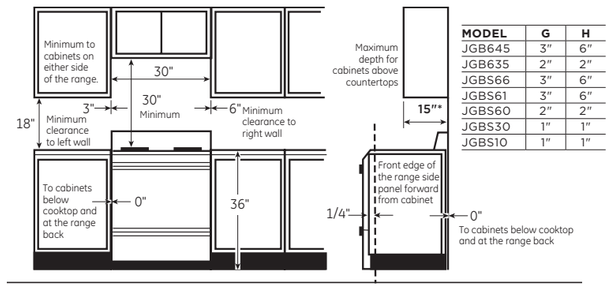

MODEL	G	H
JGB645	3"	6"
JGB635	2"	2"
JGBS66	3"	6"
JGBS61	3"	6"
JGBS60	2"	2"
JGBS30	1"	1"
JGBS10	1"	1"

Optional gas range accessory drip pans for sealed and standard traditional burner models are available at additional cost.
Will not work on continuous grate models. To order these accessory drip pans, call toll-free 800-626-2000.

Installation Information:
Before installing, consult installation instructions packed with product for current dimensional data. There must be a minimum of 30" between unprotected cabinets above a free-standing gas range and countertops.

Above illustrations intended for dimensional reference only. Refer to photography for actual product appearance.

CAUTION

To prevent drafts from affecting burner operation, seal all openings in floor and wall.

GAS PIPE AND ELECTRICAL OUTLET LOCATIONS MODEL JGAS640

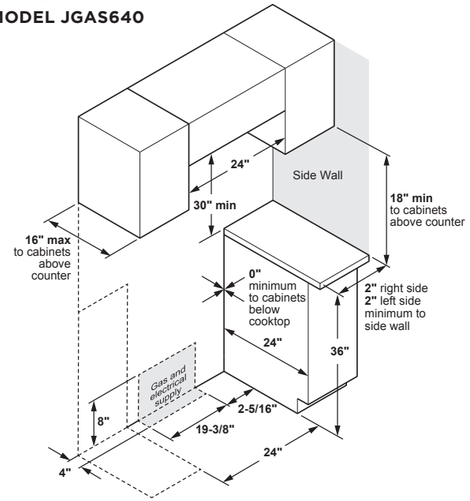

All GE ranges are equipped with an Anti-Tip device. The installation of this device is an important, required step in the installation of the range.
Gas self-clean range Anti-Tip bracket (part no. 205C1714P001)

See page 274 for warranty information.

ADVANTIUM® OVER-THE-RANGE OVENS

		GE PROFILE™	
		PSA9240SF	PSA9120SF*
AHAM certified		●	●
FEATURES			
Capacity (cu. ft.)		1.7	1.7
Watts—microwave (IEC-705 test procedure)		975 W	925 W
Cooking modes	Speedcook	●	●
	True European Convection	●	●
	Microwave	●	●
	Warming	●	●
CONTROLS			
Sensor controls	Beverage	●	●
	Defrost: Weight/Time	●	●
	Popcorn	●	●
	Potato	●	●
	Reheat	●	●
CONTROLS TOUCHPAD			
"Add 30 seconds" button		●	●
Control lockout		●	●
Custom recipe saver		●	●
Electronic touch controls		Dial glass touch	Dial glass touch
Preprogrammed menu items		●	●
OVEN			
Interior/cooktop lighting		Halogen	Halogen
Oven racks		2 (2 positions)	2 (2 positions)
Turntable		●	●
Turntable diameter (in.)		13-1/2	13-1/2
APPEARANCE			
Color appearance**		SS with gray	SS with gray
Handle color**		SS	SS
Handle design		Designer-style	Designer-style
Oven interior**		SS	SS
Touchpad		Gray	Gray
WEIGHTS & DIMENSIONS			
Approx. shipping wt. (lbs.)		104	94
Overall oven interior dims. (WxHxD in inches)		21-5/9 x 9-6/15 x 14-1/4	21-5/9 x 9-6/15 x 14-1/4
POWER/RATINGS			
Exhaust vent fan		300 CFM	300 CFM
Input Volt/Hertz		240/208V/60Hz	120V/60Hz
Input Amps/Watts (max.)		30/6,300	15/1,800
ACCESSORIES			
Recirculating charcoal filter kit		JX81D (Included)	JX81D (Included)
36" filler kit		JX36B	JX36B
15" cabinetry bump kit		JX15BUMP	JX15BUMP

*Certification in process at time of printing. Please confirm latest status.
**SS = Stainless.

IMPORTANT: PLEASE READ CAREFULLY. FOR PERSONAL SAFETY, THIS APPLIANCE MUST BE PROPERLY GROUNDED TO AVOID SEVERE OR FATAL SHOCK.



DO NOT, UNDER ANY CIRCUMSTANCES, CUT, DEFORM, OR REMOVE ANY OF THE PRONGS FROM THE POWER CORD. DO NOT USE WITH AN EXTENSION CORD.

NEMA 14-30R Wall Receptacle
Ensure proper ground exists before use.

ADVANTIUM OVER-THE-RANGE OVEN DIMENSIONS MODELS PSA9240 AND PSA9120

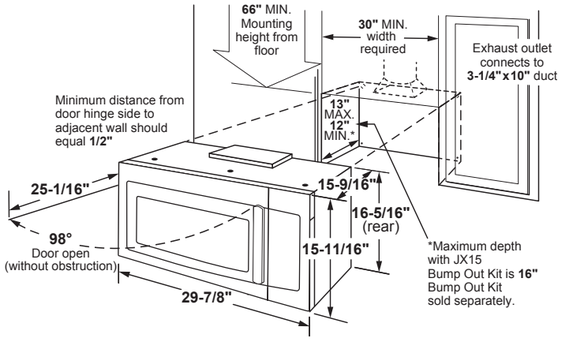

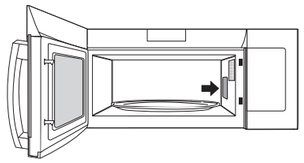

The wave guide cover is a thin specialized sheet consisting of mica material which covers the outlet where microwaves are emitted for cooking. Microwaves pass freely through this cover while it prevents steam and food particles from entering the magnetron area during cooking. **This cover is not to be removed or altered.** Doing so may void the product's warranty.

Location of wave guide cover will vary per model.

Above illustrations intended for dimensional reference only.
Refer to photography for actual product appearance.

See page 274 for warranty information.

OVER-THE-RANGE MICROWAVE OVENS

		GE PROFILE			
		PVM9179SK PVM9179BL PVM9179EK PVM9179FL PVM9179DK	PVM9005SJ PVM9005BL PVM9005EJ PVM9005FM	PNM9216SK	PVM9215SK
AHAM certified		●	●	●	●
California Prop 65		●	●	●	●
FEATURES					
Capacity (cu. ft.)		1.7	2.1	2.1	2.1
Watts—microwave (IEC-705 test procedure)		950 W	1,050 W	1,000 W	1,000 W
Cooking modes	Microwave	●	●	●	●
	Convection	●			
	Fast Cook	●			
Factory-set recirculation				●	
CONTROLS					
Chef Connect		●	●	●	●
Sensor controls	Beverage	●	●	●	●
	Defrost—Weight/Time	●		●	●
	Popcorn	●	●	●	●
	Potato		●		
	Reheat	●	●	●	●
CONTROLS TOUCHPAD					
"Add 30 seconds" button		●	●	●	●
Control lockout			●	●	●
Electronic touch controls		Dial touch	●	●	●
Mute On/Off		●		●	●
My Cycle		●		●	●
Steam clean		●		●	●
OVEN					
Interior/cooktop lighting		Halogen/LED	Halogen	Halogen/LED	Halogen/LED
Oven racks		1 convection, 1 wire 2 positions			
Turntable		●	●	●	●
Turntable diameter (in.)		13-3/5	14-1/4	14-1/5	14-1/5
APPEARANCE					
Color appearance*		SS with gray TS ES DS WW, BB	SS TS ES DS	SS with gray	SS with gray
Handle color*		Black Stainless SS appearance SS appearance TS CM		SS appearance	SS appearance
Handle design		Designer-style	Integrated	Designer-style	Designer-style
Oven interior		Stainless	Epoxy	Easy-clean	Easy-clean
Touchpad		Gray Gray Gray Gray White, Black	Gray	Gray	Gray
WEIGHTS & DIMENSIONS					
Approx. shipping wt. (lbs.)		81	65	66	66
Overall oven interior dimensions (WxHxD in inches)		21-5/8 x 9-3/4 x 14-1/4	23-5/32 x 10-5/32 x 15-3/16	21-15/16 x 11-5/8 x 14-9/16	21-15/16 x 11-5/8 x 14-9/16
POWER/RATINGS					
Exhaust vent fan		300 CFM	400 CFM	400 CFM	400 CFM
Input Volt/Hertz		120V/60Hz	120V/60Hz	120V/60Hz	120V/60Hz
Input Amps/Watts (max.)		15/1,550	15/1,700	15/1,580	15/1,580
ACCESSORIES					
36" filler kit		JX36B	JX36B	JX36B	JX36B
15" cabinetry bump kit		JX15BUMP	JX15BUMP	JX15BUMP	JX15BUMP

*SS = Stainless, TS = Black Stainless, ES = Slate, DS = Black Slate, WW = White on white, BB = Black on black, CM = Color-matched.

OVER-THE-RANGE MICROWAVE OVEN DIMENSIONS MODEL PVM9005

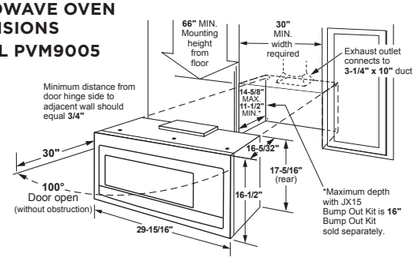

Listed by Underwriters Laboratories

OVER-THE-RANGE MICROWAVE OVEN DIMENSIONS MODELS PVM9179, PVM9215 AND PNM9216

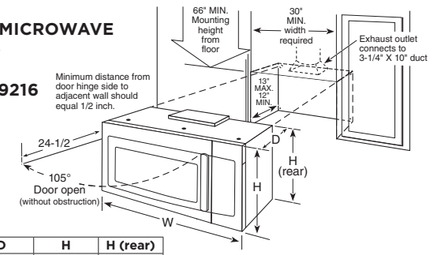

MODEL	W	D	H	H (rear)
PVM9179	29-7/8"	15-1/2"	15-3/4"	16-1/2"
PVM9215	29-3/4"	15-1/2"	16"	16-1/2"
PNM9216	29-3/4"	15-1/2"	16"	16-1/2"

Above illustrations intended for dimensional reference only.
Refer to photography for actual product appearance.

See page 274 for warranty information.

OVER-THE-RANGE MICROWAVE OVENS

		GE						
		JNM7196SK JNM7196BL JNM7196FL JNM7196DK	JVM7195SK JVM7195BL JVM7195EK JVM7195FL JVM7195DK	JVM6175SK* JVM6175YK* JVM6175BL* JVM6175EK* JVM6175DK*	JVM6172SK* JVM6172DK*	JVM3160RF JVM3160EF JVM3160DF	JNM3163RJ* JNM3163DJ*	JVM3162RJ* JVM3162DJ*
AHAM certified		●	●		●	●		
California Prop 65		●	●	●	●	●	●	●
FEATURES								
Capacity (cu. ft.)		1.9	1.9	1.7	1.7	1.6	1.6	1.6
Watts—microwave (IEC-705 test procedure)		1,000 W	1,000 W	1,000 W	1,000 W	1,000 W	1,000 W	1,000 W
Cooking mode	Microwave	●	●	●	●	●	●	●
Factory-set recirculation		●					●	
CONTROLS								
Convenience controls	Beverage				●	●	●	●
	Cook time					●	●	●
	Defrost Weight/Time				●	●	●	●
	Popcorn				●	●	●	●
	Potato				●	●	●	●
	Reheat				●	●	●	●
Sensor controls	Beverage	●	●	●				
	Melt	●	●	●				
	Defrost Weight/Time	●	●	●				
	Popcorn	●	●	●				
	Potato	●	●	●				
	Reheat	●	●	●				
CONTROLS TOUCHPAD								
"Add 30 seconds" button		●	●	●	●	●	●	●
Control lockout		●	●	●	●	●		
Electronic touch controls		●	●	●	●	●	●	●
Mute On/Off		●	●	●	●			
OVEN								
Interior/cooktop lighting		Incandescent/ Halogen	Incandescent/ Halogen	Incandescent/ Halogen	Incandescent/ Halogen	Incandescent	Incandescent	Incandescent
Turntable		●	●	●	●	●	●	●
Turntable diameter (in.)		14-1/5	14-1/5	12-4/5	12-4/5	13-1/2	12-1/2	12-1/2
APPEARANCE								
Color appearance**		SS with gray TS DS WW, BB	SS with gray TS ES DS WW, BB	SS with gray FS TS ES WW, BB	SS with gray WW, BB	SS with black ES WW, CC, BB	SS with black WW,BB	SS with black WW,BB
Handle color**		SS appearance Black Stainless TS CM	SS appearance Black Stainless SS appearance TS CM	SS appearance SS appearance Black Stainless SS appearance CM	SS appearance CM	SS appearance SS appearance CM	SS appearance CM	SS appearance CM
Handle design		Designer-style	Designer-style	Designer-style	Designer-style	Designer-style	Designer-style	Designer-style
Oven interior		Easy-clean	Easy-clean	White	White	Epoxy white	Epoxy white	Epoxy white
Touchpad		Gray Gray DD Gray White, Black	Gray Gray DD Gray White, Black	Gray Gray Gray DD White, Black	Gray White, Black	Black Gray White, Bisque, Black	Black White, Black	Black White, Black
WEIGHTS & DIMENSIONS								
Approx. shipping wt. (lbs.)		66	66	66	66	66	63	63
Overall oven interior dimensions (WxHxD in inches)		21-15/16 x 11-5/8 x 14-9/16	21-15/16 x 11-5/8 x 14-9/16	20-11/16 x 10-5/16 x 14-3/16	20-11/16 x 10-5/16 x 14-3/16	18-13/16 x 9-1/4 x 14-13/32	19-1/2 x 10-15/16 x 14-3/16	19-1/2 x 10-15/16 x 14-3/16
POWER/RATINGS								
Exhaust vent fan		400 CFM	400 CFM	300 CFM	300 CFM	300 CFM	300 CFM	300 CFM
Input Volt/Hertz		120V/60Hz	120V/60Hz	120V/60Hz	120V/60Hz	120V/60Hz	120V/60Hz	120V/60Hz
Input Amps/Watts (max.)		15/1,580	15/1,580	15/1,580	15/1,600	15/1,580	14/1,600	14/1,600
ACCESSORIES								
36" filler kit		JX36B	JX36B	JX36B	JX36B	JX36B	JX36B	JX36B
15" cabinetry bump kit		JX15BUMP	JX15BUMP	JX15BUMP	JX15BUMP	JX15BUMP	JX15BUMP	JX15BUMP

*Certification in process at time of printing. Please confirm latest status.
**SS = Stainless, FS = Fingerprint Resistant Stainless, TS = Black Stainless, ES = Slate, DS = Black Slate, SA = Silver, WW = White on white, WS = White with stainless accents, CC = Bisque on bisque, BB = Black on black, DD = Dark Dorian, CM = Color-matched.

The wave guide cover is a thin specialized sheet consisting of mica material which covers the outlet where microwaves are emitted for cooking. Microwaves pass freely through this cover while it prevents steam and food particles from entering the magnetron area during cooking. **This cover is not to be removed or altered.** Doing so may void the product's warranty.

Location of wave guide cover will vary per model.

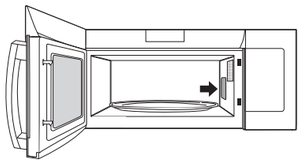

See page 274 for warranty information.

Above illustrations intended for dimensional reference only.
Refer to photography for actual product appearance.

OVER-THE-RANGE MICROWAVE OVENS

OVER-THE-RANGE MICROWAVE OVEN DIMENSIONS
ALL GE MODELS

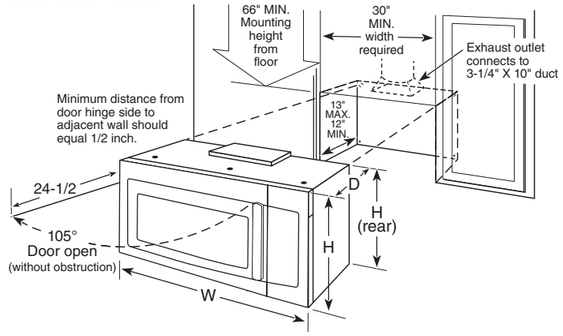

MODEL	W	D	H	H (REAR)
JNM7196/JVM7195	29-3/4"	15-1/2"	16"	16-1/2"
JVM6175	29-7/8"	15"	15-7/8"	16-1/2"
JVM6172	29-7/8"	15"	15-7/8"	16-1/2"
JNM3184	29-7/8"	16-7/16"	15-1/8"	16-1/8"
JNM3161/JVM3160	29-7/8"	15-1/4"	15-3/4"	16-1/2"
JNM3163/JVM3162	29-7/8"	15-7/8"	16"	16-7/16"

OPTIONAL ACCESSORIES
(SOLD SEPARATELY)

FILLER PANEL KIT

See below for part numbers.

When replacing a 36" range hood, this kit fills in the additional width to provide a custom built-in appearance. For installation between cabinets only; not for end-of-cabinet installation. Each kit contains two 3"-wide filler panels.

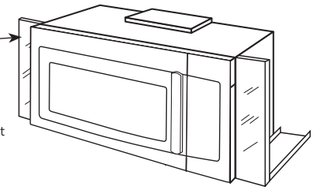

15" CABINETRY BUMP-OUT KIT (NOT SHOWN)

To be used for installation with a 15" depth cabinet. Kit is a bracket that increases the depth from the wall by 3".

VENTILATION OPTIONS

The over-the-range convection/microwave and microwave ovens are designed for adaptation to the following three types of ventilation:
Outside exhaust (Vertical—as shown above)
Outside exhaust (Horizontal)
Recirculating (Non-vented ductless—see Filter Kit Drawing, order JX81D, JX81H, JX81J, JX81L or JX81C)

Requires 120V grounded outlet. Electrical receptacle must be located in cabinet above over-the-range microwave/ convection and microwave ovens. No additional wiring, venting or cabinet rebuilding necessary in many cases. Complete detailed, easy-to-follow installation instructions and convenient full-size templates are packed with product.

Important: When installing these ovens over a range, allow minimum of 2" from bottom of microwave oven to top of range backguard to allow for removal of light covers.

MODEL	36" FILLER KIT	15" CABINETRY BUMP-OUT KIT
PSA9240SFSS	JX36BSS	JX15BUMPBB
PSA9120SFSS	JX36BSS	JX15BUMPBB
PVM9179BTLS	JX36BTS	JX15BUMPBB
PVM9179SKSS	JX36BSS	JX15BUMPBB
PVM9179EKES	JX36BES	JX15BUMPBB
PVM9179DKWW	JX36BWW	JX15BUMPWW
PVM9179DKBB	JX36BBB	JX15BUMPBB
PVM9005BLTS	JX36B	JX15BUMPBB
PVM9005SJSS	JX36B	JX15BUMPBB
PVM9005EJES	JX36B	JX15BUMPBB
PVM9215SKSS	JX36BSS	JX15BUMPBB
PNM9216SKSS	JX36BSS	JX15BUMPBB
JNM7196BLTS	JX36BTS	JX15BUMPBB
JNM7196SKSS	JX36BSS	JX15BUMPBB
JNM7196DKWW	JX36BWW	JX15BUMPWW
JVM7195BTLS	JX36BTS	JX15BUMPBB
JNM7196DKBB	JX36BBB	JX15BUMPBB
JVM7195SKSS	JX36BSS	JX15BUMPBB
JVM7195EKES	JX36BES	JX15BUMPBB
JVM7195DKWW	JX36BWW	JX15BUMPWW
JVM7195DKBB	JX36BBB	JX15BUMPBB

MODEL	36" FILLER KIT	15" CABINETRY BUMP-OUT KIT
JVM6175BLTS	JX36BTS	JX15BUMPBB
JVM6175SKSS	JX36BSS	JX15BUMPBB
JVM6175EKES	JX36BES	JX15BUMPBB
JVM6175DKWW	JX36BWW	JX15BUMPWW
JVM6175DKBB	JX36BBB	JX15BUMPBB
JVM6172SKSS	JX36BSS	JX15BUMPBB
JVM6172DKWW	JX36BWW	JX15BUMPWW
JVM6172DKBB	JX36BBB	JX15BUMPBB
JNM3163RJSS	JX36BSS	JX15BUMPBB
JNM3163DJWW	JX36BWW	JX15BUMPWW
JNM3163DJBB	JX36BBB	JX15BUMPBB
JVM3162RJSS	JX36BSS	JX15BUMPBB
JVM3162DJWW	JX36BWW	JX15BUMPWW
JVM3162DJBB	JX36BBB	JX15BUMPBB
JNM3161MFSA	JX36B	JX15BUMPBB
JVM3160RFSS	JX36B	JX15BUMPBB
JVM3160EFES	JX36B	JX15BUMPBB
JVM3160DFWW	JX36B	JX15BUMPWW
JVM3160DFCC	JX36B	JX15BUMPWW/BB
JVM3160DFBB	JX36B	JX15BUMPBB

This information is not intended to be used for installing unit described. Before installing, consult installation instructions packed with product/kit for current dimensional data.

Above illustrations intended for dimensional reference only.
Refer to photography for actual product appearance.

See page 274 for warranty information.

GE PROFILE™ STAINLESS INTERIOR DISHWASHERS

	GE PROFILE			
	PDT785SYNFS PDT785SBNTS	**PDT775SYNFS PDT775SBNTS**	**PDT715SYNFS PDT715SBNTS PDT715SMNES PDT715SFNDS**	**PDP715SYNFS PDP715SBNTS**
ENERGY STAR® certified	●	●	●	●
CEE Tier 1 qualified	●	●	●	●
Energy Factor (EF)	0.8	0.8	0.8	0.8
Normal wash gallons per cycle*	3.5	3.5	3.5	3.5
Kilowatt hrs./yr.	270	270	270	270
FEATURES				
Interior	Stainless steel	Stainless steel	Stainless steel	Stainless steel
Tub and door liner	Stainless steel	Stainless steel	Stainless steel	Stainless steel
Place settings	Up to 16	Up to 16	Up to 16	Up to 16
Front appearance	Top control	Top control	Top control	Top control
Wash system	700 Series	700 Series	700 Series	700 Series
Water filtration	100% with removable filter	100% with removable filter	100% with removable filter	100% with removable filter
Hard-food disposer	Piranha™	Piranha	Piranha	Piranha
Wash levels	Upper/middle/lower	Upper/middle/lower	Upper/middle/lower	Upper/middle/lower
Deep Clean Silverware Jets	●	●	●	●
Automatic temperature control	●	●	●	●
Clean Sensor	●	●	●	●
Rinse Aid dispenser	Rinse Aid with indicator and adjustment with sensor	Rinse Aid with indicator and adjustment with sensor	Rinse Aid with indicator and adjustment	Rinse Aid with indicator and adjustment
Clean touch controls	●	●	●	●
Sabbath/door wake-up mode	●	●	●	●
On control indicators	Clean, Sanitized, Cycle time remaining	Clean, Sanitized, Cycle time remaining	Clean, Sanitized, Cycle time remaining	Clean, Sanitized, Cycle time remaining
Status lights on door	Washing, Drying, Clean	Washing, Drying, Clean	Washing, Drying, Clean	Washing, Drying, Clean
WiFi	Built-in	Built-in	Optional (requires part no. PBX23W00Y0)	Optional (requires part no. PBX23W00Y0)
Touchpads	8	8	8	8
Cycles and options	5, 11	5, 11	5, 11	5, 11
3-digit countdown display	●	●	●	●
Last cycle memory	●	●	●	●
Audible end-of-cycle signal	●	●	●	●
Cycles	1-Hour Wash/Auto Sense/ Heavy Wash/Light Wash/ Normal Wash	1-Hour Wash/Auto Sense/ Heavy Wash/Light Wash/ Normal Wash	1-Hour Wash/Auto Sense/ Heavy Wash/Light Wash/ Normal Wash	1-Hour Wash/Auto Sense/ Heavy Wash/Light Wash/ Normal Wash
Options				
Bottle Jets	4	4	4	4
Wash Zones	●	●	●	●
Steam PreWash/PreSoak	Steam PreSoak	Steam PreSoak	Steam PreWash	Steam PreWash
Delay Start	1- to 12-hr.	1- to 12-hr.	1- to 12-hr.	1- to 12-hr.
Wash temp—Boost	●	●	●	●
Wash temp—Sanitize**	●	●	●	●
Dry Boost™	Twin Turbo	Twin Turbo	Dry Boost	Dry Boost
Lock controls	●	●	●	●
Racking				
Third Rack	●	Optional	●	●
Rack finish	Silver	Silver	Silver	Silver
Ball-tip tines	●	●	●	●
Upper rack	Easy-touch adjustable full-extension	Easy-touch adjustable full-extension	Easy-touch adjustable full-extension	Easy-touch adjustable full-extension
Fold-down-tine flexibility	2 full-length, upper; 2 multi-position, lower	2 full-length, upper; 2 multi-position, lower	2 multi-position, lower	2 multi-position, lower
Utility shelves		2 Stem Safe		
Angled tines	●	●	●	●
Silverware basket	1-pc. silverware basket with 3 cell covers	1-pc. silverware basket with 3 cell covers	1-pc. silverware basket with 3 cell covers	1-pc. silverware basket with 3 cell covers
Handle color	Stainless steel with chrome Black Stainless with chrome	Stainless steel with chrome Black Stainless with chrome	Stainless steel with chrome Black Stainless with chrome Stainless steel with chrome Black Stainless with chrome	Color-matched
Handle design	Profile handle	Profile handle	Profile handle	Pocket handle
DRY				
Hidden vent with fan	●	●	●	●
Twin Turbo Dry Boost	●	●		
Hidden heater	●	●		
Rinse Aid Sensor	●	●		
QUIET				
Sound insulation package***	39 dBA	42 dBA	45 dBA	45 dBA
INSTALLATION				
Flush cabinet installation	●	●	●	●
Built-up-floor capable	●	●	●	●
Top-/side-mount brackets	●	●	●	●
GPF3RACK compatible		●		
12-ft. drain hose (optional)	GPF12/WD24X10065	GPF12/WD24X10065	GPF12/WD24X10065	GPF12/WD24X10065
Side trim installation strips	●	●	●	●
Front-adjustable rear leveling legs	●	●		
FLOOR PROTECTION				
Leak Defense with Active Flood Protect	●	●	No	No
Active Flood Protect	●	●	●	●
DIMENSIONS HXWXD (IN.)	33-3/8—34-5/8 x 23-3/4 x 24	33-3/8—34-5/8 x 23-3/4 x 24	33-3/8—34-5/8 x 23-3/4 x 24	33-3/8—34-5/8 x 23-3/4 x 24
Approx. shipping weight (lbs.)	137	121	118	118

*Based on DOE test procedure, ANSI/AHAM DW-1.
**Certified to NSF Standard 184.
***dBA levels based on Owens-Corning IEC-60704 lab testing.

GE PROFILE AND GE BUILT-IN DISHWASHER DIMENSIONS

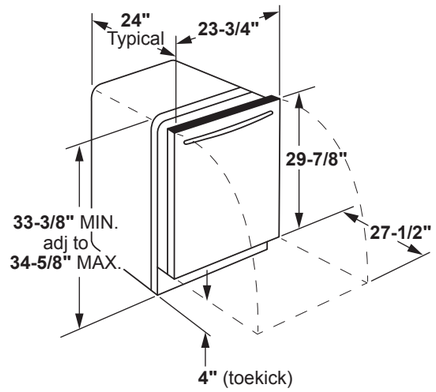

Overall depth including handle: 25.6″

GE Profile (PDT785, PDT775) dishwasher electrical rating

Voltage 120
Hertz 60
Total connected load amperage 10.2
Calrod® heater watts max 1,200/400

For use on adequately wired 120-volt, 15-amp circuit having 2-wire service with a separate ground wire. This appliance must be grounded for safe operation.

GE Profile (PDT715, PDP715) dishwasher electrical rating

Voltage 120
Hertz 60
Total connected load amperage 6.6
Calrod heater watts max 800/500

For use on adequately wired 120-volt, 15-amp circuit having 2-wire service with a separate ground wire. This appliance must be grounded for safe operation.

ENERGY STAR

NSF Residential — National Sanitation Foundation

c UL us LISTED — Listed by Underwriters Laboratories

Above illustrations intended for dimensional reference only. Refer to photography for actual product appearance.

See page 274 for warranty information.
See page 274 for warranty information.

GE TOP CONTROL STAINLESS/PLASTIC INTERIOR DISHWASHERS

	GE											
	GDT665SSNSS GDT665SMNES GDT665SFNDS GDT665SGNWW GDT665SGNBB	GDP665SYNFS	GDT645SSNSS GDT645SYNFS GDT645SMNES GDT645SFNDS GDT645SGNWW GDT645SGNBB	GDP645SYNFS	GDT565SSNSS	GDT635HSMSS		GDT630PYMFS GDT630PSMSS GDT630PMMES GDT630PFMDS GDT630PGMWW GDT630PGMBB	GDT605PFMDS GDT605PSMSS GDT605PMMES GDT605PGMWW GDT605PGMBB	GDT530PSPSS GDT530PMPES GDT530PGPWW GDT530PGPBB	GDT535PSMSS
ENERGY STAR® certified	●	●	●	●	●	●		●	●	●	●
CEE Tier 1 qualified	●	●	●	●	●	●		●	●	●	●
Energy Factor (EF)	0.8	0.8	0.8	0.8	0.8	0.8		0.8	0.8	0.8	0.8
Normal wash gallons per cycle*	3.5	3.5	3.5	3.5	3.5	3.5		3.5	3.5	3.5	3.5
Kilowatt hrs./yr.	270	270	270	270	270	270		270	270	270	270
WiFi	Optional (requires part no. PBX23W00Y0)	Optional (requires part no. PBX23W00Y0)	Optional (requires part no. PBX23W00Y0)	Optional (requires part no. PBX23W00Y0)	Optional (requires part no. PBX23W00Y0)	Built-in		Optional (requires part no. PBX23W00Y0)	Optional (requires part no. PBX23W00Y0)	Optional (requires part no. PBX23W00Y0)	Optional (requires part no. PBX23W00Y0)
FEATURES											
Interior	Stainless steel	Stainless steel	Stainless steel	Stainless steel	Stainless steel	Hybrid stainless steel		Plastic	Plastic	Plastic	Plastic
Door liner	Stainless steel	Stainless steel	Stainless steel	Stainless steel	Stainless steel	Stainless steel		Plastic	Plastic	Plastic	Plastic
Tub liner	Stainless steel	Stainless steel	Stainless steel	Stainless steel	Stainless steel	Plastic		Plastic	Plastic	Plastic	Plastic
Place settings	Up to 16	Up to 16	Up to 16	Up to 16	Up to 14	Up to 16		Up to 16	Up to 16	Up to 16	Up to 14
Front appearance	Top control	Top control	Top control	Top control	Top control	Top control		Top control	Top control	Top control	Top control
Wash system	600 Series	600 Series	600 Series	600 Series	500 Series	600 Series		600 Series	600 Series	500 Series	500 Series
Water filtration	100% with removable filter	100% with removable filter	100% with removable filter	100% with removable filter	100% with removable filter	100% with removable filter		100% with removable filter	100% with removable filter	100% with removable filter	100% with removable filter
Hard-food disposer	Piranha™	Piranha	Piranha	Piranha	Piranha	Piranha		Piranha	Piranha	Piranha	Piranha
Wash levels	Upper/middle/lower	Upper/middle/lower	Upper/middle/lower	Upper/middle/lower	Upper/middle/lower	Upper/middle/lower		Upper/middle/lower	Upper/middle/lower	Upper/middle/lower	Middle/lower
Dedicated silverware jets mid-wash arm	●	●	●	●	●	●		●	●	●	●
Automatic temperature control	●	●	●	●	●	●		●	●	●	●
Hot Start	●	●	●	●	●	●		●	●	●	●
Clean Sensor	●	●	●	●		●		●	●	●	
Rinse Aid dispenser	Rinse Aid with indicator and adjustment	Rinse Aid with indicator and adjustment	Rinse Aid with indicator and adjustment	Rinse Aid with indicator and adjustment	Rinse Aid with indicator and adjustment	Rinse Aid with indicator and adjustment		Rinse Aid with indicator and adjustment	Rinse Aid with indicator and adjustment	Rinse Aid with indicator and adjustment	Rinse Aid with indicator and adjustment
Clean touch controls	●	●	●	●	●						
Sabbath/door wake-up mode	●	●	●	●	●	●		●	●	●	●
End-of-cycle indicators	1 "Clean" light, 1 "Sanitized" light	1 "Clean" light, 1 "Sanitized" light	1 "Clean" light, 1 "Sanitized" light	1 "Clean" light, 1 "Sanitized" light	1 "Clean" light, 1 "Sanitized" light	1 "Clean" light, 1 "Sanitized" light		"1 "Clean" light, 1 "Sanitized" light	1 "Clean" light, 1 "Sanitized" light	1 "Clean" light, 1 "Sanitized" light	1 "Clean" light, 1 "Sanitized" light
Exterior status LED	Bi-color LED status light on door	Bi-color LED status light on door	Bi-color LED status light on door	Bi-color LED status light on door	Bi-color LED status light on door	Bi-color LED status light on door		Bi-color LED status light on door	Bi-color LED status light on door	Bi-color LED status light on door	Bi-color LED status light on door
Touchpads	8	8	8	8	6	8		8	8	6	6
Cycles/Options	5, 11	5, 11	5, 11	5, 11	5, 7	4		4	4	4	4
3-digit countdown display	●	●	●	●		●		●	●	●	
Last cycle memory	●	●	●	●	●	●		●	●	●	●
Audible end-of-cycle signal	●	●	●	●	●	●		●	●	●	●
Cycles	1-Hour Wash/Auto Sense/Heavy Wash/ Light Wash/Normal Wash	1-Hour Wash/Auto Sense/Heavy Wash/ Light Wash/Normal Wash	1-Hour Wash/Auto Sense/Heavy Wash/ Light Wash/Normal Wash	1-Hour Wash/Auto Sense/Heavy Wash/ Light Wash/Normal Wash	1-Hour Wash/Heavy Wash/Light Wash/ Normal Wash/Rinse	1-Hour Wash/Auto Sense/Heavy Wash/ Normal Wash		1-Hour Wash/Auto Sense/Heavy Wash/ Normal Wash	1-Hour Wash/Auto Sense/Heavy Wash/ Normal Wash	1-Hour Wash/Auto Sense/Heavy Wash/ Normal Wash	1-Hour Wash/ Heavy Wash/Normal Wash/Rinse
Options											
Bottle Jets	4	4	4	4		4		4	4		
Wash Zones	●	●	●	●		●		●	●		
Steam + Sani	●	●	●	●	●	●		●	●	●	
Delay Start	1- to 12-hour	1- to 12-hour	1- to 12-hour	1- to 12-hour	2/4/8-hour	1- to 12-hour		1- to 12-hour	1- to 12-hour	1- to 12-hour	2/4/8-hour
Wash temp—Boost	●	●	●	●	●	●		●	●	●	●
Wash temp—Sanitize**	●	●	●	●	●	●		●	●	●	●
Dry Boost™/Heated dry	●/●	●/●	●/●	●/●	●/●	●/●		●/●	●/●	●/●	●/●
Lock controls	●	●	●	●	●	●		●	●	●	●
Racking											
Third Rack	●	●				Optional		●	Optional	Optional	
Rack finish	Silver	Silver	Silver	Silver	Silver	Silver		Silver	Silver	Silver	Silver
Ball-tip tines	●	●	●	●	●	●		●	●	●	●
Upper rack	Easy-touch, adjustable full-extension	Easy-touch, adjustable full-extension	Manual + Adjustable	Manual + Adjustable		Manual + Adjustable		Manual + Adjustable	Manual + Adjustable	Manual + Adjustable	
Fold-down-tine flexibility	2 multi-position, lower	2 multi-position, lower									
Utility shelves			2 Stem Safe	2 Stem Safe		2 Stem Safe			2 Stem Safe	2 Stem Safe	
Lower rack	Multi-position fold-down-tines	Multi-position fold-down-tines	Fixed	Fixed	Fixed	Fixed		Fixed	Fixed	Fixed	Fixed
Angled tines	●	●	●	●	●	●		●	●	●	●
Silverware basket	1-pc. silverware basket with 3 cell covers	1-pc. silverware basket with 3 cell covers	1-pc. silverware basket with 3 cell covers	1-pc. silverware basket with 3 cell covers	1-pc. silverware basket with 3 cell covers	1-pc. silverware basket with 3 cell covers		1-pc. silverware basket with 3 cell covers	1-pc silverware basket with 3 cell covers	1-pc silverware basket with 3 cell covers	1-pc silverware basket with 3 cell covers
Handle color	Stainless steel with chrome Stainless steel with chrome Stainless steel with chrome Color-matched Color-matched	Color-matched	Stainless steel with chrome Stainless steel with chrome Black Stainless with chrome Color-matched Color-matched	Color-matched	Stainless steel with chrome	Stainless steel with chrome		Stainless steel with chrome Stainless steel with chrome Stainless steel with chrome Black Stainless with chrome Color-matched Color-matched	Black Stainless with chrome Stainless steel with chrome Stainless steel with chrome Color-matched Color-matched	Stainless steel with chrome Stainless steel with chrome Color-matched Color-matched	Stainless steel with chrome
Handle design	Designer style	Pocket handle	Designer style	Pocket handle	Designer style	Designer style		Designer style	Designer style	Designer style	Designer style
DRY											
Hidden vent with fan	●	●	●	●							
QUIET											
Sound insulation package***	46 dBA	46 dBA	48 dBA	48 dBA	50 dBA	48 dBA		50 dBA	50 dBA	54 dBA	59 dBA
INSTALLATION											
Flush cabinet installation	●	●	●	●	●	●		●	●	●	●
Built-up-floor capable	●	●	●	●	●	●		●	●	●	●
Top-/side-mount brackets	●	●	●	●	●	●		●	●	●	●
GPF3RACK compatible						●			●	●	
12-ft. drain hose (optional)	GPF12/WD24X10065	GPF12/WD24X10065	GPF12/WD24X10065	GPF12/WD24X10065	GPF12/WD24X10065	GPF12/WD24X10065		GPF12/WD24X10065	GPF12/WD24X10065	GPF12/WD24X10065	GPF12/WD24X10065
Side trim installation strips	Included	Included	Included	Included	Included	Included		Included	Included	Optional: Black WD08X10094	Optional: Black WD08X10094
FLOOR PROTECTION											
Active Flood Protect	●	●	●	●	●	●		●	●	●	●
DIMENSIONS HXWXD (IN.)	← 33-3/8—34-5/8 x 23-3/4 x 24 →							← 33-3/8—34-5/8 x 23-3/4 x 24 →			
Approx. shipping wt. (lbs.)	112	112	112	112	112	89		82	81	77	80

*Based on DOE test procedure, ANSI/AHAM DW-1.
**Certified to NSF Standard 184.
***dBA levels based on Owens-Corning IEC-60704 lab testing.

GE BUILT-IN DISHWASHER DIMENSIONS (IN INCHES)

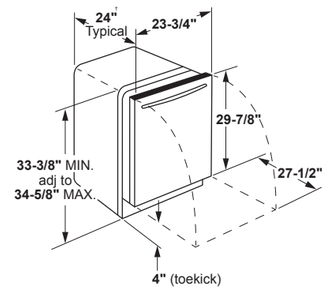

Overall depth including handle: 25.6″

GE (GDT605, GDT635, GDT535) dishwasher electrical rating

Voltage 120
Hertz 60
Total connected load amperage 6.6
Calrod® heater watts max 500/800

For use on adequately wired 120-volt, 15-amp circuit having 2-wire service with a separate ground wire. This appliance must be grounded for safe operation.

GE (GDT665, GDT645, GDT565) dishwasher electrical rating

Voltage 120
Hertz 60
Total connected load amperage 6.6
Calrod heater watts max 500/800

For use on adequately wired 120-volt, 15-amp circuit having 2-wire service with a separate ground wire. This appliance must be grounded for safe operation.

Above illustrations intended for dimensional reference only.
Refer to photography for actual product appearance.

GE STAINLESS/PLASTIC INTERIOR DISHWASHERS

	ADA COMPLIANT		GE							
	GDT225SSLSS GDT225SGLWW GDT225SGLBB	**GDT226SILII** (Avail. July 2021) **GDT226SSLSS GDT226SGLWW GDT226SGLBB**	**GDF450PSRSS GDF450PGRWW GDF450PGRBB**	**GDF510PSRSS GDF510PGRWW GDF510PGRBB GDF511PSRSS*** GDF511PGRWW*** GDF511PGRBB***	**GDF535PSRSS GDF535PGRWW GDF535PGRBB GDF535PGRCC**	**GDF530PSMSS GDF530PMMES GDF530PGMWW GDF530PGMBB**		**GDF630PSMSS GDF630PMMES GDF630PGMWW GDF630PGMBB**	**GDF565SSNSS**	**GDF645SMNES GDF645SGNWW GDF645SGNBB GDF645SSNSS**
ENERGY STAR® certified	●	●	●	●	●	●		●	●	●
CEE Tier 1 qualified	●	●	●	●	●	●		●	●	●
Energy Factor (EF)	0.80	0.80	0.80	0.80	0.80	0.80		0.80	0.80	0.80
Normal wash gallons per cycle*	3.5	3.5	3.5	3.5	3.5	3.5		3.5	3.5	3.5
Kilowatt hrs./yr.	270	270	270	270	270	270		270	270	270
ADA	●	●								
WiFi	Optional (requires part no. PBX23W00Y0)	Optional (requires part no. PBX23W00Y0)	Optional (requires part no. PBX23W00Y0)	Optional (requires part no. PBX23W00Y0)	Optional (requires part no. PBX23W00Y0)	Optional (requires part no. PBX23W00Y0)		Optional (requires part no. PBX23W00Y0)	Optional (requires part no. PBX23W00Y0)	Optional (requires part no. PBX23W00Y0)
FEATURES										
Interior	Stainless Steel	Stainless steel	Plastic	Plastic	Plastic	Plastic		Plastic	Stainless steel	Stainless steel
Door liner	Stainless Steel	Stainless steel	Plastic	Plastic	Plastic	Plastic		Plastic	Stainless steel	Stainless steel
Tub liner	Stainless Steel	Stainless steel	Plastic	Plastic	Plastic	Plastic		Plastic	Stainless steel	Stainless steel
Place settings	Up to 12	Up to 12	Up to 12	Up to 12	Up to 14	Up to 16		Up to 16	Up to 14	Up to 16
Front appearance	Top control	Top control	Front control	Front control	Front control	Front control		Front control	Front control	Front Control
Wash system	3-level standard	3-level standard	400 Series	500 Series	500 Series	600 Series		600 Series	500 Series	600 Series
Water filtration	100% with removable filter	100% with removable filter	100% with removable filter	100% with removable filter	100% with removable filter	100% with removable filter		100% with removable filter	100% with removable filter	100% with removable filter
Hard-food disposer	Piranha™	Piranha	Piranha	Piranha	Piranha	Piranha		Piranha	Piranha	Piranha
Wash levels	Upper/middle/lower	Upper/lower/middle	Middle/lower	Middle/lower	Middle/lower	Upper/middle/lower		Upper/middle/lower	Upper/middle/lower	Upper/middle/lower
Dedicated silverware jets mid-wash arm			●	●	●	●		●	●	●
Dual pumps and motors	●	●	●	●	●	●		●	●	●
Automatic temp. control	●	●	●	●	●	●		●	●	●
Hot Start	Automatic	Automatic	Automatic	Automatic	Automatic	Automatic		Automatic	Automatic	Automatic
Clean Sensor	●	●				●		●	●	●
Rinse Aid dispenser	Rinse Aid with indicator and adjustment	Rinse Aid with indicator and adjustment	Rinse Aid with indicator and adjustment	Rinse Aid with indicator and adjustment	Rinse Aid with indicator and adjustment	Rinse Aid with indicator and adjustment		Rinse Aid with indicator and adjustment	Rinse Aid with indicator and adjustment	Rinse Aid with indicator and adjustment
Clean touch controls									●	●
Sabbath/door wake-up mode	●	●	●	●	●	●		●	●	●
End-of-cycle indicators	1 "Clean" light, 1 "Sanitized" light	"1 "Clean" light, 1 "Sanitized" light	1 "Clean" light	1 "Clean" light	"1 "Clean" light, 1 "Sanitized" light	"1 "Clean" light, 1 "Sanitized" light		"1 "Clean" light, 1 "Sanitized" light	1 "Clean" light, 1 "Sanitized" light	"1 "Clean" light, 1 "Sanitized" light
Touchpads	4	4	2	4	4	6		8	6	8
Cycles/Options	3	3	3	4	4	4		4	5/7	5/11
3-digit countdown display	●	●				●		●		●
Last cycle memory	●	●	●	●	●	●		●	●	●
Audible end-of-cycle signal	●	●				●		●	●	●
Cycles	Auto Sense/ Heavy Wash/ Light Wash	Auto Sense/ Heavy Wash/ Light Wash	1-Hour Wash/ Heavy Wash/ Normal Wash	1-Hour Wash/ Heavy Wash/ Normal Wash/Rinse	1-Hour Wash/ Heavy Wash/ Normal Wash/Rinse	1-Hour Wash/Auto Sense/Heavy Wash/ Normal Wash		1-Hour Wash/Auto Sense/Heavy Wash/ Normal Wash	1-Hour Wash/Heavy Wash/Normal Wash/ Light Wash/Rinse	1-Hour Wash/Auto Sense/ Heavy Wash/Light Wash/ Normal Wash
Options										
Bottle Jets								4		4
Wash Zones								●		●
Steam + Sani					●	●		●	●	●
Delay Start	1- to 12-hour	1- to 12-hour				1- to 12-hour		1- to 12-hour	2/4/8-hour	1- to 12-hour
Wash temp—Boost	●	●		●	●	●		●	●	●
Wash temp—Sanitize**	●	●			●	●		●	●	●
Dry Boost™/Heated Dry			●/●	●/●	●/●	●/●		●/●	●/●	●/●
Lock controls	●	●	●	●	●	●		●	●	●
Racking										
Third Rack						Optional		●		
Rack finish	Gray	Gray	Silver	Silver	Silver	Silver		Silver	Silver	Silver
Ball-tip tines	●	●	●	●	●	●		●	●	●
Upper rack	Manual + Adjustable	Manual + Adjustable	Standard	Standard	Standard	Manual + Adjustable		Manual + Adjustable		Manual + Adjustable
Utility shelves	1 cup shelf	1 cup shelf			Stem Safe	2 Stem Safe				2 Stem Safe
Lower rack	Fixed	Fixed	Fixed	Fixed	Fixed	Fixed		Fixed	Fixed	Fixed
Angled tines	●	●	●	●	●	●		●	●	●
Silverware basket	1-pc. silverware basket with 2 cell covers	1-pc. silverware basket with 2 cell covers	1-pc. silverware basket	1-pc. silverware basket	1-pc. silverware basket	1-pc. silverware basket with 3 cell covers		1-pc. silverware basket with 3 cell covers	1-pc. silverware basket with 3 cell covers	1-pc. silverware basket with 3 cell covers
Handle color	Color-matched	Stainless steel with chrome Color-matched	Color-matched	Color-matched	Color-matched	Color-matched		Color-matched	Color-matched	Color-matched
Handle design	Pocket	Designer style	Integrated	Integrated	Integrated	Recessed		Recessed	Recessed	Recessed
DRY										
Calrod® heating element	●	●	800/500	800/500	800/500	800/500		800/500	800/500	800/500
QUIET										
Sound insulation package†	51 dBA	51 dBA	60 dBA	59 dBA	55 dBA	54 dBA		50 dBA	50 dBA	48 dBA
Tub insulation—blanket	●	●			●	●		●	●	●
INSTALLATION										
Installation	Flush cabinet installation	Flush cabinet installation	Flush cabinet installation	Flush cabinet installation	Flush cabinet installation	Flush cabinet installation		Flush cabinet installation	Flush cabinet installation	Flush cabinet installation
Built-up-floor capable	●	●	●	●	●	●		●	●	●
Top-/side-mount brackets	●	●	●	●	●	●		●	●	●
GPF3RACK compatible						●				
12-ft. drain hose (optional)	GPF12/WD24X10065	GPF12/WD24X10065	GPF12/WD24X10065	GPF12/WD24X10065	GPF12/WD24X10065	GPF12/WD24X10065		GPF12/WD24X10065	GPF12/WD24X10065	GPF12/WD24X10065
Side trim installation strips	Factory installed	Factory installed	Optional: White WD08X10096 Optional: Black WD08X10094	Optional: White WD08X10096 Optional: Black WD08X10094	Optional: White WD08X10096 Optional: Black WD08X10094	Optional: White WD08X10096 Optional: Black WD08X10094		Included	Included	Included
FLOOR PROTECTION										
Active Flood Protect			●	●	●	●		●	●	●
DIMENSIONS HxWxD (in.)	32-1/4—34-5/8 x 23-3/4 x 23-1/2		33-3/8—34-5/8 x 23-3/4 x 24					33-3/8—34-5/8 x 23-3/4 x 24		
Approx. shipping weight (lbs.)	96	96	65	65	65	82		77	112	112

*Based on DOE test procedure, ANSI/AHAM DW-1.
**Certified to NSF Standard 184.
***GDF511 models have power cords attached.
†dBA levels based on Owens-Corning IEC-60704 lab testing.

GE STAINLESS/PLASTIC INTERIOR DISHWASHERS

GE (GDF630, GDF530, GDF450, GDF535 GDF510) dishwasher electrical rating

Voltage 120
Hertz 60
Total connected load amperage 6.6
Calrod heater watts max 500/800

For use on adequately wired 120-volt, 15-amp circuit having 2-wire service with a separate ground wire. This appliance must be grounded for safe operation.

GE (GDF565, GDF645) dishwasher electrical rating

Voltage 120
Hertz 60
Total connected load amperage 7.2
Calrod heater watts max 500/800

For use on adequately wired 120-volt, 15-amp circuit having 2-wire service with a separate ground wire. This appliance must be grounded for safe operation.

ADA-compliant models (GDT225SGL/ GDT226SSL) electrical rating

Voltage AC 120
Hertz 60
Total connected load amperage 6.7

For use on adequately wired 120-volt, 15-amp circuit having 2-wire service with a separate ground wire. This appliance must be grounded for safe operation.

UFAS/ADA-COMPLIANT

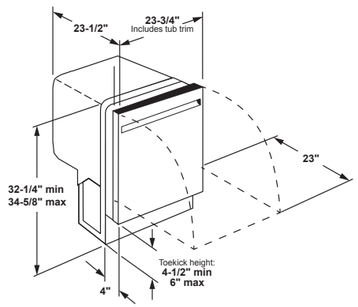

Overall depth including handle: 25.6".

ENERGY STAR

ADA COMPLIANT

NSF Residential
National Sanitation Foundation

c UL us LISTED
Listed by Underwriters Laboratories

Above illustrations intended for dimensional reference only.
Refer to photography for actual product appearance.

See page 274 for warranty information.

GE DISHWASHERS

	GE
	GSD2100VWW GSD2100VCC GSD2100VBB
Energy Factor (EF)	0.70
Normal wash gallons per cycle*	5.0
Kilowatt hrs./yr.	307
FEATURES	
Tub and door liner	Permatuf™ plastic
Wash system	
Wash levels	2
Water filtration	2-stage
Self-cleaning filtration	●
Hard-food disposer	Piranha™
Rinse Aid dispenser	●
Cycle progress indicator(s)	Dial
Cycles/Options	5/2
Cycles	
Heavy Wash	Dial
Normal Wash	Dial
Light Wash	Dial
Plate Warmer	Dial
Rinse Only	Dial
Options	
Heated Dry	Rocker
Hot Start	Dial
Racking	
Upper rack	Standard
Lower rack	Standard
Silverware basket	Deluxe
Side-mount installation kit	GPF65
Latch	●
Handle color	Color-matched
DRY	
Calrod® heating element	●
QUIET	
Sound package**	64 dBA
APPEARANCE	
Color panels—door & access	Trimless
WEIGHTS & DIMENSIONS	
Height with legs retracted (in.)	34
Height with legs removed (in.)	33-13/16
Height with legs extended (in.)	35
Overall width (in.)	24
Overall depth (in.)	25-3/4
Approx. shipping weight (lbs.)	70

*Based on DOE test procedure, ANSI/AHAM DW-1.
**dBA levels based on Owens-Corning IEC-60704 lab testing.

GE BUILT-IN DISHWASHER DIMENSIONS (IN INCHES)

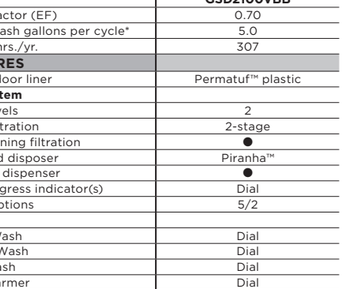

Electrical rating 3000 and 2100 Series

Voltage AC 120
Hertz 60
Total connected load amperage 6.2
Calrod heater watts 500

For use on adequately wired 120V, 15-amp circuit having 2-wire service with a separate ground wire. This appliance must be grounded for safe operation.

GE SPACEMAKER® UNDER-THE-SINK DISHWASHER

	GE
	GSM2260VSS GSM2200VWW GSM2200VBB
Energy Factor (EF)	0.70
Normal wash gallons per cycle*	5.0
Kilowatt hrs./yr.	307
FEATURES	
Tub and door liner	Permatuf plastic
Wash levels	2
Food disposer	●
Cycles	5
Pots & Pans	●
Normal Wash	●
Plate Warmer	Dial
Rinse Only	Dial
Light Wash	Dial
Options	2
Heated Dry	●
Hot Start	Dial
Racking	
Upper rack	Spacemaker
Lower rack	Standard
Silverware basket	Deluxe
Control type	Turn-to-start
Cycle progress indicator	Dial
Pushbuttons	4
Solid surface installation kit	GPF65
Rinse Aid dispenser	●
Door latch	●
Handle color	Color-matched
DRY	
Calrod heating element	●
QUIET	
Sound package**	64 dBA
APPEARANCE	
Color panels—door & access	Trimless
WEIGHTS & DIMENSIONS	
Height w/legs retracted (in.)	34
Overall width (in.)	24
Overall depth (in.)	25-3/4
Approx. shipping weight (lbs.)	60

*Based on DOE test procedure, ANSI/AHAM DW-1.
**dBA levels based on Owens-Corning IEC-60704 lab testing, 2009-2010.

CABINET CUTOUT FOR SINK (IN INCHES)

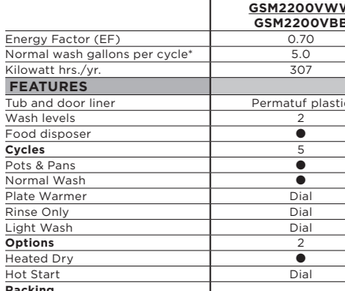

Cabinet cutouts for offset single- and double-bowl sinks. Dishwasher not provided with complete enclosure. Enclosures for sides, top, bottom, and back must be provided by installer at time of installation.

CABINET ROUGH-IN (IN INCHES)

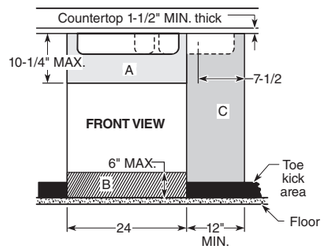

Above illustrations intended for dimensional reference only. Refer to photography for actual product appearance.

GE PROFILE™ 18" DISHWASHER

	GE PROFILE
	PDT145SGLBB PDT145SGLWW PDT145SSLSS
ENERGY STAR® certified	●
CEE Tier 1 qualified	●
Energy Factor (EF)	0.80
Normal wash gallons per cycle*	3.5
Kilowatt hrs./yr.	270
ADA	●
FEATURES	
Interior/Door liner/Tub liner	Stainless steel
Place settings	8
Front appearance	Flat door
Wash system	3-level standard
Water filtration	100% with removable filter
Hard-food disposer	Piranha
Wash levels	Upper/middle/lower
Dual pumps and motors	●
Automatic temp. control	●
Hot Start	Automatic
Sensor	Clean Sensor
Rinse Aid dispenser	Rinse Aid with indicator and adjustment
Electronic controls	●
Sabbath/Door wake-up mode	●
End-of-cycle indicators	1 "Clean" light, 1 "Sanitized" light
Cycles/Options	3
3-digit countdown display	●
Last cycle memory	●
Audible end-of-cycle signal	●
Cycles	Auto Sense/Heavy/Light
Options	
Delay Start	1-12-hr
Wash temp—Boost	●
Wash temp—Sanitize (NSF**)	●
WiFi Connect capable	Optional (requires part no. PBX23W00Y0)
Lock controls	●
Racking	
Rack finish	Gray
Ball-tip tines	●
Upper rack	Adjustable
Utility shelves	Stem Safe
Lower rack	Fold-down tines
Angled tines	●
Silverware basket	1-pc. with 1 cell cover
Handle color	Color-matched
Handle design	Pocket
DRY	
Hidden heater	●
QUIET	
Sound insulation package***	47 dBA
Tub insulation—blanket	●
INSTALLATION	
Built-up-floor capable	●
Top-/side-mount brackets	Included
12-ft. drain hose	GPF12/WD24X10065
Side trim installation strips	Factory installed
WEIGHTS & DIMENSIONS	
Height/Width/Depth (in.)	32-1/2–34-5/8 x 17-3/4 x 23-1/2
Approx. shipping wt. (lbs.)	83

*Based on DOE test procedure, ANSI/AHAM DW-1.
**Certified by National Sanitation Foundation.
***dBA levels based on Owens-Corning IEC-60704 lab testing, 2009–2010.

18" SPACEMAKER BUILT-IN DIMENSIONS (IN INCHES)

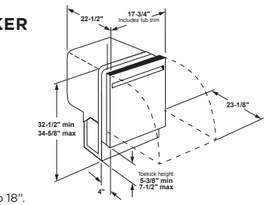

*Width from 17-5/8" to 18".
**Meets ADA countertop height requirement of 34".

18" dishwashers electrical rating

Voltage AC 120
Hertz 60
Total connected load amperage 8.9

For use on adequately wired 120V, 15-amp circuit having 2-wire service with a separate ground wire. This appliance must be grounded for safe operation.

Above illustrations intended for dimensional reference only. Refer to photography for actual product appearance.

GE PORTABLE DISHWASHERS

	GE	
	GPT225SSLSS GPT225SGLWW GPT225SGLBB	GPT145SSLSS
Energy Factor (EF)	0.8	0.8
Normal wash gallons per cycle*	3.5	3.5
Kilowatt hrs/yr.	270	270
FEATURES		
Tub and door liner	Stainless steel	Stainless steel
Wash system	3-level standard	3-level standard
Wash levels	Upper/middle/lower	Upper/middle/lower
Water filtration	3-stage manual clean filtration	3-stage manual clean filtration
Hard-food disposer	Piranha	Piranha
Rinse Aid dispenser	Rinse Aid with indicator and adjustment	Rinse Aid with indicator and adjustment
Cycles	Auto/Heavy/Light	Auto/Heavy/Light
Options		
Heated Dry	Condensate dry	Condensate dry
Hot Start	Automatic	Automatic
Racking (upper/lower)		
Silverware basket	1-pc. w/cell covers	1-pc. w/cell covers
Cycle progress indicator(s)	●	●
Touchpads	●	●
Latch	Center pull	Center pull
Handle color	Color-matched	Color-matched
QUIET		
Sound insulation package**	54 dBA	52 dBA
APPEARANCE		
Side panel colors	Black, White, Black	Black
Color panels—door & access	SS, White, Black	SS
Decorative wood laminate top	Black, Grey, Black	Black
WEIGHTS & DIMENSIONS		
Overall height w/legs extended (in.)	36	36
Overall width cabinet (in.)	24	18
Overall depth (in.)	25-3/8	25-3/8
Overall width countertop (in.)	23-5/8	18
Approx. shipping weight (lbs.)	177	177

*Based on DOE test procedure, ANSI/AHAM DW-1.
**dBA levels based on Owens-Corning IEC-60704 lab testing, 2009–2010.

PORTABLE DISHWASHER DIMENSIONS (IN INCHES)

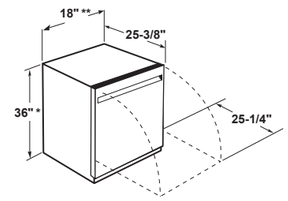

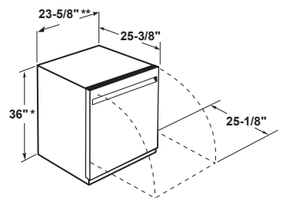

*Includes top and wheels
**Includes countertop

GPT145 Electrical rating

Voltage AC 120
Hertz 60
Total connected load amperage 8.9

For use on adequately wired 120-volt, 15-amp circuit having 2-wire service with a separate ground wire. This appliance must be grounded for safe operation..

GPT225 Electrical rating

Voltage AC 120
Hertz 60
Total connected load amperage 8.9

For use on adequately wired 120-volt, 15-amp circuit having 2-wire service with a separate ground wire. This appliance must be grounded for safe operation.

See page 274 for warranty information.

See page 274 for warranty information.

CABINET ROUGH-IN (IN INCHES) CONT.

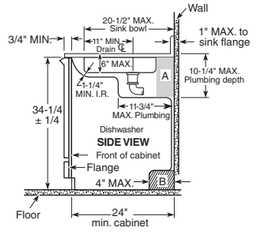

Either single- or double-bowl sink may be used, centered or offset, as shown in the front illustration above. The 20-1/2" max. dimension from wall to front of sink bowl must be accurate if dishwasher is to fit properly under sink. Water lines to sink faucet and drain from sink can be run through area "A". HOT WATER line to dishwasher is installed in area "B". Garbage disposer, water lines to faucet, trap, waste air gap and water cut-off valve are installed in 12" wide cabinet shown in area "C". Sink opening for garbage disposer must be dimensioned as shown in front view, area "C" above (7-1/2"). This will provide clearance for disposer and plumbing in cabinet "C" when using double-bowl sink. If the sink bowl is more than 20-1/2" max. specified distance from the wall, or if the base cabinet is less than the 24" min. depth from the wall, a gap between the tub front flange and the front of the base cabinet may result.

PLUMBING/ELECTRICAL ROUGH-IN (IN INCHES)

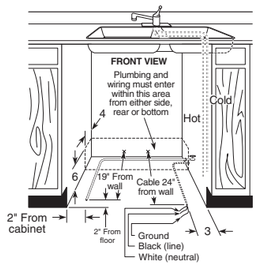

Plumbing: Hot Water Only: Use 3/8" O.D. copper tubing min. inlet line. Water valve has 3/8" internal threads. Hand cut-off valve is recommended.
Electrical: Fuse circuit with 15 amp or 20 amp standard fuse or circuit breaker. Total amp load is 6.2. Dishwasher operates on 120V, 60 Hz power. Two-wire cable (14 ga. min.) with ground must be installed.
Note: All rough-in, both plumbing and electrical, must be completed before the dishwasher is installed. All plumbing and electrical work must be in accordance with local codes.
Specifications: Inlet Water Temperature Recommended: Minimum 120°F at dishwasher. Inlet Water Pressure Required: 15 to 120 lbs./sq. in.

ROUGH-IN FOR INSTALLATION WITH DISPOSER (IN INCHES)

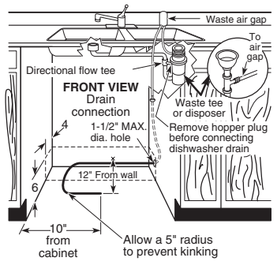

A close-fitting elbow or special shallow sink strainer is necessary to provide clearance between sink drain and dishwasher. Dishwasher furnished with 1/2" I.D. drain hose, 78" long. If using copper tubing, 2" length of 1/2" I.D. rubber hose must be provided to connect copper tubing to pump outlet. Disposer should have 7/8" I.D. dishwasher drain connector.

REAR VIEW PLUMBING ARRANGEMENT (IN INCHES)

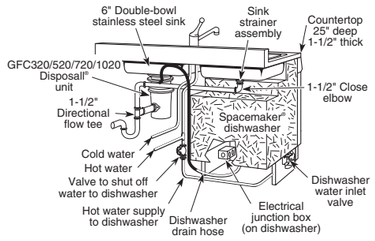

DISHWASHER AND COMPACTOR ACCESSORIES

	GE Profile™ Stainless Interior	GE Stainless Steel Interior	GE Tall Tub Hybrid and Plastic Interior	GE Plastic Standard Tub	18" Dishwashers	Spacemaker® Dishwashers	24" ADA
GPFCORD—5.2' power cord	●	●	●	●	●	●	●
WX09X70911—7.9' power cord	●	●	●	●	●	●	●
GPF10S & WX09X70910—10' drain hose for standard tub				●			
GPF12 (WD24X10065)—12' drain hose for plastic tall tub	●	●	●				
Solid surface installation kit	Included	Included	Included	GPF65 (WX13X10001) Sold separately	Included with GDT225SGL, GDT225SSL, PDT145SGL & PDT145SSL	GPF65 (WX13X10001) Sold separately	Included
GPF3RACK	Select		Select				
OLD: PBX10W00Y0 Connect Plus			Sold separately	Sold separately	Sold separately		Sold separately
NEW: PBX23W00Y0 U+ Connect	Sold separately	Sold separately	Sold separately	Sold separately	Sold separately		Sold separately

DISHWASHER ROUGH-IN INFORMATION FOR MODEL PDT145SGL/SSL

Note: Dishwasher must not be installed more than ten feet from sink for proper drainage. All plumbing and electrical work must be in accordance with local codes. Most of the installation work should be done before the dishwasher is moved into place. First, select a location as close to the sink as possible for ready access to water and drain lines. For proper operation and appearance of the dishwasher, the cabinet opening should be square and have dimensions as shown in Figure 1. If the dishwasher is to be installed in a corner, there must be sufficient clearance to open the door as shown in Figure 2. A minimum clearance of 2" is recommended.

Rough-in the water, electrical, and drain lines before proceeding with installation. The lines should run straight to their connections on the dishwasher.

Note: Make sure that the lines do not cross in front of the dishwasher motor or its legs.

FIGURE 1

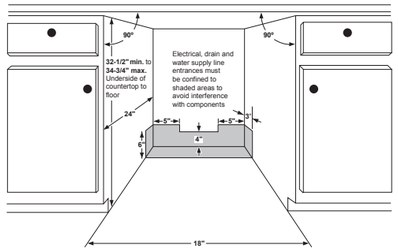

FIGURE 2

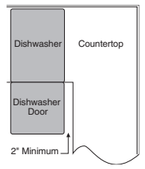

DISHWASHER ROUGH-IN INFORMATION

Note: Dishwasher must not be installed more than ten feet from sink for proper drainage. All plumbing and electrical work must be in accordance with local codes.

The power cord and connections must comply with the National Electrical Code Section 422 and/or local codes and ordinances. The cord must be no longer than six feet from the junction box to the receptacle.

GDT225SGL/SSL, GDT226SGL/SSL/SIL INSTALLATION INFORMATION (IN INCHES)

The rough cabinet opening must be at least 24" deep, 24" wide and approximately 32-1/2" to 34-3/4" high from floor to underside of the countertop.

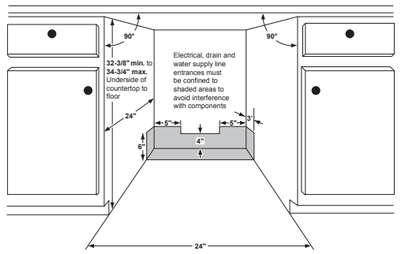

Above illustrations intended for dimensional reference only.
Refer to photography for actual product appearance.

See page 274 for warranty information.

DISHWASHER INSTALLATION INFORMATION

GE PROFILE™, GE STAINLESS STEEL, GE HYBRID STAINLESS STEEL AND PLASTIC TUB DISHWASHERS INSTALLATION INFORMATION (IN INCHES)

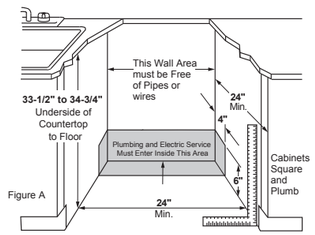

Figure A

Listed by Underwriters Laboratories

BUILT-IN COMPACTORS

	UCG1520NSS UCG1500NWW UCG1500NBB UCG1510NII
FEATURES	
Cycle time	30 seconds maximum
Motor horsepower	1/3
Compression ratio (average)	75% reduction of volume
Ram force (lb.) (max.)	2,300
Front level legs and rear wheels	●
Capacity	1.4 cu. ft.
Side-release bin	●
Toe/foot pedal drawer opener	●
Lock/start control w/removable key	●
Automatic anti-jam	●
Slide-out drawer	●
APPEARANCE	
Hidden controls	●
Colors available**	SS, WW, BB, II
Toe kick	Stainless White Black Black
WEIGHTS & DIMENSIONS	
Total shipping weight (lbs.)	152
Total appliance weight (lbs.)	141
Overall height (in.)	33-3/4 to 35
Overall width (in.)	14-7/8
Overall depth (in.)	24
Cutout dimensions H x W x D (in.)	34-35 x 15 min x 24
Clearance for drop-down drawer side	6" or more on right side
Drawer extension for removal	23" or more in front of appliance
ACCESSORIES	
Compactor bags (5 included)	WC60X5017
Stainless toe kick (3 pieces required)	WC17X10019, WC17X10011, WC17X10006
WARRANTY	
One-year limited warranty*	●

*See written warranty for details.
**SS = Stainless, WW = White, BB = Black, II = Custom panel-ready

COMPACTOR DIMENSIONS (IN INCHES)

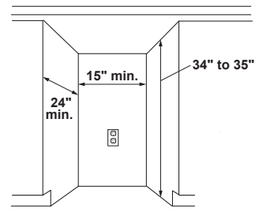

Locate the outlet **18" min.** from the floor, **3" min.** from either side.

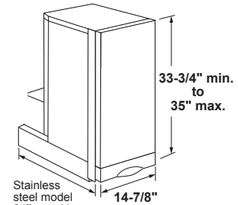

Clearances: Allow **6"** clearance to a vertical wall on the right side for bag removal. Allow **23"** at the front for a full drawer opening.

GE DISPOSALL® FOOD WASTE DISPOSERS

	GE CONTINUOUS FEED									BATCH FEED
	GFC1020N	GFC720N	GFC530N	GFC535N	GREEN05P	GFC520N	GFC525N	GFC320N	GFC325N	GFB760N
FEATURES										
Motor horsepower	1	3/4	1/2	1/2	1/2	1/2	1/2	1/3	1/3	3/4
Control method	Wall switch	Wall switch	Wall switch	Wall switch	Wall switch	Wall switch	Wall switch	Wall switch	Wall switch	Magnetic Sink stopper
Feed type	Continuous	Continuous	Continuous	Continuous	Continuous	Continuous	Continuous	Continuous	Continuous	Batch
Power connection	Direct wire	Direct wire	Direct wire	Power cord	Power cord	Direct wire	Power cord	Direct wire	Power cord	Direct wire
Impellers										
Dual-swivel	●	●	●	●	●	●	●	●	●	●
Jam-resistant	●	●	●	●	●	●	●	●	●	●
Stainless steel	●	●	●	●	●	●	●			●
Armature shaft material	Cold-rolled carbon steel	Cold-rolled carbon steel	Cold-rolled carbon steel	Cold-rolled carbon steel	Cold-rolled carbon steel	Cold-rolled carbon steel	Cold-rolled carbon steel	Cold-rolled carbon steel	Cold-rolled carbon steel	Cold-rolled carbon steel
Grinding speed (RPMs)*	Over 2,800	Over 2,700	Over 2,600	Over 2,600	Over 2,600	Over 2,600	Over 2,600	Over 2,300	Over 2,300	Over 2,700
Capacity	Super	Super	Extra-large	Extra-large	Extra-large	Large	Large	Large	Large	Super
Mounting type	Easy Mount	Easy Mount	Easy Mount	Easy Mount	Universal 3-bolt mount	Easy Mount	Easy Mount	Easy Mount	Easy Mount	Easy Mount
3-bolt-mount adapter kit included	●	●	●			●		●		●
Turntable material	Stainless	Stainless	Stainless	Stainless	Stainless	Galv. steel	Galv. steel	Galv. steel	Galv. steel	Stainless
Two-level precutter	●	●	●	●	●	●	●	●	●	●
Stainless steel sink flange	●	●	●	●	●	●	●	●	●	●
Manual reset overload protector	●	●	●	●	●	●	●	●	●	●
Splash guard	●	●	●	●	●	●	●	●	●	
Sink stopper	●	●	●	●	Stainless	●	●	●	●	●
Drain Boost	●	●	●	●	●	●	●	●	●	●
Dishwasher drain connector	●	●	●	●	●	●	●	●	●	●
Drain elbow	●	●	●	●	●	●	●	●	●	●
QUIET										
Sound reduction technology	●	●	●	●						●
WEIGHTS & DIMENSIONS										
Approx. shipping weight (lbs.)	14.9	12.45	9.6	9.9	10.1	8.8	9.1	8.4	8.7	13.75
Net weight (lbs.)	13.2	10.7	8.05	8.35	9.1	7.8	8.1	7.4	7.7	11
Dishwasher inlet diameter (in.)	1	1	1	1	3/4	1	1	1	1	1
Drain outlet diameter (in.)	1-1/2	1-1/2	1-1/2	1-1/2	1-1/2	1-1/2	1-1/2	1-1/2	1-1/2	1-1/2
POWER RATINGS										
Volts, Hertz, Amps	120; 60; 7.0	120; 60; 6.0	120; 60; 4.5	120; 60; 4.5	120; 60; 4.5	120; 60; 4.5	120; 60; 4.5	120; 60; 4.0	120; 60; 4.0	120; 60; 6.0
ACCESSORIES										
Power cord	PM3X215	PM3X215	PM3X215	Equipped	Equipped	PM3X215	Equipped	PM3X215	Equipped	PM3X215
WARRANTY										
One-year limited replacement warranty**	●	●	●	●	●	●	●	●	●	●
Additional limited parts warranty**	7-year	5-year	3-year	3-year	3-year	2-year	2-year			5-year

*Based on RPM testing of cleared GE and competitive models.
**See written warranty for details.

Above illustrations intended for dimensional reference only.
Refer to photography for actual product appearance.

See page 274 for warranty information.

FRONT LOAD WASHERS

	GE			
	GFW850SPN GFW850SSN	GFW650SPN GFW650SSN	GFW550SPN GFW550SSN	CONTRACT EXCLUSIVE GFW510SCN
CAPACITY				
Cubic feet	5.0 DOE*	4.8 DOE*	4.8 DOE*	4.5 DOE*
FEATURES				
ENERGY STAR® certified	●	●	●	●
UFAS/ADA**	● / ●	● / ●	● / ●	● / ●
UltraFresh Vent System	●	●	●	●
Wash/rinse temperatures	5	5	5	5
Water levels	Automatic	Automatic	Automatic	Automatic
Reversible door	●	●	●	●
Vibration control	dBT™	dBT	dBT	dBT
Internal water heater	●	●		
Custom cycle (My Cycle)	Using SmartHQ App™	Using SmartHQ App	●	●
Steam Assist	●	●		
Cold Wash Technology	●	●	●	●
Number of cycles	12	12	10	10
Sanitize with Allergen	●	●		
Sanitize			using Oxi	using Oxi
Bulky/Bedding	●	●	●	●
Active Wear	●	●		
Time Saver	●	●	●	
1 Step Wash + Dry	●			
More Water	Using SmartHQ App	Using SmartHQ App	●	●
Tumble Care		●	●	●
Delay Wash	●	●	●	●
SmartDispense™	●	●		
Detergent dispenser (liquid/powder)	Flow-thru timed	Flow-thru timed	Flow-thru timed	Flow-thru timed
Bleach dispenser	Flow-thru timed	Flow-thru timed	Flow-thru timed	Flow-thru timed
Fabric softener dispenser	Flow-thru timed	Flow-thru timed	Flow-thru timed	Flow-thru timed
Pretreat dispenser	SmartDispense™	SmartDispense	●	
Control type	Electronic LED	Electronic LED	Electronic LED	Electronic LED
End-of-cycle signal	Adjustable	Adjustable	Adjustable	Adjustable
Wash/spin speed combinations	5	5	5	5
Max. RPM spin speed	1,300	1,300	1,300	1,300
Water temperature system	Auto Temp Control	Auto Temp Control	Auto Temp Control	Auto Temp Control
Colors/Normal	●	●	●	●
Delicates/Hand Wash	●	●	●	●
Whites	●	●	●	●
Optional soil levels	5	5	5	5
Self Clean/Tub Clean	●	●	●	●
Extra Rinse	●	●	●	●
Add a Garment	●	●	●	●
Quick Wash	●	●	●	●
Adaptive capabilities	Load size	Load size	Load size	Load size
Washer interior light	LED	LED		
Cycle countdown	●	●	●	●
Cycle status lights	●	●	●	●
Prewash/Presoak	Prewash	Prewash	Prewash	Presoak
Stainless steel wash basket	●	●	●	●
Handle	Outside pocket	Outside pocket	Outside pocket	Outside pocket
Inlet hoses				Included
Optional pedestal	GFP1528	GFP1528	GFP1528	GFP1528
Optional riser	GFR0728	GFR0728	GFR0728	GFR0728
Optional stacking kit	GFA28KITN	GFA28KITN	GFA28KITN	GFA28KITN
WiFi Connect	●	●	●	●
APPEARANCE				
Colors available***	WW DG, RS	WW SN	WW DG	WW
WEIGHTS & DIMENSIONS				
Approx. shipping weight (lbs.)	263	256	256	256
Flexible installation	Undercounter, stacked, side-by-side	Undercounter, stacked, side-by-side	Undercounter, stacked, side-by-side	Undercounter, stacked, side-by-side
POWER/RATINGS				
Integrated Modified Energy Factor (IMEF)	2.76	2.76	2.76	2.76
Integrated Water Factor (IWF)	3.00	3.00	3.00	3.00
Circuit breaker or Time-delay fuse	15 or 20 amps	15 or 20 amps	15 or 20 amps	15 or 20 amps
Volts/Hertz	120V; 60Hz	120V; 60Hz	120V; 60Hz	120V; 60Hz

*Department of Energy.
**ADA-qualified based on Americans with Disabilities Act. UFAS compliant with the Uniform Federal Accessibility Standards.
***WW = White, DG = Diamond Gray, RS = Sapphire Blue, SN = Satin Nickel.

See page 275 for warranty information.

WASHER DIMENSIONS: GFW850

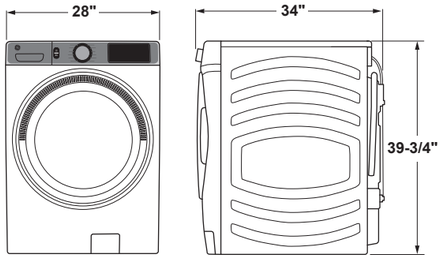

FRONT VIEW SIDE VIEW

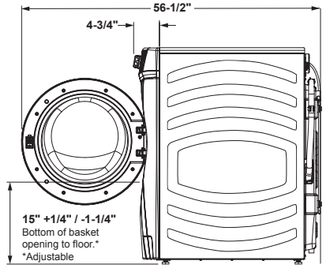

SIDE VIEW WITH DOOR OPEN

*With leveling leg adjust.

WASHER DIMENSIONS: GFW650, GFW550, GFW510

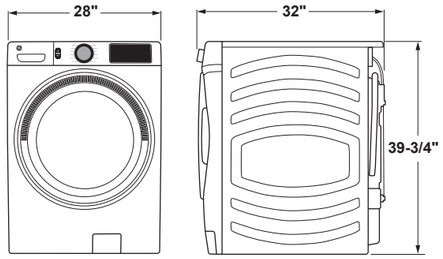

FRONT VIEW SIDE VIEW

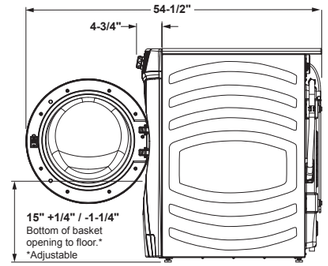

SIDE VIEW WITH DOOR OPEN

*With leveling leg adjust.

GE FRONT LOAD WASHER/DRYER PEDESTALS AND RISERS

PEDESTAL DIMENSIONS

For 28" width front load washers and dryers.

GFP1528SNWW-White
GFP1528PNDG-Diamond Gray
GFP1528PNSN-Satin Nickel
GFP1528PNRS-Sapphire Blue
This optional 16" pedestal raises the door opening and height of the washer or dryer.

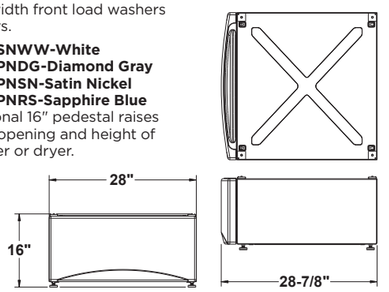

FRONT VIEW SIDE VIEW

RISER DIMENSIONS

For 28" width front load washer and dryers.

GFR0728SNWW-White
GFR0728PNDG-Diamond Gray
GFR0728PNSN-Satin Nickel
GFR0728PNRS-Sapphire Blue
This optional 7" riser raises the door opening and height of the washer or dryer while remaining ADA compliant.

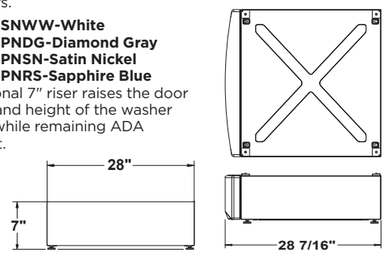

FRONT VIEW SIDE VIEW

Above illustrations intended for dimensional reference only.
Refer to photography for actual product appearance.

GE FRONT LOAD WASHERS/DRYERS (STACKED)

STACKED DIMENSIONS (IN INCHES)

GFW850/GFD85, GFW650/GFD65, GFW550/GFD55, GFW510/GFD55/GFV55

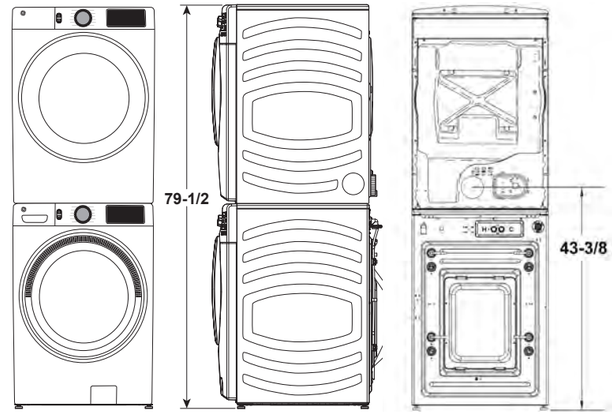

FRONT VIEW SIDE VIEW REAR VIEW

See page 275 for warranty information.

FRONT LOAD DRYERS

	GE		
	GFD85ESPN/GSPN GFD85ESSN/GSSN	GFD65ESPN/GSPN GFD65ESSN/GSSN	GFD55ESPN/GSPN GFD55ESSN/GSSN GFV55ESSN
CAPACITY			
Cubic feet	7.8	7.8	7.8
FEATURES			
ENERGY STAR® certified	●	●	●
UFAS/ADA*	● / ●	● / ●	● / ●
Moisture sensor	Sensor Dry	Sensor Dry	Sensor Dry
Control type	Electronic LED	Electronic LED	Electronic LED
Vent Sensing	●	●	●
Cycle countdown	with LED indicators	with LED indicators	with LED indicators
Cycle status lights	●	●	●
Dual thermistors	●	●	●
Heat selections	5	5	5
Steam Refresh	●	●	
Steam Dewrinkle	●	●	
eDry™ option	●	●	●
Delay Dry	●	●	●
Quick Dry	●	●	●
Number of cycles	12	12	10
Bulky/Bedding	●	●	●
Cotton cycle	●	●	●
Custom cycle (My Cycle)	Using SmartHQ App™	Using SmartHQ App	●
Delicate cycle	●	●	●
Normal/mixed loads cycle	●	●	●
Optional dryness levels—Damp	●	●	●
Optional dryness levels—Dry	●	●	●
Optional dryness levels—Less dry	●	●	●
Optional dryness levels—More dry	●	●	●
Optional dryness levels—Extra dry	●	●	
Timed dry—actual mins on timer	90	90	90
Add Time	●	●	●
Reduce Static	●	●	
WiFi Connect	●	●	●
Washer Link	●		
Damp Dry signal/Damp Alert	●	●	●
Dryer interior light	LED	LED	LED
90-ft. extended venting capability	●	●	90-ft. (GFD)/ 200-ft. (GFV)
End-of-cycle signal	Adjustable	Adjustable	Adjustable
Front serviceable	●	●	●
Door style	See-thru glass	See-thru glass	See-thru glass
Drum interior	Stainless steel	Stainless steel	Stainless steel
Leveling legs	●	●	●
Reverse-a-Door	●	●	●
Exhaust options (electric/gas)	4/4	4/4	4/4
Handle	Outside pocket	Outside pocket	Outside pocket
Dryer rack option	WE01X22274	WE01X22274	WE01X22274
Optional pedestal	GFP1528	GFP1528	GFP1528
Optional riser	GFR0728	GFR0728	GFR0728
APPEARANCE			
Colors available**	WW DG, RS	WW SN	WW DG
WEIGHTS & DIMENSIONS			
Approx. shipping weight (lbs.) E/G	153/159	153/159	153/159
Flexible installation	Undercounter, stacked, side-by-side, built-in	Undercounter, stacked, side-by-side, built-in	Undercounter, stacked, side-by-side
LP conversion kit (sold separately)	WE25M87	WE25M87	WE25M87

*ADA-qualified based on Americans with Disabilities Act. UFAS compliant with the Uniform Federal Accessibility Standards.
**WW = White, DG = Diamond Gray, RS = Sapphire Blue, SN = Satin Nickel.

DRYER SPECIFICATIONS

EXHAUST OPTIONS

Electric/Gas:
For 7.8 cu. ft. there is 4-way venting (GFD85, GFD65, GFD55 GFV55).

CIRCUIT REQUIREMENTS

Electric:
An individual, properly grounded branch circuit, protected by a 30-amp circuit breaker or a time-delay fuse is required.

Electric dryer rating:
120V/208V, 4,300W, 23A, 60Hz – 7.8 cu. ft. dryers; 120V/240V, 5,600W, 25A, 60Hz – 7.8 cu. ft. dryers

Gas:
An individual, properly grounded branch circuit with a three-prong grounding-type receptacle, protected by a 15- or 20-amp circuit breaker or a time-delay fuse is required.

NEMA receptacle codes:
3-prong dryer cord/30A/4' long (cat #WX9X2) is for NEMA10-30R receptacle; 4-prong dryer cord/30A/4' long (cat #WX9X18) is for NEMA14-30R receptacle.

Gas dryer electric rating:
120V, 60Hz, 8A

Gas (BTU/HR):
20,000 for 7.8 cu. ft. dryers. Factory-equipped for natural gas. Tested for LP gas. LP gas supply requires an optional conversion kit: 7.8 cu. ft. model kits are WE25M87. Have a qualified gas technician install a conversion kit. See dryer ducting information for proper installation.

Dryer note:
Dryer wall outlet must be located within 36" of service cord entry and accessible when dryer is mounted in position.

WASHER SPECIFICATIONS

Circuit requirements: An individual, properly grounded branch circuit, with a three-prong grounding-type receptacle, protected by a 15- or 20-amp circuit breaker or time-delay fuse is required.

Electrical requirements: 120V, 60 Hertz, 12.0 Amps

See pub. no. 31-2819 for installation information.

DRYER DIMENSIONS (IN INCHES)
GFD85E, GFD85G, GFD65E, GFD65G, GFD55E, GFD55G, GFV55

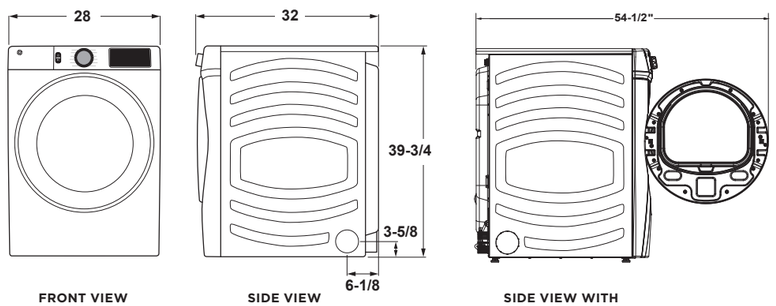

FRONT VIEW | SIDE VIEW | SIDE VIEW WITH DOOR OPEN

CONNECTIONS (IN INCHES)
GFD85E, GFD85G, GFD65E, GFD65G, GFD55E, GFD55G, GFV55

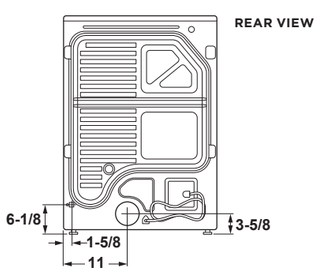

FRONT LOAD COMBINATION WASHER/DRYER

	GE
	GFQ14ESSNWW
CAPACITY	
Cubic feet	2.4
FEATURES	
Wash/rinse temperatures	5
Water levels	Load sensing—Adaptive fill
Internal water heater	●
Number of cycles	16
Specialty cycles	4
Basket Clean	●
Detergent dispenser (liquid/powder)	●
Bleach dispenser	●
Fabric softener dispenser	●
Control type	Electronic/ Electronic touch/ LED
End-of-cycle signal	●
Wash/spin speed combinations	5
RPM spin speed	1,450
(ATC) Auto Temp Control	●
Casuals	●
Sanitize	●
Cold wash	●
Optional soil levels	5
Extra rinse	●
Adaptive capabilities	●
Cycle countdown	●
Cycle status lights	●
Delay start	●
Drain & Spin	●
Rinse & Spin	Spin-only cycle
Speed Wash	●
Door style	Round
Noise package	Deluxe Quiet
Leveling legs	●
Stainless steel wash basket	●
Inlet hoses	●
Optional stacking kit	GFA24KITL
Drive system	Direct drive
APPEARANCE	
Colors available*	WW
WEIGHTS & DIMENSIONS	
Approx. shipping weight (lbs.)	203 lb.
POWER/RATINGS	
Integrated Modified Energy Factor (IMEF)	1.84

*WW = White

DIMENSIONS: GFQ14ESSNWW

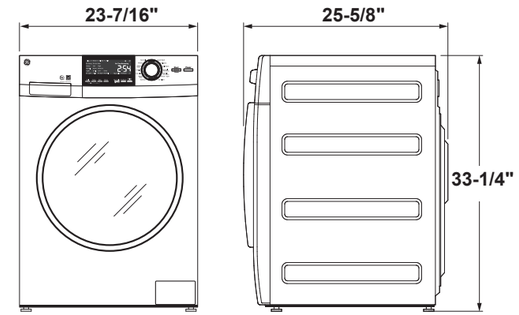

FRONT VIEW | SIDE VIEW

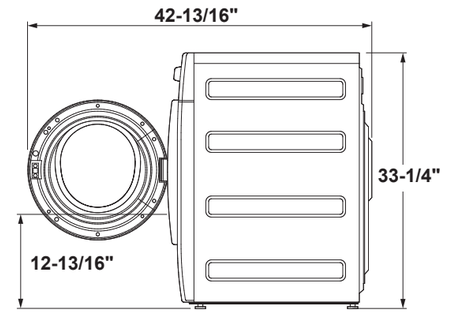

SIDE VIEW WITH OPEN DOOR

Above illustrations intended for dimensional reference only. Refer to photography for actual product appearance.

Above illustrations intended for dimensional reference only. Refer to photography for actual product appearance.

FRONT LOAD WASHER

	GE
	PAIR WITH CONDENSER DRYER
	GFW148SSM
CAPACITY	
Cubic feet	2.4 DOE*
FEATURES	
ENERGY STAR® certified	●
WiFi Connect	Optional (Requires part no. PBX23W00Y0)
Wash/rinse temperatures	5
Water levels	Automatic
Internal water heater	●
Number of cycles	14
Specialty cycles	Active Wear
Basket Clean	●
Detergent dispenser (liquid/powder)	Flow-thru timed
Bleach dispenser	
Fabric softener dispenser	Flow-thru timed
Control type	Electronic
End-of-cycle signal	●
Wash/spin speed combinations	5
RPM spin speed	1,400
(ATC) Auto Temp Control	●
Steam	●
Prewash	●
Colors/Normal	●
Delicates	●
Whites	●
Heavy duty	●
Towels	●
Casuals	●
Sanitize	●
Cold wash	●
Optional soil levels	●
2nd rinse	●
Adaptive capabilities	Load size
Cycle countdown	with LED indicators
Cycle status lights	●
Delay start	●
Drain & Spin	●
Rinse & Spin	●
Speed Wash	●
Door style	See-thru glass
Noise package	Deluxe Quiet
Leveling legs	●
Stainless steel wash basket	●
Inlet hoses	Included
Optional stacking kit	GFA24KITL
Drive system	Direct
APPEARANCE	
Colors available**	WW
WEIGHTS & DIMENSIONS	
Approx. shipping weight (lbs.)	170
Flexible installation	Undercounter, stacked, side-by-side
POWER/RATINGS	
Integrated Modified Energy Factor (IMEF)	2.2
Integrated Water Factor (IWF)	3.5

*Department of Energy.
**WW = White.

WASHER DIMENSIONS: GFW148SSL, GFW148SSM

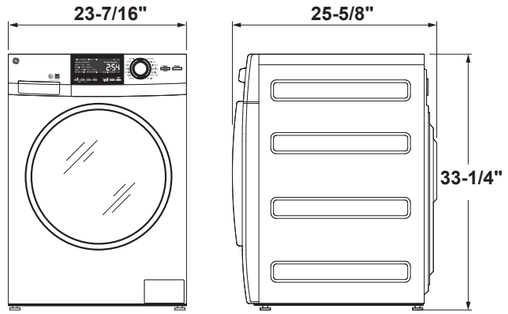

FRONT VIEW SIDE VIEW

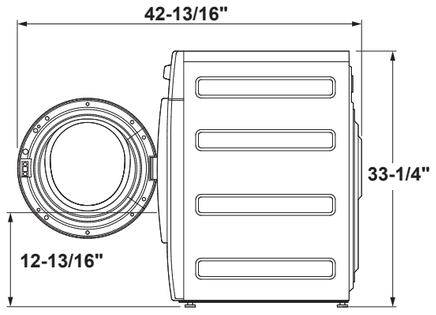

SIDE VIEW
WITH OPEN DOOR

Above illustrations intended for dimensional reference only.
Refer to photography for actual product appearance.

See page 275 for warranty information.

FRONT LOAD DRYER

	GE	
	CONDENSER DRYER	VENTED
	GFT14ESSM	GFD14ESSN
CAPACITY		
Cubic feet	4.1	4.3
FEATURES		
ENERGY STAR certified	●	●
WiFi Connect	Optional (Requires part no. PBX23W00Y0)	Optional (Requires part no. PBX23W00Y0)
Moisture sensor	Sensor Dry	Sensor Dry
Control type	Electronic LED	Electronic LED
Cycle countdown	with LED indicators	with LED indicators
Cycle status lights	●	●
Heat selections	4	4
Number of cycles	13	13
Specialty cycles	Active Wear	Active Wear
Cotton cycle	●	●
Delicate cycle	●	●
Wrinkle Free/Casuals		●
Mixed loads cycle	●	●
Antibacterial cycle	●	●
Speed Dry	●	●
Timed dry	●	●
Air Fluff	●	●
Towels	●	●
Warm up	●	●
Rack Dry	●	●
Extended tumble	●	●
Dewrinkle	●	●
Damp Dry signal	●	●
Dryer interior light	LED	●
Clean lint filter reminder	●	●
Delay start	24 hours	24 hours
End-of-cycle signal	●	●
Door style	See-thru glass	See-thru glass
Noise package	Quiet-by-Design	Quiet-by-Design
Drum interior	Stainless steel	Stainless steel
Leveling legs	●	●
Reverse-a-Door	●	●
Exhaust options (electric)	Ventless tank or direct drain	Rear, left, right, bottom
Optional stacking kit	GFA24KITL	GFA24KITL
APPEARANCE		
Colors available*	WW	WW
WEIGHTS & DIMENSIONS		
Approx. shipping wt. (lbs.)	110	103
Flexible installation	Undercounter, stacked, side-by-side	Undercounter, stacked, side-by-side
POWER/RATINGS		
Volts/Hertz/Wattage	208/240V/ 60Hz/2,800W	208/240V/ 60Hz/2,800W

*WW = White

CONDENSER DRYER DIMENSIONS: GFT14ESSM

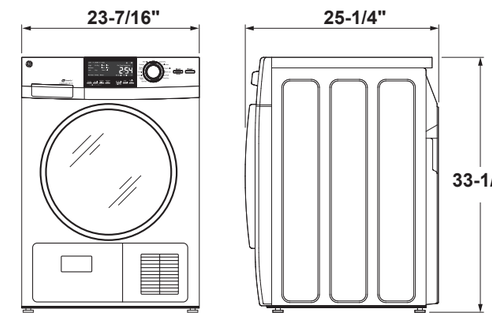

FRONT VIEW SIDE VIEW

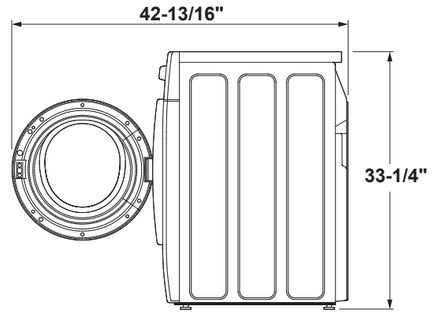

SIDE VIEW
WITH OPEN DOOR

STACKED DIMENSIONS GFW148SSM, GFT14ESSM

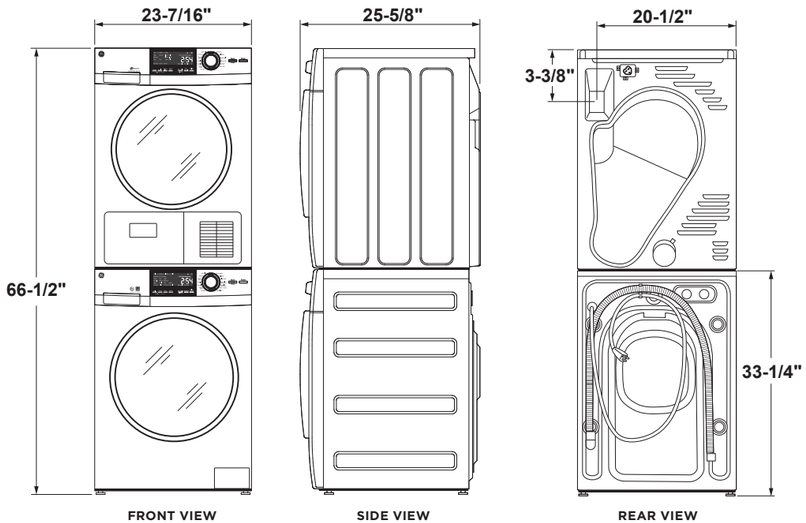

FRONT VIEW SIDE VIEW REAR VIEW

Above illustrations intended for dimensional reference only.
Refer to photography for actual product appearance.

See page 275 for warranty information.

TOP LOAD WASHERS

	GE								
	GTW845CPN GTW845CSN	GTW840CPN GTW840CSN	GTW725BPN GTW725BSN	GTW720BPN GTW720BSN	GTW500ASN	CONTRACT EXCLUSIVE GTW490ACJ	GTW465ASN	GTW335ASN	CONTRACT EXCLUSIVE GTW220ACK
CAPACITY									
Capacity cu. ft.	5.0 DOE*	5.2 DOE*	4.6 DOE*	4.8 DOE*	4.6 DOE*	4.4 DOE*	4.5 DOE*	4.2 DOE*	3.8 DOE*
Energy									
ENERGY STAR® certified	●	●	●	●	●	●			
CONTROLS									
Electronic	●	●	●	●	●	●	●	●	●
Status indicators	LED	LED	LED	LED	LED	LED	LED	LED	LED
Cycle countdown	●	●	●	●					
WASH SYSTEM									
Wash/rinse temps	6	6	6	6	6	6	6	6	6
Water levels	Precise Fill	Precise Fill	Precise Fill	Precise Fill	Precise Fill	Precise Fill	4 + Precise Fill	4 + Precise Fill	4 + Precise Fill
Wash basket	Stainless steel	Stainless steel	Stainless steel	Stainless steel	Stainless steel	Stainless steel	Stainless steel	Stainless steel	Stainless steel
Infusor/Agitator	Dual-action	Infusor	Dual-action	Infusor	Infusor	Infusor	Dual-action	Heavy-duty	Heavy-duty
Maximum spin speed	800 RPM	800 RPM	800 RPM	800 RPM	800 RPM	800 RPM	750 RPM	750 RPM	750 RPM
Deep Fill	●	●	●	●	●	●	●		
DISPENSERS									
Bleach	●	●	●	●	●	●	●	●	●
Fabric softener/ conditioner, Deep Rinse	●	●	●	●	Deep Rinse	Deep Rinse	●	Deep Rinse	Deep Rinse
WASH CYCLES									
Number of cycles	10 + Water Station	10 + Water Station	12	12	13	13	14	11	10
Whites	●	●	●	●	●	●	●	●	●
Colors	●	●	●	●	●	●	●	●	●
Casuals/Easy Care			●	●	●	●	●	●	●
Deep Clean/Heavy Duty	with Power Prewash	with Power Prewash	●	●	●	●	●		
Delicates	●	●	●	●	●	●	●	●	●
Jeans	●	●	●	●	●	●	●		
Towels/Sheets	●	●	●	●	●	●	●		
Bulky Items	●	●	●	●	●	●	●	●	●
Quick/Speed	●	●	●	●	●	●	●		
Active Wear	●	●	●	●	●	●	●	●	●
Sanitize with Oxi	●	●	●	●					
Cold Wash					●	●			
SOILS									
Extra heavy	●	●	●	●	●	●	●		
Heavy	●	●	●	●	●	●	●	●	●
Normal	●	●	●	●	●	●	●	●	●
Light	●	●	●	●	●	●	●	●	●
Extra light					●	●	●		
TEMPERATURES									
Hot	●	●	●	●	●	●	●	●	●
Warm	●	●	●	●	●	●	●	●	●
Colors	●	●	●	●	●	●	●	●	●
Cool	●	●	●	●	●	●	●	●	●
Cold	●	●	●	●	●	●	●	●	●
Tap Cold	●	●	●	●	●	●	●	●	●
SPECIAL CYCLES									
Water Station	●	●							
Stain Removal Guide			●	●	●	●			
Drain & Spin	●	●	●	●	●	●	●	●	●
Basket Clean					●	●	●		
Power Prewash	●	●							
ADDITIONAL									
SmartDispense™	●	●							
FlexDispense™			●	●					
WiFi Connect	●	●	Optional (Requires part no. PBX23W00Y0)	Optional (Requires part no. PBX23W00Y0)					
Warm Rinse	●	●	●	●					
Pre Soak/Auto Soak	●	●	●	●	●	●	●		
Stain Pretreat			●	●	●	●			
Deep Rinse	●	●	●	●	●	●	●	●	●
Extra Rinse	●	●	●	●	●	●	●		
Delay Wash	●	●	●	●					
My Cycle settings	●	●	●	●					
Inlet hoses						Included			Included
Lid	Soft-close clear glass	Soft-close clear glass	Soft-close clear glass	Soft-close clear glass					
Vibration Control	Advanced	Advanced	Advanced	Advanced	●	●	●	●	●
Drive system	Direct	Direct	Direct	Direct	Belt	Belt	Belt	Belt	Belt
Appearance									
Backsplash color***	White + Silver DG	White + Silver DG	White + Silver DG	White + Silver DG	Silver	White, White + Silver	White	White	White
Colors available***	WS DG	WS DG	WS DG	WS DG	WS	WW, WS	WW	WW	WW
Weights & Dimensions									
Approx. ship. weight (lbs.)	170	170	155	155	155	155	155	155	145
Ratings									
Integrated Modified Energy Factor (IMEF)	2.06	2.06	2.06	2.06	2.06	2.07	1.35	1.30	1.30
Integrated Water Factor (IWF)	4.3	4.3	4.3	4.3	4.3	4.1	7.0	8.2	8.2

*Department of Energy.
**In accordance with CEE High Efficiency specifications for residential clothes washers (effective 3/7/2015).
***WW = White, WS = White with Silver backsplash, DG = Diamond Gray.

See page 275 for warranty information.

WASHER DIMENSIONS FOR 5.2/5.0 CU. FT. CAPACITY

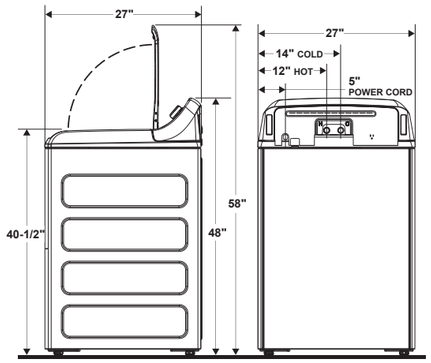

Side view Rear view

WASHER DIMENSIONS FOR 4.8/4.6 CU. FT. CAPACITY WITH GLASS LID

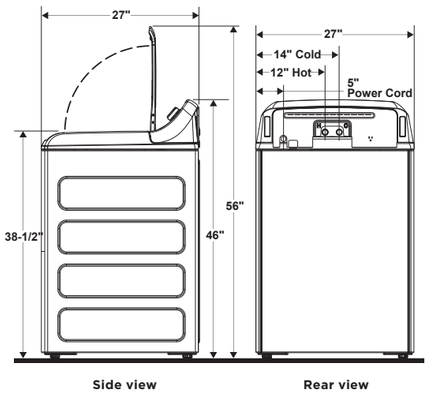

Side view Rear view

WASHER DIMENSIONS FOR 4.6, 4.5, 4.4, 4.2, 3.8 CU. FT. CAPACITY WITH METAL LID

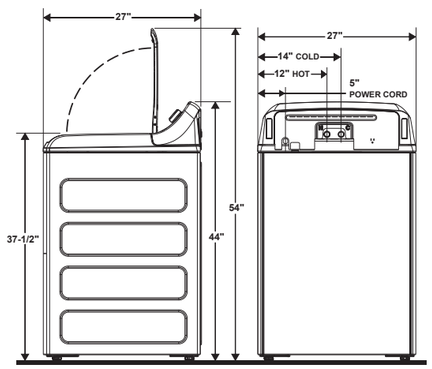

Side view Rear view

Above illustrations intended for dimensional reference only.
Refer to photography for actual product appearance.

WASHER SPECIFICATIONS

Circuit requirements: An individual, properly grounded branch circuit with a three-prong grounding-type receptacle, protected by a 15- or 20-amp circuit breaker or time-delay fuse is required.

Electrical rating: 115V, 60Hz, 10A

Washer note: Washer wall outlet must be located within 36" of service cord entry. Wall outlet must not be located behind dryer.

See page 275 for warranty information.

TOP LOAD MATCHING DRYERS

	GE					
	GTD84ECSN/GCSN GTD84ECPN/GCPN	GTD72EBSN/GBSN GTD72EBPN/GBPN	GTD45EASJ/GASJ	GTD42EASJ/GASJ GTX42EASJ/GASJ	GTD33EASK/GASK GTX33EASK/GASK	CONTRACT EXCLUSIVE GTX22EASK/GASK
CAPACITY						
Capacity cu. ft.	7.4	7.4	7.2	7.2/6.2	7.2/6.2	6.2
CONTROLS						
Electronic	●	●				
Electromechanical			●	●	●	●
Heat selections	4	4	4	4	3	3
DRY SYSTEM						
Clothing moisture sensor	Sensor Dry	Sensor Dry	Sensor Dry	Auto Dry	Auto Dry	Auto Dry
Temperature sensor	Dual thermistors	Dual thermistors	Thermostat	Thermostat	Thermostat	Thermostat
Dryer drum	Aluminized alloy	Aluminized alloy	Aluminized alloy	Aluminized alloy	Aluminized alloy	Aluminized alloy
SIGNALS						
End-of-cycle	Variable	Variable	Variable	Variable	Fixed	
DRY CYCLES						
Number of cycles	11 + Steam	12	4	4	3	3
Mixed loads	●	●				
Cottons	●	●	●	●	●	●
Perm Press/Casuals	●	●	●	●	●	●
Quick/Speed Dry	●	●				
Delicates	●	●	●	●		
SPECIAL CYCLES						
Steam	●					
Dewrinkle/Warm up	●	●	●	●		
Towels/Sheets	●	●				
Jeans	●	●				
Air Fluff (no heat)		●	●	●	●	●
Wrinkle Care/Extended Tumble	●	●	●	●		
Bulky Items	●	●				
eDry modifier	●	●				
Sanitize	●	●				
ADDITIONAL FEATURES						
ENERGY STAR® certified	●	●				
Blocked Vent Sensor	●					
WiFi Connect	●	Optional (Requires part no. PBX23W00Y0)				
Glass door	●	●				
Dryer interior light	LED	LED	●	●		
Extended venting capability	120 ft.	120 ft.	120 ft.	120 ft.	120 ft.	120 ft.
Reverse-a-Door	●	●	●	●	●	●
Delay Dry	●	●				
Damp Alert	●	●				
Lint filter reminder light	●	●				
Dryer rack	WE1M396	WE1M396	WE1M396	WE1M396	WE1M396	WE1M396
My Cycle settings	●	●				
Time control	90 min.	90 min.	80 min.	80 min.	80 min.	80 min.
APPEARANCE						
Backsplash color	White + Silver DG	White + Silver DG	Silver	White	White	White
Colors available*	WS DG	WS DG	WS	WW	WW	WW
WEIGHTS & DIMENSIONS						
Approx. shipping wt.–electric (lbs.)	125	121	115	115 (GTD) 108 (GTX)	118 (GTD) 112 (GTX)	102
Approx. shipping wt.–gas (lbs.)	137	133	117	117 (GTD) 111 (GTX)	121 (GTD) 115 (GTX)	105
LP conversion kit (sold separately)	WE25X0217	WE25X0217	WE25X0217	WE25X0217	WE25X0217	WE25X0217

*WW = White, WS = White with silver backsplash, DG = Diamond Gray.

See page 275 for warranty information.

TOP LOAD MATCHING DRYERS

DRYER DIMENSIONS FOR 6.2 CU. FT. CAPACITY

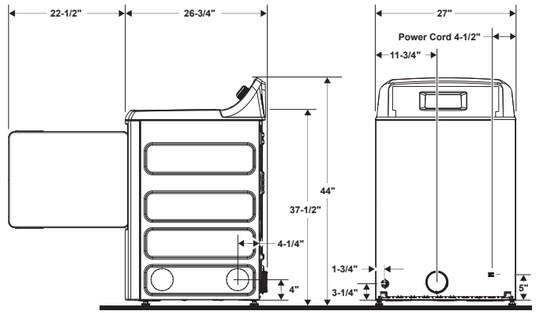

Side view Rear view

DRYER DIMENSIONS FOR GTD84

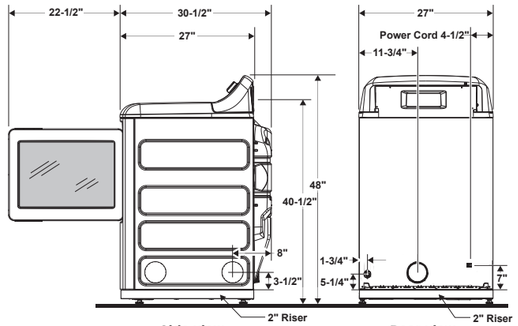

Side view Rear view

DRYER DIMENSIONS FOR 7.2 CU. FT. CAPACITY

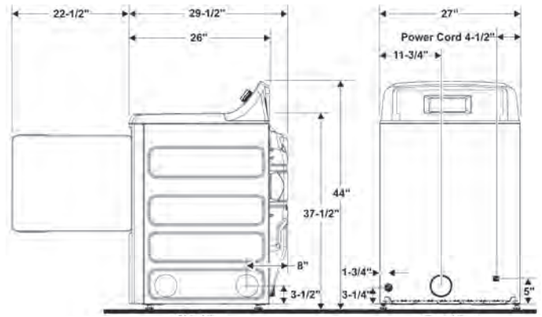

Side view Rear view

DRYER DIMENSIONS FOR GTD72

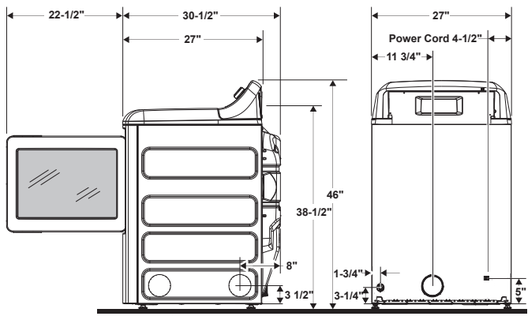

Side view Rear view

DRYER SPECIFICATIONS

EXHAUST OPTIONS:

Electric: 4-way via rear, right, left and bottom.

Gas: For 6.2, 7.2, 7.4 and 7.8 cu. ft. dryers, when viewed from the front of the unit, exhaust 3-way via rear, left and bottom. Dryer is shipped exhausted to the rear. Alternate exhausting knockouts are supplied.

Circuit requirements:

Electric: An individual, properly grounded branch circuit, protected by a 30-amp circuit breaker or a time-delay fuse is required.

Electric dryer rating:

240V, 5,600W, 24A, 60Hz — 6.2, 7.2 and 7.4 cu. ft. dryers
208V, 4,400W, 22A, 60Hz — 6.2, 7.2 and 7.4 cu. ft. dryers
240V, 5,000W, 25A, 60 Hz — 7.8 cu. ft. dryers
208V, 4,784W, 23A, 60 Hz — 7.8 cu. ft. dryers

Gas: An individual, properly grounded branch circuit with a three-prong grounding-type receptacle, protected by a 15- or 20-amp circuit breaker or a time-delay fuse is required.

NEMA receptacle codes:

3-prong dryer cord/30A/4' long (cat #WX9X2) is for NEMA10-30R receptacle.
4-prong dryer cord/30A/4' long (cat #WX9X18) is for NEMA14-30R receptacle.

Gas dryer electric rating:

120V, 60Hz, 6A – 6.2, 7.2 and 7.4 cu. ft. dryers
120V, 60Hz, 9A – 7.8 cu. ft. dryers

Gas (BTU/HR): 22,000 for 6.2, 7.2 and 7.4 cu. ft. dryers. 16,000 for 7.8 cu. ft. dryers. Factory-equipped for natural gas. Tested for LP gas. LP gas supply requires an optional conversion kit: 7.0 cu. ft. model kit is WE25X0217. 7.8 cu. ft. model kit is WE25M87. Have a qualified gas technician install a conversion kit. See dryer ducting information for proper installation.

Dryer note: Dryer wall outlet must be located within 36" of service cord entry and accessible when dryer is mounted in position.

POWER CORD LOCATIONS
6.2, 7.2 & 7.4 CU. FT. DRYERS

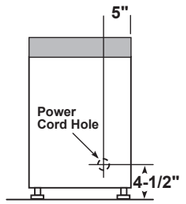

Rear view

Add 2" for GTD75

Above illustrations intended for dimensional reference only.
Refer to photography for actual product appearance.

See page 275 for warranty information.

PORTABLE/STATIONARY WASHERS & DRYERS

INDIVIDUAL WASHERS	GE GNW128PS GNW128SS
CAPACITY	
Capacity (cu. ft.)	2.8 DOE*
FEATURES	
Wash/spin speed combinations	1
Wash/rinse temperatures	4
Number of cycles	8
Regular	
Normal	●
Soak	●
Delicates	●
Speed Wash	●
Heavy Duty cycle	●
Deep Fill	●
Wash Rinse and/or Spin	●
Wash mechanism	Infusor
Bleach dispenser	●
Fabric softener dispenser	●
Automatic detergent dispenser	●
Tub lint filter	●
Washer lid type	Black
Spin speed	750 RPM
Easy-roll rollers	●
Basket material	Stainless steel
Fill & drain hoses included	●
APPEARANCE	
Colors available	White
WEIGHTS & DIMENSIONS	
Circuit requirements	120V, 60Hz, 15 or 20 Amps
Dimensions (HxWxD in inches)	37-2/5 x 24 x 24-1/2
Approx. shipping wt. (lbs.)	116

*Department of Energy.

INDIVIDUAL DRYERS	GE DSKS433EB	GE DSKP333EC* DSKS333EC
CAPACITY		
Capacity (cu. ft.)	3.6	3.6
FEATURES		
ADA compliant***		● / —
Dry control	Automatic	Automatic
Heat selections	4	3 (timer)
Number of dry cycles	3	3
Auto Perm. Press & Delicate	●	
Auto regular	●	●
Timed regular (min.)	140	150
Air Fluff (min.)	(Heat selection)	30
Separate start switch	●	●
Control location	Mid-band	Top Mid-band
Lint filter	Upfront	Upfront
APPEARANCE		
Colors available**	WW	WW
WEIGHTS & DIMENSIONS		
Exhaust options†	4-way	4-way—rear, bottom, left, right 4-way—rear, top, left, right
Circuit requirements	240/208V††, 60 Hertz, 30 Amps	120V, 60 Hertz, 15 Amps
Power cord	No cord	6 feet
Dimensions (HxWxD in inches)	33-1/4 x 23-7/8 x 24-1/2	33-1/4 x 23-7/8 x 24-1/2
Wall-mount kit (available at additional cost)	WMK-35	— WMK-35
Approx. shipping wt. (lbs.)	108	108

*DSKP333EC dryer comes equipped with casters.
**Colors available: WW = White.
***ADA-qualified based on Americans with Disabilities Act. UFAS compliant with the Uniform Federal Accessibility Standards.
†DSKS433EB and DSKS333EC are shipped exhausted through the top.
††Rear-mounted outlet on DSKS433EB (120V, 60 Hertz, 10 Amp, DSKS433EB and DSKS333EC approved for use with washer/dryer stack rack DSDR24F.)

Circuit requirements: An individual, properly grounded branch circuit of the proper voltage and frequency as specified on the rating plate, with no other appliances or fixtures in circuit, is required.

TOP VENT INSTALLATION DIMENSIONS (IN INCHES)

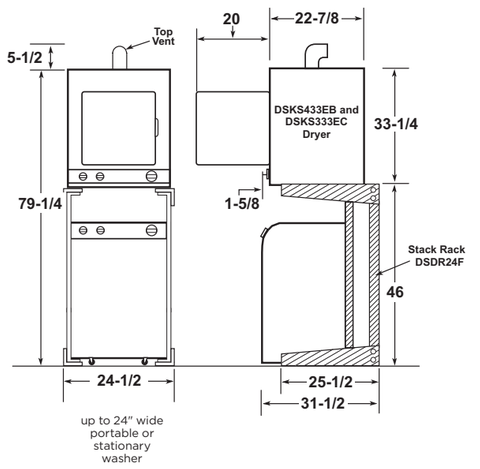

WALL-MOUNT INSTALLATION DIMENSIONS (IN INCHES)

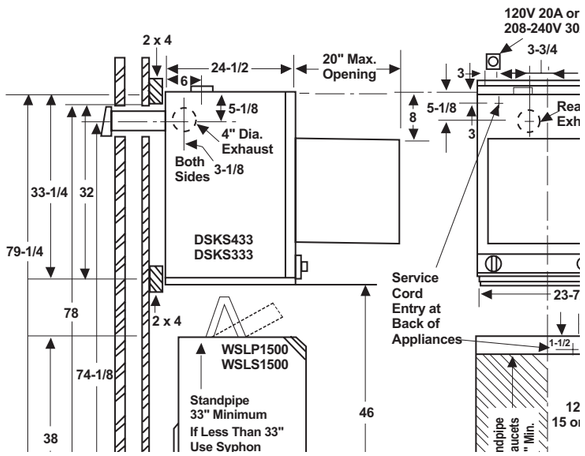

Listed by Underwriters Laboratories

Above illustrations intended for dimensional reference only.
Refer to photography for actual product appearance.

See page 275 for warranty information.

UNITIZED WASHERS & DRYERS

WASHERS	GE GUD27ESSM/GSSM GUD27ESPM/GSPM GUV27ESSM	GUD27EESN GUD27GESN	GUD24ESSM GUD24GSSM
CAPACITY			
Capacity (cu. ft.)	3.8 DOE*	3.9 DOE*	2.3 DOE*
CONTROLS			
Electronic	●	●	●
FEATURES			
Wash/spin speed combinations	1	1	1
Wash temperatures	6	6	6
Auto load sensing	4	●	●
Number of wash cycles	11	12	11
Deep rinse	●	●	●
Deep rinse & spin	●	●	●
Bleach/fabric softener dispensers	●	Bleach	●
Fill & drain hoses (included)	●	●	●
Drive system	Belt	Belt	Belt
Drive system WiFi Connect	Optional (Requires part no. PBX23W00Y0)		
Wash Mechanism	Agitator	Infusor	Agitator
DRYERS			
CAPACITY			
Capacity (cu. ft.)	5.9	5.9	4.4
CONTROLS			
Electromechanical	●	●	●
FEATURES			
Automatic dry control	●	●	●
Number of dry cycles	4	4	4
Cottons	●	●	●
Easy Care	●	●	●
Delicates	●	●	●
Timed dry	●	●	●
Quick Fluff	●	●	●
Dewrinkle	●	●	●
Control location	Mid-band	Mid-band	Mid-band
Exhaust options	3 way–rear, left, right	3 way–rear, left, right	3 way–rear, left, right
Lint filter	●	●	●
APPEARANCE			
Colors available**	WW DG WW	WW	WW
WEIGHTS & DIMENSIONS			
Dimensions (HxWxD in inches)	75-1/2 x 26-4/5 x 30-17/20***	75-7/8 x 26-3/4 x 30-7/8	74-1/2 x 23-3/4 x 27-1/4***
Approx. shipping wt. (lbs.)	271	279	241
LP conversion kit (sold separately)	WE25M74	WE25M74	WE25M73
RATINGS			
Integrated Modified Energy Factor (IMEF)	1.57	1.57	1.57
Integrated Water Factor (IWF)	6.5	6.5	6.5

*Department of Energy.
**WW = White, DG = Diamond Gray.
***Depth dimension assumes water hook-up is recessed in the wall.
Note: The third prong on GUD27ESSJ/GSSJ plug configuration is a flat spade type rather than a typical round probe. It requires a matching wall outlet.

Electrical requirements for unitized dryers

GUD27ESSJ: Electric dryer—This appliance should be connected to an individual, properly grounded branch circuit with 120/240V or 120/208V single-phase 60Hz electrical service and should be protected by 30-amp time-delay fuses or circuit breakers. This appliance is manufactured with the neutral connected to the frame. Power cord should be purchased separately.

GUD24ESSJ: Electric dryer—This appliance should be connected to an individual, properly grounded branch circuit with 120/240V single-phase 60Hz electrical service and should be protected by 30-amp time-delay fuses or circuit breakers. This appliance is manufactured with the neutral connected to the frame. Power cord should be purchased separately.
NOTE: THESE APPLIANCES ARE NOT APPROVED FOR 120-VOLT OPERATION.

GUD24GSSJ: Gas dryer—This appliance should be connected to an individual, properly grounded branch circuit with a three-prong grounding-type receptacle and 120-volt single-phase 60Hz electrical service and should be protected by 15- or 20-amp time-delay fuses or circuit breakers. This appliance is equipped with a 6-foot-long flexible UL® listed 15-amp power cord to match a 15-amp receptacle.

Gas rated input 10,500 BTU/HR. Factory equipped for natural gas. Tested for LP gas.

GUD27GSSJ: Gas dryer—This appliance should be connected to an individual branch circuit with 120-volt single-phase 60Hz electrical service and should be protected by 15-amp time-delay fuses or circuit breakers. This appliance is equipped with a 4-foot-long flexible UL listed 15-amp power cord to match a 15-amp receptacle.

Gas rated input 20,000 BTU/HR. Factory equipped for natural gas.

LP gas supply requires a conversion kit.
Kits: GUD27GSSJ—WE25M74; GUD24GSSJ—WE25M73

Have a qualified gas technician install a conversion kit before use.

Exhaust information
See *"Dryer Exhausting Information" on the next page.*
For complete information see installation instructions packed with the product.

DIMENSIONS (IN INCHES) GUD27ESSM/GSSM

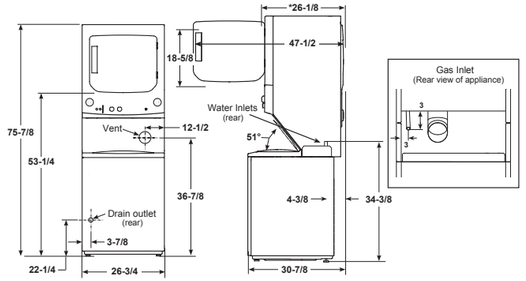

** Dimension represents door closed including handle and knobs.*
***NOTE:** With feet set at mid position, feet can be adjusted +/- 3/8".*

POWER CORD LOCATION GUD27ESSM/GSSM

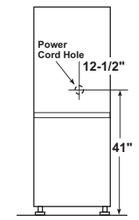

REAR VIEW

DIMENSIONS (IN INCHES) GUD24ESSM/GSSM

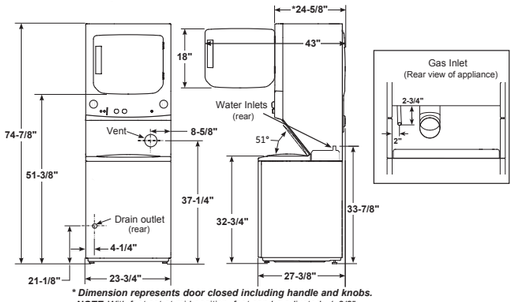

** Dimension represents door closed including handle and knobs.*
***NOTE:** With feet set at mid position, feet can be adjusted +/- 3/8".*

Above illustrations intended for dimensional reference only.
Refer to photography for actual product appearance.

See page 275 for warranty information.

GENERAL INFORMATION FOR DRYER EXHAUSTING

Minimizing the length of ductwork and the number of turns in an exhaust system minimizes the potential for lint to settle and accumulate in the exhaust duct and in the interior cabinet of the dryer. Refer to your specific dryer installation instructions for recommended duct length.

1. Exhaust duct terminations
All exhaust systems must be terminated in a manner that will prevent backdrafts from outside as well as prevent birds or other wildlife from building nests or taking refuge in the ductwork. The termination should present minimal resistance to the flow of exhaust air and should require little maintenance to prevent clogging. **The preferred termination is either a dampered wall cap with a 4"-wide opening or a movable louvered wall cap.** A 2-1/2" wall cap restricts airflow and increases drying time. Wall caps must be installed with the opening down, and installed at a minimum of 12" above ground level or any other obstruction. Special consideration should be given in areas where heavy snow drifts are likely to occur to ensure the wall cap does not become obstructed. Other types of terminations are acceptable providing **they are equivalent to the 4" dampered wall cap.** They must contain at least 14 square inches of ventilation area, afford adequate protection against backdrafts, and meet all other requirements listed here.

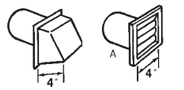

Exhaust ducts must not contain screens or other filtering devices which may become clogged with lint. The dryer exhaust must not terminate in an ordinary chimney, under an enclosed house floor or crawl space, or into an attic, since any accumulated lint could create a fire hazard and the moisture could cause damage. **Never terminate the exhaust into a common duct or plenum with a kitchen hood exhaust since the combination of grease and lint could create a fire hazard.**

2. Separation of turns in the ductwork
All turns in the exhaust system, external to the dryer itself, including the distance from the last turn to the dampered wall cap, should be separated by at least 4' of straight metal duct. This will reduce the added resistance which results from rapid changes in airflow direction inside the ducting. If two turns must be closer than 4', deduct 10' from the maximum lengths shown in the chart on the next page.

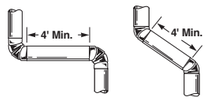

3. Treatment of turns other than 90°
One turn of 45° or less may be ignored. Two such turns should be treated as one 90°. Each turn over 45° should be treated as one 90°. Refer to specific dryer installation for maximum duct lengths and for allowable number of 90° bends. In determining the number of turns for an exhaust system, one 90° turn must be added for the bend made inside the cabinet whenever the dryer is exhausted through the right, left or bottom. NOTE: Some dryers are limited to only rear exhausting. Consult the installation instructions for the type of dryer being used.

4. Connecting the dryer to house vent
To reduce the risk of fire, never use plastic or other combustible ductwork.

Rigid Metal Transition Duct
- For best drying performance, a rigid metal transition duct is recommended.
- Rigid metal transition ducts reduce the risk of crushing and kinking.

UL listed Flexible Metal (Semi-Rigid) Transition Duct
- If rigid metal duct cannot be used, then UL listed flexible metal (semi-rigid) ducting can be used (Kit WX08X10077).
- Never install flexible metal duct in walls, ceilings, floors or other enclosed spaces.
- Total length of flexible metal duct should not exceed 8 feet (2.4m).
- For many applications, installing elbows at both the dryer and the wall is highly recommended (see illustrations). Elbows allow the dryer to sit close to the wall without kinking and/or crushing the transition duct, maximizing drying performance.
- Avoid resting the duct on sharp objects.

UL listed Flexible Metal (Foil-Type) Transition Duct
- In special installations, it may be necessary to connect the dryer to the house vent using a flexible metal (foil-type) duct. A UL listed flexible metal (foil-type) duct may be used ONLY in installations where rigid metal or flexible metal (semi-rigid) ducting cannot be used AND where a 4" diameter can be maintained throughout the entire length of the transition duct.
- In Canada and the United States, only the flexible metal (foil-type) ducts that comply with the "Outline for Clothes Dryer Transition Duct Subject 2158A" shall be used.
- Never install flexible metal duct in walls, ceilings, floors or other enclosed spaces.
- Total length of flexible metal duct should not exceed 8 feet (2.4m).
- Avoid resting the duct on sharp objects.

See Installation instructions for complete details.

5. Sealing of joints
All duct joints should avoid leaks. Duct joints should be made air- and moisture-tight by wrapping the overlapped joints with duct tape. The male ends of each section of duct should point away from the dryer. **Do not assemble the ductwork with screws or other fasteners that extend into the duct. They will serve as a collection point for lint.**

6. Water condensation
Condensation in a dryer exhaust system is caused by the moisture in the exhausted air contacting the cold inner surfaces of the ductwork. Condensation, which forms at the beginning of the drying cycle, will dissipate quickly after the ductwork becomes heated. If the ductwork passes through an area which keeps it cool throughout the drying cycle, considerable condensation within the duct can be expected. This can result in rapid accumulation of lint in the ductwork. Ductwork which runs through an unheated area or is situated adjacent to an air conditioning duct should be insulated to avoid such condensation problems. Joints should be tight to avoid leaks and, where feasible, the duct should be dropped 1/16" per foot toward the termination.

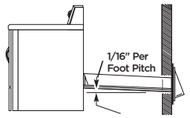

7. Accessibility for cleaning
Since it may be necessary from time to time to remove lint from the inside of the ductwork, it is important that the exhaust system be installed with a provision for periodic inspection and cleaning. Some provision should be made for access to turns and straight runs of duct installed in an enclosed area, such as above plastered ceilings. Special consideration should be given to the amount of maintenance required for roof caps on vertical installations, since the user cannot be expected to make frequent inspections or cleanings.

Single family–type dwellings
For more detailed information, refer to the installation instructions for the specific dryer model selected.

Mobile or manufactured home installation
Gas dryer installation must conform with local Gas Codes and with CGA B149.1 or B149.2 (Installation code for Gas Burning Appliances and Equipment). All dryer Installations must conform to Manufactured Home Construction and Safety Standard, Title 24 CFR, Part 32-80. The dryer must be exhausted to the outdoors with the termination securely fastened to the mobile home structure. The exhaust MUST NOT be directed underneath the mobile home.

MULTI-UNIT DRYER INSTALLATION

Multi-unit systems
Accurate installation of a good dryer exhaust system in multi-family construction is especially important. The restrictions applied by this type of construction should cause the planner to be more concerned than in single-family construction.

When the length of the exhaust duct or the number of turns in the system exceeds the maximum limitations recommended by the dryer manufacturer, the planner must seek an alternate solution. One option is to install a common ducting system that is capable of handling the discharge of several dryers at various points along the system.

The scope of the subject is far too broad to be extensively described within this publication. Sufficient information is presented, however, to make the planner aware of the importance of special attention to the subject. Two types of common ducts are generally used: (1) the common dryer exhaust stack with an auxiliary roof fan and (2) the chimney exhaust.

Stack and chimney designs and exhaust fans must meet all local code requirements. It is suggested that professional engineering counsel should be sought in these matters. Dryers should be installed as close to the common duct as possible. Dryers' discharges must be offset to prevent one unit from exhausting directly into another.
See Illustration No. 1.

Illustration 1

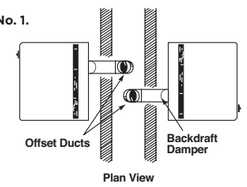

Common fan-assisted dryer exhaust stack (auxiliary roof fan systems)
The stack outlet **(see Illustration No. 2)** must be fitted to a continuous-duty exhaust fan rated to handle the stack air volume for the total number of dryers on the system. Periodic cleaning of the exhaust fan is necessary to maintain efficient operation. The bottom of the stack should contain a barometric damper to prevent drawing air through the dryers not in use, and a lint clean-out access door. The damper should be adjusted to just open with all dryers on and the continuous-duty exhaust fan operating. The weighted damper in the individual dryer ducts should be adjusted so that it will just close with all dryers off and the continuous-duty exhaust fan operating. The fan should be running at all times. The duct system from each individual dryer must meet the turn and length requirements as noted on the next page. The required stack diameter for air volumes of 200 CFM to 3,000 CFM can be determined from **Illustration No. 4** and calculations on the chart to the right.

Illustration 2

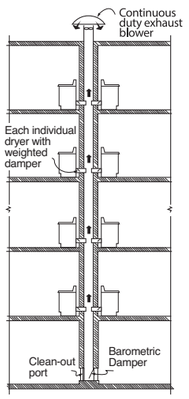

Illustration 4

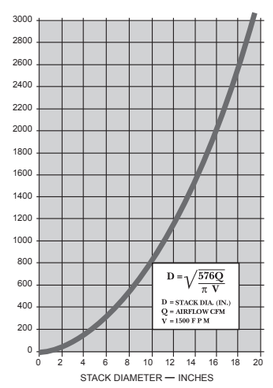

How to use Illustration No. 4
Airflow value: 150 CFM. Assume installation contains eight (8) dryers operating at the same time. Stack air volume (Q) = 150 x 8 = 1200 CFM (Q) is air volume that stack must be capable of handling in the event all dryers are running at one time. Therefore, the stack diameter must be:

Or read directly from Illustration No. 4 by placing 1200 on the vertical scale and reading 12 on the horizontal scale. The stack diameter should be 12 inches to handle the required volume of air and the continuous-duty exhaust blower should be rated to handle this volume while maintaining an air velocity of 1500 ft./minute.

$$D = \sqrt{\frac{576Q}{\pi V}} = \sqrt{\frac{576 \times 1200}{\pi \times 1500}} = \sqrt{147} \cong 12 \text{ inches}$$

See page 275 for warranty information.
Above illustrations intended for dimensional reference only. Refer to photography for actual product appearance.

MULTI-UNIT DRYER INSTALLATION
(CONTINUED)

Chimney exhaust system
The chimney must be fire-resistant and large enough to accommodate the volume of air exhausting from the dryers. Consideration must be made for lint buildup, excessive chimney pressures, backdrafts and other technical factors which will influence the performance and the safety of the system. A lint clean-out access door should be included at the bottom of the chimney. Each dryer duct must have a 4"-diameter backdraft damper, adjusted so that it will just close with the dryer inoperative. This will prevent the exhaust and lint of one dryer from going into another dryer and its room. The duct system for each individual dryer must meet the turn and length requirements as noted on this page.
Use the specs for a 2-1/2" exhaust hood for proper dryer performance. Include the 90° elbow and all ducting in the chimney in your calculations. The 22" (minimum) of vertical ducting in the chimney reduces back pressure and is required for proper dryer performance. **See Illustration No. 3.**

Illustration 3

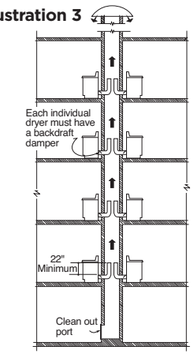

SPECIAL INSTALLATION REQUIREMENTS

Alcove or closet installation
- If your dryer is approved for installation in an alcove or closet, it will be stated on a label on the dryer back.
- The dryer MUST be exhausted to the outdoors. See exhaust information on this page and installation instructions.
- Minimum clearances between dryer cabinet and adjacent walls or other surfaces are:
  1" front and rear
  1" top
- Closet doors must be louvered or otherwise ventilated and must contain a minimum of 60 sq. in. of open area. If this closet contains both a washer and a dryer, doors must contain a minimum of 120 sq. in. of open area.
- No other fuel-burning appliance shall be installed in the same closet with a gas dryer.
- The closet should be vented to the outdoors to prevent gas pocketing in case of a gas leak in the supply line.

Bathroom or bedroom installation
- The dryer MUST be exhausted to the outdoors. See installation instructions.
- The installation must conform with the local codes, or in the absence of local codes, with the National Electric Code, NFPA70, and National Fuel Gas Code, NFPA54, for gas dryers.

Minimum clearances other than alcove or closet installations
- Minimum clearances to combustible surfaces:
  0" both sides
  1" rear

Side or bottom exhaust
- For 7.0 or 6.0 cu. ft. models, see installation instructions – WE25X10015.
- Unitized models do not require a kit for side venting.

For more information on venting kits and accessories, please call 1-800-GE-CARES.

DRYER EXHAUSTING INFORMATION

For complete information see installation instructions packed with dryer.

Important note:
- 6.0 and 7.0 cu. ft. dryers require additional parts to convert to side venting.
- GUD does not require a kit for side venting as rear elbow pivots 360°.

Ducting materials
For best performance, the dryer should be vented with 4" diameter all-rigid metal exhaust duct. If rigid metal duct cannot be used, then UL listed flexible metal (semi-rigid) ducting can be used (PM08X10085 or WX08X10085). In special installations, it may be necessary to connect the dryer to the house vent using a flexible metal (foil-type) duct. A UL listed flexible metal (foil-type) duct may be used ONLY in installations where rigid metal or flexible metal (semi-rigid) ducting cannot be used AND where a 4" diameter can be maintained throughout the entire length of the transition duct. Please see installation instructions packed with your dryer for complete instructions when using flexible metal (foil type) ducting. See installation instructions for complete information.

EXHAUST LENGTH CALCULATION:

1. Determine the number of 90° turns needed for your installation. If you exhaust to the side or bottom of dryer, add one turn.
2. The maximum length of 4" diameter rigid (aluminum or galvanized) duct which can be tolerated is shown in the table.
   See table in installation instructions. A turn of 45° or less may be ignored. Two 45° turns within the duct length should be treated as a 90° elbow. A turn over 45° should be treated as a 90° elbow.

Dryers **must** be exhausted to the outside.

Caution: For personal safety do not terminate exhaust into a chimney, under any enclosed house floor (crawl space), or into an attic, since the accumulated lint could create a fire hazard or moisture could cause damage. Never terminate the exhaust into a common duct or plenum with a kitchen exhaust, since the combination of lint and grease could create a fire hazard.

Exhaust ducts should be terminated in a dampered wall cap to prevent backdrafts, bird nesting, etc. The wall cap must also be located at least 12" above the ground or any other obstruction with the opening pointed down.

Above illustrations intended for dimensional reference only.
Refer to photography for actual product appearance.

DRYER EXHAUSTING INFORMATION—USE METAL DUCT ONLY VERTICAL AND HORIZONTAL DUCTING

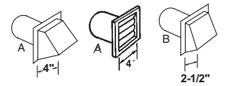

GE Domestic dryer models	Number of 90° turns	BEST PERFORMANCE Maximum length of 4" diam. **rigid metal** duct — Exhaust hood type **A** 4" opening	**B** 2-1/2" opening
Front Load Long Vent 7.0 cu. ft. capacity electric dryer (GFDL and GUV27E)	0	200 ft.	175 ft.
	1	185 ft.	165 ft.
	2	175 ft.	155 ft.
	3	165 ft.	145 ft.
	4	155 ft.	135 ft.
	5	145 ft.	125 ft.
Long Vent 6.2, 7.2 and 7.4 cu. ft. capacity electric & gas dryers (GTD33, GTD42, GTD45, GTD65, GTD72, GTD84, GTX22, GTX33 and GTX42)	0	120 ft.	90 ft.
	1	100 ft.	75 ft.
	2	85 ft.	65 ft.
	3	70 ft.	55 ft.
	4	60 ft.	45 ft.
	5	55 ft.	35 ft.
All 6.0 - 8.3 cu. ft. capacity models electric and gas dryers (GFDN, GFD, GTD, GTX, HTDP, HTDX)	0	90 ft.	60 ft.
	1	60 ft.	45 ft.
	2	45 ft.	35 ft.
	3	35 ft.	25 ft.
	4	25 ft.	15 ft.
DCVH480	0	90 ft.	60 ft.
	1	60 ft.	45 ft.
	2	45 ft.	35 ft.
	3	35 ft.	25 ft.
All 3.6 cu. ft. (DSKS, DSKP) electric dryers	0	46 ft.	37 ft.
	1	37 ft.	30 ft.
	2	30 ft.	22 ft.
	3	23 ft.	15 ft.
Laundry Center GUD27	0	56 ft.	42 ft.
	1	48 ft.	34 ft.
	2	40 ft.	26 ft.
	3	32 ft.	18 ft.
Laundry Center GUD24	0	43 ft.	36 ft.
	1	33 ft.	26 ft.
	2	24 ft.	16 ft.

For every extra 90° elbow, reduce the allowable vent system length by 10 ft. Two 45° elbows will be treated like one 90° elbow.
For the side exhaust installations, add one 90° elbow to the chart.
When calculating the total vent system length, you must add all the straight portions and elbows of the system (including the transition duct).
Laundry Center length includes factory-installed elbow that does not impact vent length.

DRYER EXHAUSTING LENGTH* GUD27ESSM/GSSM

RECOMMENDED MAXIMUM LENGTH

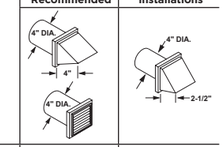

NUMBER OF 90° ELBOWS	EXHAUST HOOD TYPES — Recommended — RIGID METAL	Use only for short run installations — RIGID METAL
0	56 FT.	42 FT.
1	48 FT.	34 FT.
2	40 FT.	26 FT.
3	32 FT.	18 FT.

GUD24ESSJ/GSSJ

0	43 FT.	36 FT.
1	33 FT.	26 FT.
2	24 FT.	16 FT.

DRYER EXHAUST LENGTH* GUV27ESSM

BEST PERFORMANCE

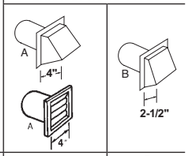

NUMBER OF 90° ELBOWS	MAXIMUM LENGTH OF 4" DIAMETER RIGID METAL DUCT — EXHAUST HOOD TYPES — **A** 4" OPENING	**B** 2-1/2" OPENING
0	200 FT.	175 FT.
1	185 FT.	165 FT.
2	175 FT.	155 FT.
3	165 FT.	145 FT.
4	155 FT.	135 FT.
5	145 FT.	125 FT.

For every extra 90° elbow, reduce the allowable vent system length by 10 ft. Two 45° elbows will be treated like one 90° elbow. For the side exhaust installations, add one 90° elbow to the chart.
*When calculating the total vent system length, you must add all the straight portions and elbows of the system (including the transition duct).
Laundry Center length includes factory-installed elbow that does not impact vent length.

See page 275 for warranty information.

ELECTRIC WATER HEATERS

	GE							
	GE50T10BAM GE50T08BAM	**GE50S10BAM GE50S08BAM**	**GE40T10BAM GE40T08BAM**	**GE40S10BAM GE40S08BAM**	**GE40L08BSM GE40L08BAM**	**GE30T10BAM GE30T08BAM**	**GE30S10BAM GE30S08BAM**	**GE30L08BSM GE30L08BAM**
Rated capacity (gallons)	50	50	40	40	36	30	30	26
Nominal capacity (gallons)	50	50	40	40	36	30	30	26
FEATURES								
Family size*	3–5	3–5	2–4	2–4	2-4	1–3	1–3	1–3
Control type	Thermostat	Thermostat	Thermostat	Thermostat	Thermostat	Thermostat	Thermostat	Thermostat
Temperature setting	90–150°F	90–150°F	90–150°F	90–150°F	90–150°F	90–150°F	90–150°F	90–150°F
Temperature setting factory default	120°F	120°F	120°F	120°F	120°F	120°F	120°F	120°F
Drain valve type	Brass Plastic	Brass Plastic	Brass Plastic	Brass Plastic	Plastic Plastic	Brass Plastic	Brass Plastic	Plastic Plastic
WEIGHT & DIMENSIONS								
Approx. shipping weight (lbs.)	154	161	139	133	145	113	111	114
Height to water connection (in.)	63-7/8	53	65-1/2	52-7/8	33-5/8	51-3/8	42	32-7/8
Tank dimensions (diameter x height in in.)	22 X 62-3/8	24 x 51-1/2	20 x 64	22 x 51-3/8	27 x 32-3/4	20 x 49-7/8	22 x 40-3/8	24 x 31-1/4
Connection sizes—hot water outlet (mnpt)	3/4"	3/4"	3/4"	3/4"	3/4"	3/4"	3/4"	3/4"
Connection sizes—water inlet (mnpt)	3/4"	3/4"	3/4"	3/4"	3/4"	3/4"	3/4"	3/4"
POWER/RATINGS								
Electrical circuit direct wired	240V/60Hz/30A min. dedicated	240V/60Hz/30A min. dedicated	240V/60Hz/30A min. dedicated	240V/60Hz/30A min. dedicated	240V/60Hz/30A min. dedicated	240V/60Hz/30A min. dedicated	240V/60Hz/30A min. dedicated	240V/60Hz/30A min. dedicated
Heating elements	Stainless steel Copper	Stainless steel Copper	Stainless steel Copper	Stainless steel Copper	Copper Copper	Stainless steel Copper	Stainless steel Copper	Copper Copper
Element density	Low High	Low High	Low High	Low High	High High	Low High	Low High	High High
Lower element (watts)	5,500	5,500	5,500	5,500	5,500	5,500	5,500	5,500
Upper element (watts)	5,500	5,500	5,500	5,500	5,500	5,500	5,500	5,500
Uniform energy factor (UEF)	0.93	0.93	0.92	0.92	0.92	0.92	0.92	0.92
First hour rate (FHR) (gallons)	76	76	65	66	63/61	54	53	58/53
Operating water pressure	20–125 psi	20–125 psi	20–125 psi	20–125 psi	20–125 psi	20–125 psi	20–125 psi	20–125 psi
WARRANTY								
Parts warranty	10/8 years	10/8 years	10/8 years	10/8 years	8/8 years	10/8 years	10/8 years	8/8 years

*Household sizing based on back-to-back showers, 8 minutes long.

ELECTRIC WATER HEATERS WITH ELECTRONIC CONTROL

	GE					
	GE50T12BLM GE50T10BLM	**GE50S12BLM GE50S10BLM**	**GE40T12BLM GE40T10BLM**	**GE40S12BLM GE40S10BLM**	**GE30T12BLM GE30T10BLM**	**GE30S12BLM GE30S10BLM**
Rated capacity (gallons)	50	50	40	40	30	30
Nominal capacity (gallons)	50	50	40	40	30	30
FEATURES						
Family size*	3–5	3–5	2–4	2–4	1–3	1–3
Control type	Electronic with digital display and app	Electronic with digital display and app	Electronic with digital display and app	Electronic with digital display and app	Electronic with digital display and app	Electronic with digital display and app
Operating modes	Normal/Vacation	Normal/Vacation	Normal/Vacation	Normal/Vacation	Normal/Vacation	Normal/Vacation
Temperature setting	100–140°F	100–140°F	100–140°F	100–140°F	100–140°F	100–140°F
Temperature setting factory default	120°F	120°F	120°F	120°F	120°F	120°F
Drain valve type	Brass Plastic	Brass Plastic	Brass Plastic	Brass Plastic	Brass Plastic	Brass Plastic
Built-in WiFi with app	●	●	●	●	●	●
Diagnostic feedback	●	●	●	●	●	●
Sensing anode	● / —	● / —	● / —	● / —	● / —	● / —
WEIGHT & DIMENSIONS						
Approx. shipping weight (lbs.)	154	161	139	133	113	111
Height to water connection (in.)	63-7/8	53	65-1/2	52-7/8	51-3/8	42
Tank dimensions (diameter x height in in.)	22 x 62-3/8	24 x 51-1/2	20 x 64	22 x 51-3/8	20 x 49-7/8	22 x 40-3/8
Connection sizes—hot water outlet (mnpt)	3/4"	3/4"	3/4"	3/4"	3/4"	3/4"
Connection sizes—water inlet (mnpt)	3/4"	3/4"	3/4"	3/4"	3/4"	3/4"
POWER/RATINGS						
Electrical circuit direct wired	240V/60Hz/30A min. dedicated	240V/60Hz/30A min. dedicated	240V/60Hz/30A min. dedicated	240V/60Hz/30A min. dedicated	240V/60Hz/30A min. dedicated	240V/60Hz/30A min. dedicated
Heating elements	Stainless steel Copper	Stainless steel Copper	Stainless steel Copper	Stainless steel Copper	Stainless steel Copper	Stainless steel Copper
Element density	Low High	Low High	Low High	Low High	Low High	Low High
Lower element (watts)	5,500	5,500	5,500	5,500	5,500	5,500
Upper element (watts)	5,500	5,500	5,500	5,500	5,500	5,500
Uniform energy factor (UEF)	0.93	0.93	0.92	0.92	0.92	0.92
First hour rate (FHR) (gallons)	78	75	66	65	59	60
Operating water pressure	20–125 psi	20–125 psi	20–125 psi	20–125 psi	20–125 psi	20–125 psi
WARRANTY						
Parts warranty	12/10 years	12/10 years	12/10 years	12/10 years	12/10 years	12/10 years

*Household sizing based on back-to-back showers, 8 minutes long.

See page 275 for warranty information.

FLEXIBLE-CAPACITY ELECTRONIC WATER HEATERS

	GE		
	GE50S10BMM	**GE40S10BMM**	**GE30S10BMM**
Rated capacity at normal setting (gallons)	50	40	30
Capacity at X-High setting* (gallons)	80	64	48
FEATURES			
Family size on X-High setting**	3-6	2-5	1-4
Control type	Electronic with digital display	Electronic with digital display	Electronic with digital display
Operating modes	Normal/Vacation	Normal/Vacation	Normal/Vacation
Integrated, electronic mixing valve	●	●	●
Capacity settings	Normal/High/X-high	Normal/High/X-high	Normal/High/X-high
Temperature setting	100–140°F	100–140°F	100–140°F
Temperature setting factory default	120°F	120°F	120°F
Drain valve type	Brass	Brass	Brass
Built-in WiFi with app	●	●	●
Diagnostic feedback	●	●	●
Sensing anode rod	●	●	●
WEIGHT & DIMENSIONS			
Approx. shipping weight (lbs.)	171	143	121
Height to water connection (in.)	61	60-7/8	49-7/8
Tank dimensions (diameter x height in in.)	24 x 59-1/2	22 x 59-3/8	22 x 48-3/8
Connection sizes—hot water outlet (mnpt)	3/4"	3/4"	3/4"
Connection sizes—water inlet (mnpt)	3/4"	3/4"	3/4"
POWER/RATINGS			
Electrical circuit direct wired	240V/60Hz/30A min.	240V/60Hz/30A min.	240V/60Hz/30A min.
Heating elements	Stainless steel	Stainless steel	Stainless steel
Element density	Low	Low	Low
Lower element (watts)	5,500	5,500	5,500
Upper element (watts)	5,500	5,500	5,500
Energy factor	0.93	0.92	0.92
First hour rating (FHR) (gallons)	75 (normal setting)	65 (normal setting)	59 (normal setting)
Operating water pressure	20-125 PSI	20-125 PSI	20-125 PSI
WARRANTY			
Parts warranty	10 years	10 years	10 years

*Versus comparable water heater without mixing valve at 120° F setting and 58° F inlet water temperature.
**Household sizing based on back-to-back showers, 8 minutes long.

See page 275 for warranty information.

TANKLESS ELECTRIC WATER HEATERS

	GE							
	GE04SNLPDG	**GE06SNHPDG**	**GE08SNHPDG**	**GE11SNHPDG**	**GE15SNHPDG**	**GE18SNHPDG**	**GE24DNHPDG**	**GE27DNHPDG**
FEATURES								
Fuel type	Electric	Electric	Electric	Electric	Electric	Electric	Electric	Electric
Temperature setting	86-140° F Range	86-140° F Range	86-140° F Range	86-140° F Range	86-140° F Range	86-140° F Range	86-140° F Range	86-140° F Range
Temperature setting factory default	105° F	105° F	105° F	105° F	105° F	105° F	105° F	105° F
Activation flowrate (GPM)	≤ 0.3	≤ 0.3	≤ 0.4	≤ 0.4	≤ 0.4	≤ 0.5	≤ 0.5	≤ 0.5
Capacity (GPM) @ 37 F rise	0.3	0.5	0,7	1.1	1.5	2.0	2.7	3.0
Capacity (GPM) @ 42 F rise	0.3	0.5	0.8	1.3	1.7	2.1	2.9	3.3
Capacity (GPM) @ 47 F rise	0.4	0.6	0.8	1.3	1.8	2.3	3.1	3.4
Capacity (GPM) @ 52 F rise	0.4	0.7	0.9	1.5	2.0	2.4	3.4	3.8
Capacity (GPM) @ 57 F rise	0.5	0.7	1.1	1.7	2.1	2.6	3.6	4.2
Capacity (GPM) @ 62 F rise	0.5	0.9	1.3	1.9	2.3	2.9	3.9	4.4
Capacity (GPM) @ 67 F rise	0.6	1.1	1.6	2.2	2.6	3.4	4.6	5.1
Capacity (GPM) @ 72 F rise	0.7	1.2	1.7	2.5	2.9	3.8	5.3	5.4
Capacity (GPM) @ 77 F rise	0.8	1.4	2.0	2.8	3.4	4.5	6.0	6.2
Controls	Adjust degree Fahrenheit/Celsius. Adjustable Temperature. Digital Electronic Control							
Installation location	Indoor	Indoor	Indoor	Indoor	Indoor	Indoor	Indoor	Indoor
Integrated safety devices	Flow sensor/High-limit thermostat (on each heating element). Inlet Temperature Sensor. Material Rated for Ignition Containment. Outlet Temperature Sensor.							
Maximum outlet temperature (F)	140	140	140	140	140	140	140	140
Point of use	Yes	Yes	Yes	Yes	Yes	Yes	Yes	Yes
Temperature adjustment amount (degree)	1	1	1	1	1	1	1	1
Uniform energy factor (UEF)	>0.91	>0.91	>0.91	>0.91	>0.91	>0.91	>0.91	>0.91
Water connection location	Bottom	Bottom	Bottom	Bottom	Bottom	Bottom	Bottom	Bottom
Cold/hot water connections (inches)	1/2" Cold Water Inlet; 1/2" Hot Water Outlet	1/2" Cold Water Inlet; 1/2" Hot Water Outlet	1/2" Cold Water Inlet; 1/2" Hot Water Outlet	1/2" Cold Water Inlet; 1/2" Hot Water Outlet	1/2" Cold Water Inlet; 1/2" Hot Water Outlet	3/4" Cold Water Inlet; 3/4" Hot Water Outlet	3/4" Cold Water Inlet; 3/4" Hot Water Outlet	3/4" Cold Water Inlet; 3/4" Hot Water Outlet
Max. operating pressure (psi)	150	150	150	150	150	150	150	150
Min. operating pressure (psi)	25	25	25	25	25	25	25	25
APPEARANCE								
Installation	Wall Mounted	Wall Mounted	Wall Mounted	Wall Mounted	Wall Mounted	Wall Mounted	Wall Mounted	Wall Mounted
WEIGHT & DIMENSIONS								
Overall depth	3.4	2.4	3.7	3.7	2.4	3.7	3.4	2.4
Overall height	9.8	14.1	15.2	15.2	14.2	15.2	9.8	14.2
Overall width	10	8.5	10.2	10.2	8.5	10.2	10	8.5
Approximate shipping weight	6	6	10	10	10	15	15	15
Net weight	5	5	10	10	10	14	14	14
POWER/RATINGS								
Amps	29.2	22.9	33.3	45.8	60.8	75.0	100.0	112.5
Electrical circuit required	30 Amp	30 Amp	40 Amp	50 Amp	70 Amp	40 Amp (x2)	40 Amp (x3)	40 Amp (x3)
Power rating-kW (derated for 208 V)	3.5	5.5 (4.8)	8 (6.9)	11 (9.5)	14.6 (11.3)	18 (15.6)	24 (20.8)	27 (23.4)
Voltage (max.)	120.0	240.0	240.0	240.0	240.0	240.0	240.0	240.0
Voltage (min.)		208.0	208.0	208.0	208.0	208.0	208.0	208.0
WARRANTY								
Warranty	5-year limited replacement							

SOLAR WATER HEATERS

	GE		
	GT50C10BAM GEOSPRING™ SOLAR	**GT40C10BAM** GEOSPRING SOLAR	**GT25C10BAM** GEOSPRING SOLAR
Rated capacity (gallons)	51	38	24
FEATURES			
Configuration	Integrated collector storage	Integrated collector storage	Integrated collector storage
Cold/hot water connections (in.)	3/4 mnpt	3/4 mnpt	3/4 mnpt
Collector inclination angle from horizontal	20° to 75°	20° to 75°	20° to 75°
Liquid type	Water	Water	Water
Maximum operating pressure (psi)	60	60	60
Net collector area (sq. ft.)	23	17	10
WEIGHT & DIMENSIONS			
Approx. weight (with mount, no water) (lbs.)	168	125	83
Approx. weight (with mount, with water) (lbs.)	593	441	279
Collector outer dimensions (in.)	86 x 43 x 8	86 x 32 x 8	86 x 20 x 8
Maximum height mount 45°/30° (in.)	36/28	28/22	19/16
WARRANTY			
Parts warranty	10 years	10 years	10 years

WATER SOFTENERS

		GE				
		GXSHC40N	**GXMH31H**	**GXSH45V**	**GXSH40V**	**GXSF30V**
CAPACITY						
Capacity (grains)		40,000	31,100	45,100*	40,000*	30,100
FEATURES						
WiFi Connect		● Water Usage Tracking Water Flow Alerts Remote Water Shutoff Salt Reminders				
Efficiency (grains per lb.-salt)		5,100	4,240**	5,090**	5,100**	4,700**
Max. hardness removal (gpg)		110	120	160	110	95
Max. clear water iron reduction (ppm)		8	3	10	8	8
Resin filter type		Standard mesh	Standard mesh	Standard mesh	Standard mesh	Standard mesh
Resin quantity (cu. ft.)		1.1	.98	1.25	1.1	.83
Activated charcoal quantity (cu. ft)		N/A	.26	N/A	N/A	N/A
Resin tank size (in.)		9 x 40	10 x 40	10 x 40	9 x 40	9 x 35
Salt capacity (lbs.)		230	230	230	230	200
Regeneration time (min.)		94 to 134	105 to 152	105 to 152	94 to 134	73 to 104
Service flow rate (at 15 psi drop)		9.5	8	9.5	9.5	7.5
Installation pack		●	●	●	●	●
Batteryless memory		●	●	●	●	●
Electronic controls		●	●	●	●	●
SmartSoft™ technology		●	●	●	●	●
Custom Select™ blending valve		●	●	●	●	
Salt Saver button/light		Automatic	●	●	●	
"Days to Empty" indicator		●	●	●	●	●
Low salt indicator		●	●	●	●	●
Status light indicator		●	●	●	●	●
Sediment filter		●	●	●	●	
Audible alarm		●	●	●	●	●
Advanced system monitor		●		●	●	
Valve size		High flow	High flow	High flow	High flow	Standard flow
Plumbing connections		Up to 1-1/4"	Up to 1-1/4"	Up to 1-1/4"	Up to 1-1/4"	Up to 1"
Water supply maximum clear water iron (ppm)***		8	3	10	8	8
Water pressure limits (minimum-maximum psi)†		20-125	20-125	20-125	20-125	20-125
Rated capacity at chlorine concentration†† of:	.050 ppm		2,282,000 gal.			
	.075 ppm		1,520,000 gal.			
	1.0 ppm		1,140,000 gal.			
	1.5 ppm		760,000 gal.			
	2.0 ppm		570,000 gal.			
APPEARANCE						
Style		Sculpted	Sculpted-tall	Sculpted-tall	Sculpted-tall	Sculpted-short
Unit color/trim		Light gray/Light blue	Light gray/Blue	Light gray/Dark gray	Light gray/Dark gray	Light gray/Dark gray
Electronic demand driven		●	●	●	●	●
WEIGHTS & DIMENSIONS						
Approx. ship. wt. (lbs.)		107	119	119	105	91
Overall W x H x D (in.)		14 -7/8 x 47-5/8 x 22-7/16	14-7/16 x 47-5/8 x 22-7/16	14-7/16 x 47-5/8 x 22-7/16	14-7/16 x 47-5/8 x 22-7/16	14-7/16 x 43-1/4 x 22-7/16
POWER/RATINGS						
Electrical rating		24V, 60Hz	24V, 60Hz	24V, 60Hz	24V, 60Hz	24V, 60Hz

This system conforms to NSF/ANSI 42 & 44 for the specific performance claims as verified and substantiated by test data.
*Testing was performed using pellet grade sodium chloride as the regenerate salt.
**Efficiency rating is valid only at the lowest stated salt damage. These softeners were efficiency rated according to NSF/ANSI 44.
***Extent of iron removal may vary with conditions. The capacity to reduce clear water iron is substantiated by WQA test data. State of Wisconsin requires additional treatment if water supply contains greater than 5 ppm clear water iron.
†Canada working pressure limits: 1.4-7.0 kg/cm2.
††Typical residential chlorine concentration is 0.5 to 1.0 ppm.
Important: All units must be installed according to local codes.
Note: Before installing, see installation instructions packed with product for complete details, or call GE QuickSpecs 800-432-3729.

WHOLE HOUSE FILTRATION SYSTEM

	GE					
	GXWH70M	**GXWH50M**	**GXWH40L****	**GXWH35F**** **GNWH38S**	**GXWH20S**	**GXWH04F****
FEATURES						
Feed water pressure (psi)	20 min.–125 max. 25 min.–125 max.	20 min.–125 max.	20 min.–100 max.	20 min.–125 max.	20 min.–125 max.	20 min.–125 max.
Feed water temperature	40°–100°F	40°–100°F	40°–100°F	40°–100°F	40°–100°F	40°–100°F
Rated flow rate (gpm)	4.0	4.0	4.0	4.0	4.0	4.0
Maximum flow rate (gpm)	12.0	12.0	15.0	15.0	12.0	12.0
WiFi Connect	Water Usage Tracking Water Flow Alerts Remote Water Shutoff Salt Reminders					
Filter change indicator	Connected alerts/monitoring on smartphone	Remote timer	Remote timer	Remote timer	Remote timer	Remote timer
Filters	FTHLM (Premium) FTHTM (Advanced) FTHPM (Basic)	FTHLM (Premium) FTHTM (Advanced) FTHPM (Basic)	FXHTC (Advanced) FXHSC (Basic)	FXHTC (Advanced) FXHSC (Basic)	FXWTC (Advanced) FXUSC (Basic) FXWPC (Basic) FXWSC (Basic)	FXWTC (Advanced) FXUSC (Basic) FXWPC (Basic) FXWSC (Basic)
Port size	3/4" (1" requires additional fitting)	3/4" (1" requires additional fitting)	1"	1"	3/4"	3/4"
Port threads/connections	3/4" Push-to-connect	3/4" Push-to-connect	NPT	NPT	NPT	NPT
Compatible pipe connections	Vertical or horizontal	Vertical or horizontal	Horizontal only	Horizontal only	Horizontal only	Horizontal only
Pressure relief valve	●	●	●	●	●	●
Mounting bracket & hardware	●	●	●	●	●	●
Wrench	N/A	N/A	●	●	●	●
APPEARANCE						
Style	Twist lock (open sump)	Twist lock (open sump)	Drop-in style (open sump)	Drop-in style (open sump)	Drop-in style (open sump)	Drop-in style (open sump)
Unit color	White	White	White	White	White	White
Filter housing	Clear	Clear	Clear	Opaque	Clear	Opaque
WEIGHTS & DIMENSIONS						
Approx. shipping wt. (lbs.)	11.50/16.01	10.8	9.75	7.50	4	2.50
Overall W x H x D (in.)	15-1/2 x 12-1/4 x 14-1/2	15-1/2 x 12-1/4 x 14-1/2	8 x 16-3/4 x 8	7-3/4 x 13-1/2 x 7-1/2	5-1/2 x 14-1/2 x 5-1/2	5-1/4 x 12-1/4 x 5-1/4

**Filter not included

See pages 274-276 for warranty information.

UNDER SINK REVERSE OSMOSIS FILTRATION SYSTEMS

	GE
	GXRQ18NBN GRNQ18NBN
CAPACITY	
Tank size (gallons)	3
FEATURES	
Faucet	Brushed Nickel
Faucet color	Brushed Nickel
Faucet monitor	Electronic timer
Faucet mounting	Vertical
Filter change indicator	LED
Feed water pressure (psi)	40 Min.-100 Max.
Feed water temperature	40°–100°F
Maximum feed water TDS (ppm)	2,000
Maximum hardness (@ 6.9 pH)	10 grains
Feed water pH limits	4-10
Daily production rate per NSF 58 (gallons per day)	
Process water used (per gal.)	10.4
Auto shut-off	●
FILTERS & MEMBRANE	
Quick-Replace filter design	●
RO membrane	FQ18MN
Filters	FQ18MN/FQ18PN
Filter life	6 months
Filtration level	Premium
Impurities reduced	95 impurities See chart to the right.
Fitting style	Push-to-connect
Water inlet valve	Saddle valve
Under sink installation kit	●
FILTER APPEARANCE	
Style	Compression
Unit color	White
Filter housing	White
Mounting bracket	Vertical
WEIGHTS & DIMENSIONS	
Approx. shipping weight (lbs.)	14.2
Overall W x H x D (in.)	9-1/4 x 3-5/8 x 12-1/2 14 x 9 x 9
POWER/RATINGS	
Faucet monitor power requirement	1 CR2032 lithium 3v (included)

*Theoretical tank capacity. When tested according to NSF/ANSI Standard 58 at 50 psig inlet pressure, tank capacity is 2.3 gallons.
**Feed water = 50 psig, 77°F, pH = 7.5 ± 5 and 750 ppm TDS as sodium chloride. Product water produced, amount of waste and percent rejection will vary with changes in pressure, temperature and total dissolved solids. Feed water over 10 grains of hardness may affect performance of the filtration system.

GXRQ18NBN (Impurities Reduced)

Chlorine Taste and Odor, Particulates (Sediment)
Ammonium
Asbestos
Arsenic
Barium
Bicarbonate
Bromide
Cadmium
Chloride
Chromium (hexavalent)
Chromium (trivalent)
Copper
Cysts
Fluoride
Lead
Magnesium
Nitrate
Nitrite
Radium 226/228
Selenium
Sodium
Sulfate
Tannin
TDS
Turbidity
Zinc
Alachlor
Atrazine
Atenolol
Benzene
Bisphenol A
Bromochloroacetonitrile (haloacetonitrile)
Bromodichloromethane (trihalomethanes)
Bromoform (trihalomethanes)
Carbamazepine
Carbofuran
Carbon Tetrachloride
Chlorobenzene
Chlorodibromomethane (trihalomethanes)
Chloroform (trihalomethanes)
Chloropicrin
cis-1,2-dichloroethylene
cis-1,3-dichloropropylene
DEET
Dibromoacetonitrile (haloacetonitrile)
Dibromochloropropane
Dichloroacetonitrile (haloacetonitrile)
Dinoseb
Endrin
Estrone
Ethylbenzene
Ethylene dibromide
Heptachlor
Heptachlor epoxide
Hexachlorobutadiene
Simazine
Styrene
TCEP
TCPP
Tetrachloroethylene
Toluene
Trans-1,2-dichloroethylene
Tribromoacetic acid
Trichloroacetonitrile (haloacetonitrile)
Trichloroethylene
Trimethoprim
Xylenes VOC Surrogate
1,1,1-trichloro-2-propanone (haloketones)
1,1,1-trichloroethane
1,1,2,2-Tetrachloroethylene
1,1,2-trichloroethane
1,1-dichloro-2-propanone (haloketones)
1,1-dichloroethylene
1,2,4-Trichlorobenzine
1,2-dichloroethane
1,2-dichloropropane
2,4,5-TP (silvex)
2,4-D
Hexachlorocyclopentadiene
Ibuprofen
Lindane
Linuron
MTBE
Meprobamate
Methoxychlor
Metolachlor
Naproxen
Nonyl phenol
o-Dichlorobenzene
p-Dichlorobenzene
PFOA
PFOS
Pentachlorophenol
Phenytoin

WHOLE HOUSE FILTERS

	GXWH50/70 REPLACEMENT FILTERS			HIGH-FLOW DROP-IN REPLACEMENT FILTERS		STANDARD-FLOW DROP-IN REPLACEMENT FILTERS			
	FTHLM	FTHTM	FTHPM	FXHTC	FXHSC	FXWTC	FXUSC	FXWPC	FXWSC
FILTER TYPE	Carbon block	Granulated carbon	Polypropylene	Granulated carbon	Pleated paper	Carbon paper	Polyspun	Pleated paper	String wound
Filter capacity (gallons)	15,000	20,000	15,000	30,000	24,000	700	16,000	16,000	16,000
Filter life	3 months	3 months	3 months	3 months	3 months	3 months	3 months	3 months	3 months
Filtration level	Premium	Advanced	Basic	Advanced	Basic	Advanced	Basic	Basic	Basic
Lead reduction	●								
Chlorine: Taste & Odor reduction	●	●		●		●			
Particulate reduction	0.5 micron	5 micron	30 micron	25 micron	30 micron	5 micron	30 to 50 micron	30 micron	30 micron
Sand reduction	●	●	●	●	●	●	●	●	●
Soil reduction	●	●	●	●	●	●	●	●	●
Silt reduction	●	●	●	●	●	●	●	●	●
Sediment reduction	●	●	●	●	●	●	●	●	●

See pages 274-276 for warranty information.

UNDER SINK FILTRATION SYSTEMS

	QUICK-REPLACE FILTER SYSTEMS			DROP-IN FILTER SYSTEMS
	GXK285JBL GNK285KBL	GXK185KBL	GXULQK	GX1S01R**
FEATURES				
Faucet	Filtration controller	Filtration controller		UNFCTFBL (purchase separately)
Filtration controller	Chrome	Chrome		
Faucet monitor	Electronic timer	Electronic timer		
Faucet mounting	Above sink	Above sink		
Filter change indicator	Red blinking flash	Red blinking flash	Magnetic filter reminder light	
Feed water pressure (psi)	35 min.–120 max.	20 min.–125 max	20 min.–100 max.	35 min.–125 max.
Feed water temperature	33°–100°F	33°–100°F	34°–100°F	34°–100°F
Filtered water flow (gpm)	1.1	0.75	2	See filter options below
FILTERS & MEMBRANE				
Quick-Replace filter design	●	●	●	
Filter	FQK2J	FQK1K	GXULQR	FXUTC, FXULC, or FXUVC
Filter cartridges	Engineered carbon blocks	Carbon block	Carbon block	Carbon block
Filter capacity	300 gallons	150 gallons	2,000 gallons	See filter options below
Filtration level	Advanced	Advanced	Advanced	See filter options below
Filter life	6 months	6 months	6 months	See filter options below
Pharmaceutical reduction	Select pharmaceuticals	Select pharmaceuticals		
VOC reduction (%)	Select VOCs	Select VOCs		See filter options below
Lead reduction (%)	99.3	99.3	99	See filter options below
Cyst reduction (%)		99.99		See filter options below
Mercury reduction (%)	96	96.2		See filter options below
Chlorine: Taste & Odor reduction (%)	97	97.2	99	See filter options below
Turbidity reduction (%)		98.1		See filter options below
Asbestos reduction (%)				See filter options below
Atrazine reduction (%)	94.5	94.5		See filter options below
Lindane reduction (%)	98.5	98.5		See filter options below
Particulate reduction (%)*	93.3	99	99.8	See filter options below
Fitting style	3/8" Push-to-connect	3/8" Push-to-connect	3/8" Push-to-connect	3/8" NPT
Water inlet valve	Push-to-connect adaptor	Push-to-connect adaptor	Compression fitting	
Under sink installation kit	●	●	●	●
APPEARANCE				
Style	1/4 turn encapsulated	1/4 turn encapsulated	1/4 turn encapsulated	Threaded open sump
Unit color	Light gray	Light gray	White	White
Filter housing	Light gray	Light gray	White	White
Mounting bracket	Horizontal or vertical	Horizontal or vertical	Horizontal or vertical	Vertical
WEIGHTS & DIMENS.				
Approx. ship. wt. (lbs.)	4.0	2.5	3.6	2.3
Overall W x H x D (in.)	7 x 12 x 4-1/2	6-3/4 x 11-1/2 x 5-1/4	8-1/4 x 14-1/2 x 4-1/2	4-3/4 x 13-1/2 x 5
POWER/RATINGS				
Faucet monitor power requirement			1 CR2032 Lithium 3v (included)	
Filtration controller power requirement	2 AA batteries (included)	2 AA batteries (included)		

Caution: Do not use with water that is microbiologically unsafe or of unknown quality, without adequate disinfection before or after the system. Systems certified for cyst reduction may be used on disinfected water that may contain filterable cysts.
*0.5-1 micron nominal.
**Filter not included.

UNDER SINK FILTERS

	DROP-IN REPLACEMENT FILTERS		
	FXUTC	FXULC	FXUVC
FEATURES			
Filtered water flow (gpm)	1	0.6	0.5
FILTERS & MEMBRANE			
Filter cartridges	Carbon block	Carbon block	Carbon block
Filter capacity	3,000 gallons	600 gallons	500 gallons
Filtration level	Basic	Advanced	Advanced
Filter life	6 months	6 months	6 months
VOC reduction (%)			99.8
Lead reduction (%)		99.3	99.3
Cyst reduction (%)		99.99	99.99
Mercury reduction (%)		96.4	96.4
Chlorine: Taste & Odor reduction (%)	97.5	97.5	97.6
Turbidity reduction (%)		97.9	98.5
Asbestos reduction (%)		99	99
Atrazine reduction (%)		90.8	
Lindane reduction (%)		99	96.8
Particulate reduction (%)*	99.3	99.7	99.9

Caution: Do not use with water that is microbiologically unsafe or of unknown quality, without adequate disinfection before or after the system. Systems certified for cyst reduction may be used on disinfected water that may contain filterable cysts.

See pages 274-276 for warranty information.

ENERGY STAR® CERTIFIED ELECTRONIC ROOM AIR CONDITIONERS

	GE						
	230 VOLT		115 VOLT				
	AHFK24AA	AHFK18AA	AHY14LZ	AHY12LZ	AHY10LZ	AHY08LZ	AHQ06LZ
ENERGY STAR® certified	Yes	Yes	Yes	Yes	Yes	Yes	No
FEATURES							
Refrigerant type	R-410A	R-410A	R-32	R-32	R-32	R-32	R-32
BTUh	23,500/22,900	18,000/17,800	14,000	12,000	10,000	8,000	6,000
Voltage	230/208	230/208	115	115	115	115	115
CEER	9.8	11.3	11.3	11.4	11.4	11.4	11.0
Amps	10.4/11.3	7.0/7.5	11.2	9.4	7.8	6	4.7
Watts	2,375/2,325	1,580/1,540	1,220	1,035	865	695	535
Plug type	Perpendicular	Tandem	Parallel	Parallel	Parallel	Parallel	Parallel
Filter reminder light	Yes	Yes	Yes	Yes	Yes	Yes	Yes
Energy Saver feature	Yes	Yes	Yes	Yes	Yes	Yes	Yes
24-hour on/off timer	Yes	Yes	Yes	Yes	Yes	Yes	Yes
Dehumidification (pints/hr.)	7.2	4.9	4.1	3.2	2.5	2.1	1.6
Fan speeds (Cool/Fan Only)	3/3	3/3	3/3	3/3	3/3	3/3	3/3
CFM (high shown) (indoor)	461/380	461/380	280/230	250/210	235/200	220/190	175-155-140
Thermostat	Electronic	Electronic	Electronic	Electronic	Electronic	Electronic	Electronic
Filter type	One-touch lift-out	One-touch lift-out	One-touch lift-out	One-touch lift-out	One-touch lift-out	One-touch lift-out	Slide-out
Chassis	Slide-out	Slide-out	Fixed	Fixed	Fixed	Fixed	Fixed
Window mounting	EZ Mount	EZ Mount	EZ Mount	EZ Mount	EZ Mount	EZ Mount	EZ Mount
Window opening height (min. in inches)	19-1/8	19-1/8	15-5/8	14-9/16	14-9/16	13-3/8	13-3/8
Window opening width (min. in inches)	30	30	26-1/8	25	25	24-1/2	21-7/8
Window opening width (max. in inches)	39	39	37-3/4	36-5/8	36-5/8	36	36
Overall dimensions (WxHxD in inches)	25-7/8 x 18-1/4 x 26-5/16	25-7/8 x 18-1/4 x 26-5/16	25-7/8 x 18-1/4 x 26-5/16	25-7/8 x 18-1/4 x 26-5/16	19 x 14-1/2 x 19-13/16	19 x 14-1/2 x 19-13/16	16-7/16 x 12-9/16 x 15
Net weight (lbs.)	127.6	118.8	72.45	66.33	58.3	49.7	38.92
Approx. shipping weight (lbs.)	147.4	138.6	80.35	75.16	66	54.2	43.56

ULTRA-QUIET ROOM AIR CONDITIONERS

	GE PROFILE™	
	PHC08LY	PHC06LY
FEATURES		
Claims & certification	AHAM, EEV, cUL, Rohs, UL	AHAM, EEV, cUL, Rohs, UL
ENERGY STAR certified	Yes	Yes
Area to cool	250-350	151-250
Cooling BTUh	6,150	8,100
Dehumidification (pts./hr.)	2.1	1.5
CEER rating	11.2	12.1
Cooling—Watts	710	490
Volts/Hertz	115/60	115/60
Plug capacity (Volts/Amps)	125/15	120/10
Cooling—rated cooling amps AHAM	6.2	4.4
Air flow volume CFM (high/med/low)	240/210/170	200
Energy Saver	Yes	Yes
Installation	EZ Mount	EZ Mount
Chassis type	Fixed	Fixed
Fan speed selections	3 Cooling, 3 Fan Only	3 Cooling, 3 Fan Only
Easy-access washable filter	Yes	Yes
Air discharge	4-way	4-way
Vent/air exchange exhaust	Top	Top
Remote control	Infrared remote control	Infrared remote control
Electronic thermostat	Yes	Yes
Auto restart	Yes	Yes
Digital time, temp display	Yes	Yes
Power cord length (ft.)	6	6
Delay timer	24-hour on/off	24-hour on/off
Check filter reminder	Yes	Yes
Sleep function	Through WiFi app	Through WiFi app
Approximate shipping weight (lbs.)	65	68
Min. | Max. window opening width (in.)	26 | 39-1/2	26-1/16 | 39-1/4
Minimum window opening height (in.)	13-3/8	13-3/8
Net weight (lbs.)	57	56
Overall dimensions (WxHxD in inches)	19 x 14-3/8 x 18-1/8	21-1/4 x 12-7/16 x 18-1/8

MECHANICAL ROOM AIR CONDITIONER

	GE
	AHV05LZ
FEATURES	
Refrigerant type	R-32
BTUh	5,050
Voltage	115
CEER	11
Amps	4.1
Watts	455
Plug type	Parallel
Dehumidification (pints/hr.)	1
Fan speeds (Cool/Fan Only)	2/2
CFM (high shown) (indoor)	135
Thermostat	Mechanical
Filter type	Slide-out
Chassis	Fixed
Window mounting	EZ Mount
Window opening height (min. in inches)	13-3/8
Window opening width (min. in inches)	21-7/8
Window opening width (max. in inches)	36
Overall dimensions (WxHxD in inches)	16-7/16 x 12-9/16 x 15
Net weight (lbs.)	35.93
Approx. shipping weight (lbs.)	41.7

WINDOW AIR CONDITIONER WARRANTY

One-year limited warranty on entire unit. In-home service. Parts and labor included. See written warranty for details.

Preliminary specifications subject to change.
While limited quantities last.

See pages 275-276 for warranty information.

HEAT/COOL SERIES

	GE							
	AEE24DT	AEE18DT	AEE12DT	AEE08AT	AHE24DZ	AHE18DZ	AHE12DZ	AHE08AZ
FEATURES								
Refrigerant type	R-410A	R-410A	R-410A	R-410A	R-410A	R-410A	R-410A	R-410A
BTU-AHAM	24,000/23,600	17,600/17,300	11,800/11,600	8,000	23,500	18,000	12,000	8,000
Voltage	230/208	230/208	230/208	115	230/208	230/208	230/208	115
CEER	9.4	10.7	10.9	10.9	9.4	10.7	10.9	10.9
Amps-AHAM	11.3/12.3	7.5/8.1	4.6/4.9	6.5	11.1/12.0	7.5/8.2	4.9/5.4	6.8
Watts input	2,550/2,510	1,860/1,820	1,190/1,170	725	2,480/2,420	1,660/1,640	1,090/1,060	725
Dehumidification (pints/hr.)	8.0	5.1	2.0	1.3	3.4	2.4	3.46	1.55
ELECTRIC RESISTANCE HEATING								
BTUh	11,000/8,700	11,000/8,700	11,000/8,700	3,800	11,000/8,500	11,000/8,500	10,700/8,700	3,700
Amps	16.0/15.6	16.0/15.6	16.0/14.6	12.0	16.0/15.0	16.0/15.0	15.5/14.5	11.9
Watts	3,700/3,070	3,630/3,020	3,550/2,870	1,420	3,670/3,090	3,670/3,090	3,135/2,549	1,084
Electronic controls	Yes	Yes	Yes	Yes	Yes	Yes	Yes	Yes
Line cord plug	Perpendicular	Perpendicular	Perpendicular	Parallel	Perpendicular	Perpendicular	Perpendicular	Parallel
Recommended circuit protection (time delay)	20 amps	20 amps	20 amps	15 amps	20 amps	20 amps	20 amps	15 amps
Fan speeds	3 Heating 3 Cooling	3 Heating 3 Cooling	3 Heating 3 Cooling	3 Heating 3 Cooling	3 Heating Only 3 Cooling 3 Fan	3 Heating Only 3 Cooling 3 Fan	3 Heating 3 Cooling 3 Fan	3 Heating 3 Cooling 3 Fan
Fan Only setting	3	3	3	3	3	3	3	3
Airflow (CFM) roomside high/low	470/400	410/360	270/240	270/240	450/360	450/360	275/230	286/240
Air exchange exhaust	Yes	Yes	Yes	Yes	Top air discharge	Top air discharge	Top air discharge	Top air discharge
Rotary compressor	Yes	Yes	Yes	Yes	Yes	Yes	Yes	Yes
Slide-out chassis	Yes	Yes	Yes	Yes	Yes	Yes	Yes	Yes
Window installation kit	EZ Mount	EZ Mount	EZ Mount	EZ Mount	EZ Mount	EZ Mount	EZ Mount	EZ Mount
Window opening height (min. in inches)	19-1/4	18-1/2	16-13/32	16-13/32	19 -1/8	19 -1/8	16-7/8	16-7/8
Window opening width (min. in inches)	30	26	27	27	30	30	27	27
Window opening width (max. in inches)	41	41	36	36	39	39	35-1/4	35-1/4
Overall dimensions (WxHxD in inches)	26-17/32 x 18-5/8 x 26-17/32	23-5/8 x 17-25/32 x 25-7/16	22-5/8 x 15-7/8 x 23-5/8	22-5/8 x 15-7/8 x 23-5/8	25-7/8 x 26-5/16 x 18-1/4	25-7/8 x 26-5/16 x 18-1/4	22-9/16 x 16 x 24-1/2	22-9/16 x 16 x 24-1/2
Net weight (lbs.)	135	117	93	80	135	117	91	80
Approx. shipping weight (lbs.)	152	128	106	93	152	128	104	93

Not intended to be a primary source of heat.

Parallel
115V
15 Amp

Tandem
230/208V
15 Amp

Perpendicular
230/208V
20 Amp

Wall outlets

All wiring, including installation of receptacle, must be made in accordance with local electrical codes and regulations. Electrical outlet should be in reach of line cord.

Note: Aluminum building wiring may pose special problems—consult a qualified electrician.

PORTABLE AIR CONDITIONERS

	GE					
	APWA14YZMW	APCA14YZMW	APSA13YZMW	APCA12YZMW	APCA10YZMW	APCA09YZMW
FEATURES						
Refrigerant type	R-410A	R-410A	R-410A	R-410A	R-410A	R-410A
BTUH (ASHRAE) (cool/heat)	13,500	13,500	13,000/10,000	12,000	10,000	8,500
BTUH (SACC) (cool/heat)	9,700	9,700	9,450	8,200	6,700	5,600
Recommended room size (sq. ft.)	550	550	550	450	350	250
Voltage	115	115	115	115	115	115
Amps (cool/heat)	12.0	12.0	12.0/11.0	10.0	8.5	7.5
Watts (cool/heat)	1,350	1,350	1,350/1,200	1,150	980	860
Line cord plug	Perpendicular	Perpendicular	Perpendicular	Perpendicular	Perpendicular	Perpendicular
24-hour on/off timer	Yes	Yes	Yes	Yes	Yes	Yes
Easy-roll casters	Yes	Yes	Yes	Yes	Yes	Yes
Dehumidification (pints/hr.)	87.0	87.0	83.0	77.0	60.0	57.0
Auto start	Yes	Yes	Yes	Yes	Yes	Yes
Fan speeds (Cool/Fan Only)	3/3	3/3	3/3/3	3/3	3/3	3/3
CFM (high shown) (indoor)	250	250	250	235	230	175
Thermostat	Thermistor	Thermistor	Thermistor	Thermistor	Thermistor	Thermistor
Filter type	Permanent mesh	Permanent mesh	Permanent mesh	Permanent mesh	Permanent mesh	Permanent mesh
Window exhaust kit	Yes	Yes	Yes	Yes	Yes	Yes
Exhaust hose length (ft.)	5	5	5	5	5	5
Installation	Window kit min/ max extension 20"/46"	Window kit min/ max extension 20"/46"	Window kit min/ max extension 20"/46"	Window kit min/ max extension 20"/46"	Window kit min/ max extension 20"/46"	Window kit min/ max extension 20"/46"
CASE DIMENSIONS						
Height (in.)	32.00	32.00	32.00	28.50	28.50	24.70
Width (in.)	18.50	18.50	18.50	17.00	17.00	15.20
Depth (in.)	15.35	15.35	15.35	14.10	14.10	14.00
Net weight (lbs.)	70.5	70.5	75.0	68.3	59.5	51.6
Approx. shipping weight (lbs.)	90.0	90.0	94.0	79.0	76.5	66.4

DEHUMIDIFIER

	GE
	APER50LZ
FEATURES	
ENERGY STAR certified	Yes
R-410A refrigerant	Yes
Dehumidification (pints/day)	49.63
Dry airflow (CFM) (high/med/low)	200/165/147
Electronic controls	Yes
Auto shut-off	Yes
Automatic defrost	Yes
Water level indicator	Yes
Fan speeds	3
Upfront removable bucket	Yes
Bucket capacity (pints)	15.0
External drain capability	Yes
Washable air filter	Yes
Easy-roll casters (4)	Yes
Voltage	115
Watts	770
Amps	7.2
Line cord plug	Perpendicular
Temperature operating range	41°F–90°F
Overall dimensions (WxHxD in inches)	14.76 x 24.02 x 11.38
Shipping weight (lbs.)	48.5
Net weight (lbs.)	43.7

See written warranty for details.

DEHUMIDIFIER WARRANTY

One-year limited product replacement warranty. See written warranty for details.

See pages 275-276 for warranty information.

24" UNIVERSAL FIT ROOM AIR CONDITIONERS

	GE								
	COOL ONLY						HEAT/COOL		
	AKCQ08ACH	AKCQ10ACH	AKCQ12ACH	AKCQ10DCH	AKCQ12DCH	AKCQ14DCH	AKEQ10DCH	AKEQ12DCH	AKEQ14DCH
Voltage—frequency (Hz)	115 - 60	115 - 60	115 - 60	230/208 - 60	230/208 - 60	230/208 - 60	230/208 - 60	230/208 - 60	230/208 - 60
COOLING CAPACITY									
BTUH—AHAM	8,550	10,000	12,000	10,200/9,900	12,100/11,750	14,000/14,000	10,000/9,800	12,000/11,600	14,000/13,600
Amps—AHAM	7.1	8.3	10.0	4.5/4.8	5.2/5.6	6.9/7.5	4.6/5.0	5.5/5.9	6.9/7.5
EER	10.6	10.6	10.5	10.6/10.6	10.5/10.5	9.3	9.6/9.6	9.5/9.5	9.3/9.5
CEER	10.6	10.6	10.5	10.6/10.6	10.5/10.5	9.3	9.6/9.6	9.5/9.5	9.3/9.5
ENERGY STAR® certified	Yes	Yes	Yes	Yes	Yes	No	No	No	No
Dehumidification (pints/hr.)	2.5	3.0	3.6	3.0	3.6	3.6	3.0	3.6	3.6
FEATURES									
Refrigerant type/capacity	R-410A 17.64 oz.	R-410A 20.81 oz.	R-410A 21.87 oz.	R-410A 20.81 oz.	R-410A 21.87 oz.	R-410A 21.52 oz.	R-410A 17.99 oz	R-410A 21.87 oz.	R-410A 21.52 oz.
Resistance heat BTU							10,600/8,600	10,600/8,600	10,600/8,600
Resistance heat Amp							15/13.5	15/13.5	15/13.5
Resistance heat Watts							3,450/2,821	3,450/2,821	3,450/2,821
Fan speeds	3	3	3	3	3	3	3	3	3
Air flow volume (CFM)									
High	252	269	286	275	277	295	292	286	282
Med	217	234	258	240	258	275	275	264	263
Low	189	203	235	209	235	252	252	240	244
Compressor type	Rotary	Rotary	Rotary	Rotary	Rotary	Rotary	Rotary	Rotary	Rotary
Plug capacity (15A circuit size)	125V/120V/15A	125V/120V/15A	125V/120V/15A	240V/250V/15A	240V/250V/15A	240V/250V/15A	240V/20A	240V/20A	240V/20A
Line cord plug/configuration	A / 5-15P	A / 5-15P	A / 5-15P	B / 6-15P	B / 6-15P	B / 6-15P	6-20P	6-20P	6-20P
On/Off timer (24 hour)	Yes	Yes	Yes	Yes	Yes	Yes	Yes	Yes	Yes
Energy saver (Eco Mode)	Yes	Yes	Yes	Yes	Yes	Yes	Yes	Yes	Yes
Auto Fan	Yes	Yes	Yes	Yes	Yes	Yes	Yes	Yes	Yes
Dehumidify function	Yes	Yes	Yes	Yes	Yes	Yes	Yes	Yes	Yes
Sleep mode	Yes	Yes	Yes	Yes	Yes	Yes	Yes	Yes	Yes
Wall sleeve (sold separately)—RAB24, RAB26*, RAB46*, RAB48*	Optional, not included	Optional, not included	Optional, not included	Optional, not included	Optional, not included	Optional, not included	Optional, not included	Optional, not included	Optional, not included
Installation	Wall	Wall	Wall	Wall	Wall	Wall	Wall	Wall	Wall
Wall case required	Yes	Yes	Yes	Yes	Yes	Yes	Yes	Yes	Yes
WEIGHTS & DIMENSIONS									
Width (in.)	24-4/19	24-4/19	24-4/19	24-4/19	24-4/19	24-4/19	24-4/19	24-4/19	24-4/19
Height (in.)	14-9/17	14-9/17	14-9/17	14-9/17	14-9/17	14-9/17	14-9/17	14-9/17	14-9/17
Depth (in.)	19	19	19	19	19	19	19	19	19
Net weight (lbs.)	66	69	77	69	76	77	69	79	80
Approx. shipping weight (lbs.)	77	81	88	81	87	89	80	90	91

*Must use provided trim kit.

BUILT-IN "J" SERIES—WIFI HEAT/COOL

	GE				
	STANDARD INSTALLATION				HIGH-MOUNT
	AJEQ08AWH	AJEQ10DWH	AJEQ12DWH	AJEQ14DWH	AJEM12DWH
ADA compliant	Yes	Yes	Yes	Yes	Yes
Voltage/hertz/phase	115/60/1	230/208/60/1	230/208/60/1	230/208/60/1	230/208/60/1
COOLING CAPACITY					
BTUH—AHAM cooling	8,300	10,000/9,800	12,000/11,700	14,000/13,600	12,000/11,700
Amps—AHAM	7.8	4.6/5.0	5.5/5.9	6.9/7.5	5.5/5.9
Watts	840	1,020/1,000	1,240/1,210	1,480/1,410	1,240/1,210
EER	9.6	9.6/9.6	9.5/9.5	9.3/9.5	9.5/9.5
CEER	9.6	9.6/9.6	9.5/9.5	9.3/9.5	9.5/9.5
Dehumidification (pints/hr.)	1.9	2.7/2.7	3.4/3.4	3.8/3.8	3.8/3.8
BTU heating	4,200	10,600/8,600	10,600/8,600	10,600/8,600	10,600/8,600
Heating Amps	11.8	15/13.5	15/13.5	15/13.5	15/13.5
Heating Watts	1,320	3,450/2,821	3,450/2,821	3,450/2,821	3,450/2,821
FEATURES					
WiFi	Yes	Yes	Yes	Yes	Yes
Refrigerant type	R-410A	R-410A	R-410A	R-410A	R-410A
Electronic control	Yes	Yes	Yes	Yes	Yes
Remote control	Yes	Yes	Yes	Yes	Yes
24VAC wall thermostat capable (RAK164D2, RAK164P2)—8 Pin Quick Disconnect	Yes	Yes	Yes	Yes	Yes
Line cord plug/configuration	Parallel/NEMA 5-15P Right angle LCDI	Perpendicular NEMA 6-20P Right angle LCDI	Perpendicular NEMA 6-20P Right angle LCDI	Perpendicular NEMA 6-20P Right angle LCDI	Perpendicular NEMA 6-20P Right angle LCDI
Fan speeds	3	3	3	3	3
Centered rear condenser coil—compatible with RAG13/ RAG13A/RAG14E grille	Yes	Yes	Yes	Yes	Yes
WEIGHTS & DIMENSIONS					
Chassis width (in.)	26-1/16	26-1/16	26-1/16	26-1/16	26-1/16
Chassis height (in.)	15-21/32	15-21/32	15-21/32	15-21/32	15-21/32
Chassis depth (in.)	21-1/16	21-1/16	21-1/16	21-1/16	21-1/16
Approx. net weight (lbs.)	66	69	79	79	79
Approx. shipping weight (lbs.)	76	80	89	89	89

All 230/208V cooling units with electric heat models are corrosion treated. Design subject to change without notice.
Specifications subject to change. For complete specifications visit geappliances.com.

AIR CONDITIONER TIPS

Air flow—Keep air filters clean. Do not block air flow areas.

Roomside view—J-models feature concealed power cord storage. This eliminates excessive cord exposure when receptacle is located close to unit.

ACCESSORIES

Other accessories available.

See page 276 for warranty information.

BUILT-IN "J" SERIES—WIFI COOL ONLY

	GE						
	STANDARD INSTALLATION						
	AJCQ06LWH	AJCQ08AWH	AJCQ10AWH	AJCQ12AWH	AJCQ10DWH	AJCQ12DWH	AJCQ14DWH
ENERGY STAR certified	Yes	Yes	Yes	Yes	Yes	Yes	Yes
ADA compliant	Yes	Yes	Yes	Yes	Yes	Yes	Yes
Voltage/hertz/phase	115/60/1	115/60/1	115/60/1	115/60/1	230/208/60/1	230/208/60/1	230/208/60/1
COOLING CAPACITY							
BTU—AHAM cooling	6,300	8,400	10,000	12,000	10,150/9,900	12,000/11,700	14,000/13,500
Amps—AHAM	5.0	7.0	8.3	10.2	4.5/4.8	5.2/5.6	6.9/7.5
Watts	560	780	930	1,130	950/920	1,140/1,120	1,490/1,420
EER	11.0	10.6	10.6	10.5	10.6/10.6	10.5/10.5	9.3/9.5
CEER	11.0	10.6	10.6	10.5	10.6/10.6	10.5/10.5	9.3/9.5
Dehumidification (pints/hr.)	1.3	1.9	2.7	3.4	2.7/2.7	3.4/3.4	3.8/3.8
FEATURES							
WiFi	Yes	Yes	Yes	Yes	Yes	Yes	Yes
Refrigerant type	R-410A	R-410A	R-410A	R-410A	R-410A	R-410A	R-410A
Circuit size (Amps.)	15	15	15	15	15	15	15
Line cord plug/configuration	Parallel/NEMA 5-15P Right Angle LCDI	Parallel/NEMA 5-15P Right Angle LCDI	Parallel/NEMA 5-15P Right Angle LCDI	Parallel/NEMA 5-15P Right Angle LCDI	Tandem/NEMA 6-15P Right Angle LCDI	Tandem/NEMA 6-15P Right Angle LCDI	Tandem/NEMA 6-15P Right Angle LCDI
Electronic control	Yes	Yes	Yes	Yes	Yes	Yes	Yes
Filter reminder function	Yes	Yes	Yes	Yes	Yes	Yes	Yes
Filter type	Rigid, tilt out/washable	Rigid, tilt out/washable	Rigid, tilt out/washable	Rigid, tilt out/washable	Rigid, tilt out/washable	Rigid, tilt out/washable	Rigid, tilt out/washable
Remote	Yes	Yes	Yes	Yes	Yes	Yes	Yes
Fan speeds	3	3	3	3	3	3	3
WEIGHTS & DIMENSIONS							
Chassis WxHxD (in.)	← 26-1/16 x 15-21/32 x 21-1/16 →						
Approx. net weight (lbs.)	62	64	67	73	67	74	74
Approx. shipping weight (lbs.)	72	73	77	83	77	84	84

	GE			
	HIGH-MOUNT INSTALLATION			
	AJCM08AWH	AJCM10AWH	AJCM10DWH	AJCM12DWH
ENERGY STAR certified	Yes	Yes	Yes	Yes
ADA/UFAS compliant	Yes	Yes	Yes	Yes
Voltage/hertz/phase	115/60/1	115/60/1	230/208/60/1	230/208/60/1
COOLING CAPACITY				
BTU—AHAM cooling	8,400	10,000	10,150/9,900	12,000/11,700
Amps—AHAM	7	8.3	4.5/4.8	5.2/5.6
Watts	790	930	950/920	1,140/1,120
EER	10.6	10.6	10.6/10.6	10.5/10.5
CEER	10.6	10.6	10.6/10.6	10.5/10.5
Dehumidification (pints/hr.)	1.9	2.7	2.7/2.7	3.4/3.4
FEATURES				
WiFi	Yes	Yes	Yes	Yes
Refrigerant type	R-410A	R-410A	R-410A	R-410A
Circuit size (Amps.)	15	15	15	15
Line cord plug/configuration	Parallel/NEMA 5-15P Right Angle LCDI	Parallel/NEMA 5-15P Right Angle LCDI	Tandem/NEMA 6-15P Right Angle LCDI	Tandem/NEMA 6-15P Right Angle LCDI
Electronic control	Yes	Yes	Yes	Yes
Filter reminder function	Yes	Yes	Yes	Yes
Filter type	Rigid, tilt out/washable	Rigid, tilt out/washable	Rigid, tilt out/washable	Rigid, tilt out/washable
Remote	Yes	Yes	Yes	Yes
Fan speeds	3	3	3	3
WEIGHTS & DIMENSIONS				
Chassis WxHxD (in.)	← 26-1/16 x 15-21/32 x 21-1/16 →			
Approx. net weight (lbs.)	64	67	67	74
Approx. shipping weight (lbs.)	73	77	77	84

BUILT-IN "J" SERIES—WIFI HEAT PUMP HEAT/COOL

	GE	
	HEAT PUMP	
	AJHQ08AWH	AJHQ12DWH
ADA compliant	Yes	Yes
Voltage/hertz/phase	115/60/1	230-208/60/1
COOLING CAPACITY		
BTUH cooling	8,200	11,500/11,100
Amps	7.3	5.2/5.5
Watts	810	1,170/1,130
EER	9.8	9.6/9.6
CEER	9.8	9.6/9.6
Dehumidification (pints/hr.)	1.9	3.4/3.4
FEATURES		
WiFi	Yes	Yes
Refrigerant type	R-410A	R-410A
Reverse cycle BTU heating	6,650	8,500/8,300
Reverse cycle Amps	6.0	4.6/5.0
Reverse cycle Watts	650	1,030/1,010
COP*	3.0	2.4
Resistance heat BTU	4,200	10,600/8,600
Resistance heat Amps (max)	11.8	15.0/13.5
Resistance heat Watts	1,320	3,450/2,821
24VAC wall thermostat capable requires 8 pin thermostat converter (sold separately)	Yes	Yes
Line cord plug/configuration	Parallel/Right Angle LCDI	Perpendicular/Right Angle LCDI
Fan speeds	3	3
WEIGHTS & DIMENSIONS		
Chassis WxHxD (in.)	← 26-1/16 x 15-21/32 x 21-1/16 →	
Approx. net weight (lbs.)	72	82
Approx. shipping weight (lbs.)	83	92

*Coefficient of Performance

Listed by Underwriters Laboratories

See page 276 for warranty information.

BUILT-IN ROOM AIR CONDITIONERS WALL OPENING
FOR RAB26/RAB46B QUICK SNAP CASES

A finished opening of 26-1/8" x 15-3/4", clear of intrusions, is required. Keep clearance of 4" from side walls. Brick veneer or frame walls should have wood studding surrounding case to provide firm anchoring with screws. Case can be fastened directly to brick or block walls with screws sunk in lead expansion shields.

Note: Units should be caulked on all four sides of case to the building exterior to assure building integrity.

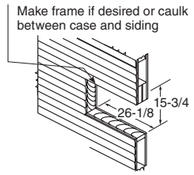

Frame Construction

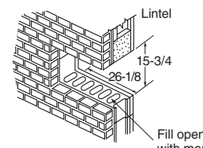

Brick Block and Brick Frame Construction

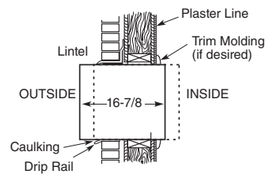

Flexible Mounting Position

STANDARD WALL CASE RAB46A

RAB26A—Color-matched white sleeve to current AJ product. 4-piece quick snap universal design. Aluminum grille (RAG13A) included. Uses RAD10 drain kit.

RAB46B—Beige-colored Quick Snap Flat Pack Wall Sleeve

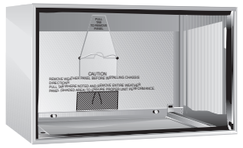

RAK26TO—26" Sleeve Tenant Option
Used when the air conditioner is offered as a tenant option. Install when the wall sleeve is installed without a chassis to close off the interior from the outside elements. Includes indoor steel insulated panel, vinyl outdoor panel and hardware.

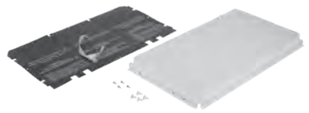

WALL OUTLETS

All wiring, including installation of receptacle, must be made in accordance with local electrical codes and regulations. Electrical outlet should be in reach of line cord.

Note: Aluminum wiring may pose special problems—consult a qualified electrician.

Note: Some models may not be available in your area due to local legislation. Contact your local dealer.


Parallel
115V
15 Amp


Perpendicular
230/208V
20 Amp


Tandem
230/208V
15 Amp

GE SINGLE PACKAGED VERTICAL UNIT AIR CONDITIONER

	GE AZ95 SERIES		
	COOLING WITH ELECTRIC HEAT		
	AZ95E09DAC	AZ95E12DAC	AZ95E18DAC
Voltage	230/208	230/208	230/208
CASE DIMENSIONS			
Cooling BTUH	9,200	11,500	17,200
EER (minimum)	11.5	12.1	11.2
Cooling power (Watts)	795	940	1,520
Cooling current (Amps)	3.6	4.3	7.3
Sensible heat ratio (SHR)	74%	73%	70%**
Dehumidification (pints per hour)	2.9	2.8	4.7**
Refrigerant	R-410A	R-410A	R-410A
Indoor CFM (hi/lo) (0.1 ESP)	408/305	408/356	468/408
CASE DIMENSIONS			
Width (in.)	23-5/8	23-5/8	23-5/8
Depth (in.)	24-1/8	24-1/8	24-1/8
Height (in.)	31-7/8	31-7/8	31-7/8
Net weight (lbs.)	119	127	141
Approx. shipping weight (lbs.)	132	140	154
Clearances for front install (min.)	3" on all sides	3" on all sides	3" on all sides
Clearances for side install (min.)	5" on front/3" on sides	5" on front/3" on sides	5" on front/3" on sides

	GE AZ95 SERIES					
	HEAT PUMP WITH BACKUP ELECTRIC HEAT			HEAT PUMP WITH BACKUP ELECTRIC HEAT		
	AZ95H09DAC	AZ95H12DAC	AZ95H18DAC	AZ95H09EAC	AZ95H12EAC	AZ95H18EAC
Voltage	230/208	230/208	230/208	265	265	265
FEATURES						
Cooling BTUH	8,900	11,300	17,000	8,700	11,400	17,100
EER (minimum)	11.1	11.8	11.1	11	11	11
Cooling power (Watts)	800	955	1,525	775	925	1,560
Cooling current (Amps)	3.7	4.5	7.1	3	4	6.3
Sensible heat ratio (SHR)	76%	75%	71%**	75%	76%	75%**
Dehumidification (pints per hour)	1.9	2.5	4.4**	1.9	2.5	4.4**
Refrigerant	R-410A	R-410A	R-410A	R-410A	R-410A	R-410A
Indoor CFM (hi/lo) (0.1 ESP)	408/305	417/376	468/408	408/305	417/376	468/408
HEAT PUMP						
Heating BTU	8,500	10,500	15,800	8,000	10,500	15,900
COP (Min.)	3.3	3.5	3.3	3.3	3.5	3.3
Heating power (Watts)	735	870	1,400	660	865	1,435
Heating current (Amps)	3.5	4.3	6.6	2.8	3.7	5.9
CASE DIMENSIONS						
Width (in.)	23-5/8	23-5/8	23-5/8	23-5/8	23-5/8	23-5/8
Depth (in.)	24-1/8	24-1/8	24-1/8	24-1/8	24-1/8	24-1/8
Height (in.)	31-7/8	31-7/8	31-7/8	31-7/8	31-7/8	31-7/8
Net weight (lbs.)	122	128	142	122	128	142
Approx. shipping weight (lbs.)	135	141	155	135	141	155
Clearances for front install (min.)	3" on all sides	3" on all sides	3" on all sides	3" on all sides	3" on all sides	3" on all sides
Clearances for side install (min.)	5" on front/3" on sides	5" on front/3" on sides	5" on front/3" on sides	5" on front/3" on sides	5" on front/3" on sides	5" on front/3" on sides

*230V Performance Data Listed
**18K Dehum Rate and SHR data acquired using medium fan speed. All other models show low fan speed data.

See page 276 for warranty information.
Above illustrations intended for dimensional reference only. Refer to photography for actual product appearance.

ZONELINE® PACKAGED TERMINAL AIR CONDITIONER SPECIFICATIONS

AZ45 SERIES TYPICAL COOLING WITH ELECTRIC HEAT

	230/208V Models			
	AZ45E07DAB	AZ45E09DAB	AZ45E12DAB	AZ45E15DAB
CAPACITY				
Cooling BTUH	7,200/7,000	9,700/9,600	11,600/11,500	14200/14100
EER (BTU/Watt)	13.4/13.4	12.1/12.1	11.7/11.8	10.5/10.5
Dehumidification (pints/hr.)	1.64	2.7	3.5	4.6
FEATURES				
Refrigerant type	R-410A	R-410A	R-410A	R-410A
CFM, indoor fan high	350	390	420	435
CFM, indoor fan low	220	260	290	330
Vent CFM (full open*)	33	38	38	47
POWER/RATINGS				
Power factor	96%	98%	98%	97%
Sensible heat ratio	72%	64%	62%	63%
Cooling Watts	535/520	800/790	960/900	1,350/1,320
Cooling Amperes, F.L.	2.5/2.6	3.6/3.9	4.7/5.0	6.4/6.8
Amperes, L.R.	13.5	21.0	29.5	31.5
WEIGHT (NET/SHIP)	90/100	103/113	106/116	106/116

AZ45 SERIES COOLING WITH ELECTRIC HEAT (Premium Guard Corrosion Protection)

	230/208V Models				265V Models			
	AZ45E07DAC	AZ45E09DAC	AZ45E12DAC	AZ45E15DAC	AZ45E07EAC	AZ45E09EAC	AZ45E12EAC	AZ45E15EAC
CAPACITY								
Cooling BTUH	7,200/7,000	9,400/9,300	11,600/11,500	14,600/14,500	7,100	9,500	11,500	14,700
EER (BTU/Watt)	13.4/13.4	11.8/11.8	11.7/11.8	10.3/10.4	13.2	11.6	11.7	10.5
Dehumidification (pints/hr.)	1.64	2.7	3.5	4.6	1.64	2.7	3.5	4.6
FEATURES								
Refrigerant type	R-410A	R-410A	R-410A	R-410A	R-410A	R-410A	R-410A	R-410A
CFM, indoor fan high	350	390	420	435	348	393	420	435
CFM, indoor fan low	220	260	290	330	223	260	290	330
Vent CFM (full open*)	33	38	38	47	33	38	38	47
POWER/RATINGS								
Power factor	96%	98%	98%	97%	95%	94%	97%	97%
Sensible heat ratio	72%	64%	62%	63%	72%	67%	62%	63%
Cooling Watts	535/520	795/790	985/955	1,390/1,380	540	815	990	1,390
Cooling Amperes, F.L.	2.5/2.6	3.5/3.9	4.4/4.7	6.3/6.7	2.2	3.3	4.0	5.5
Amperes, L.R.	13.5	21	29.5	31.5	11.7	16.5	23.5	29.0
WEIGHT (NET/SHIP)	90/100	103/113	106/116	106/116	95/105	103/113	106/116	107/117

AZ45 SERIES COOLING WITH ELECTRIC HEAT (Dry Air 25)

	230/208V Models			265V Models	
	AZ45E07DAP	AZ45E09DAP	AZ45E12DAP	AZ45E09EAP	AZ45E12EAP
CAPACITY					
Cooling BTUH	6,900/6,800	9,400/9,300	11,200/11,000	9,400	10,900
EER (BTU/Watt)	12.8/12.8	12.1/12.1	11.4/11.5	12.1	11.0
Dehumidification (pints/hr.)	2.4	3.4	4.2	3.5	4.2
FEATURES					
Refrigerant type	R-410A	R-410A	R-410A	R-410A	R-410A
CFM, indoor fan high	350	370	360	370	360
CFM, indoor fan low	220	260	270	260	270
Vent CFM (full open)	40	44	44	44	44
POWER/RATINGS					
Power factor	96%	97%	98%	93%	97%
Sensible heat ratio	59%	58%	54%	58%	54%
Cooling Watts	535/530	775/765	970/960	780	995
Cooling Amperes, F.L.	2.5/2.7	3.5/3.8	4.4/4.7	3.2	3.9
Heating Amperes	13.5	21.0	29.5	16.5	23.5
WEIGHT (NET/SHIP)	96/106	109/119	112/122	109/119	112/122

Listed by Underwriters Laboratories

Specifications subject to change.
See page 276 for warranty information.

ZONELINE® PACKAGED TERMINAL AIR CONDITIONER SPECIFICATIONS

AZ65 SERIES HEAT PUMP WITH BACKUP ELECTRIC HEAT

	230/208V Models			
	AZ65H07DAB	AZ65H09DAB	AZ65H12DAB	AZ65H15DAB
CAPACITY				
Cooling BTUH	7,100/6,900	9,700/9,600	11,900/11,800	14,400/14,200
EER (BTU/Watt)	13.0/13.0	12.2/12.2	11.6/11.8	10.5.10.5
Dehumidification Pts/Hr	1.7	2.6	3.7	4.8
FEATURES				
Refrigerant type	R-410A	R-410A	R-410A	R-410A
CFM, indoor fan high	360	420	410	400
CFM, indoor fan low	205	300	300	290
Vent CFM (full open*)	38	40	45	44
POWER/RATINGS				
Power factor	96%	98%	98%	97%
Sensible heat ratio	79%	68%	62%	60%
Cooling Watts	545/530	795/785	1,020/995	1,365/1,340
Cooling Amperes, F.L.	2.5/2.7	3.6/3.8	4.6/4.9	6.2/6.6
Amperes, L.R.	13.5	21.0	29.5	31.5
Reverse cycle heat BTUH	6,200/6,100	8,100/8,000	10,400/10,300	13,500/13,300
COP**	4.0/4.0	3.7/3.7	3.6/3.6	3.2/3.2
Heating Watts	450/440	645/630	845/835	1,195/1,160
Heating Amperes	2.1/2.2	3.0/3.2	3.8/4.0	5.4/5.7
WEIGHT (NET/SHIP)	98/108	104/114	104/114	107/117

*With RAKVENT1 Kit **Coefficient of Performance

Listed by Underwriters Laboratories

AZ65 (TYPICAL) SERIES HEAT PUMP WITH BACKUP ELECTRIC HEAT (Premium Guard Corrosion Protection)

	230/208V Models				265V Models			
	AZ65H07DAC	AZ65H09DAC	AZ65H12DAC	AZ65H15DAC	AZ65H07EAC	AZ65H09EAC	AZ65H12EAC	AZ65H15EAC
CAPACITY								
Cooling BTUH	7,100/7,000	9,600/9,500	11,800/11,600	14,400/14,200	7,000	9,500	11,500	14,200
EER (BTU/Watt)	13.0/13.0	12.2/12.2	11.8/11.8	10.4/10.4	12.8	11.7	11.2	10.2
Dehumidification (pints/hr.)	1.6	2.6	3.7	4.8	1.5	2.5	3.7	4.8
FEATURES								
Refrigerant type	R-410A	R-410A	R-410A	R-410A	R-410A	R-410A	R-410A	R-410A
CFM, indoor fan high	360	420	410	400	360	420	410	400
CFM, indoor fan low	205	300	300	290	205	300	300	290
Vent CFM (full open*)	38	40	45	44	38	40	45	44
POWER/RATINGS								
Power factor	96%	98%	98%	97%	95%	94%	97%	97%
Sensible heat ratio	73%	68%	62%	60%	77%	68%	62%	60%
Cooling Watts	545/535	795/785	995/975	1,365/1,365	545	810	1,025	1,390
Cooling Amperes, F.L.	2.5/2.7	3.6/3.9	4.5/4.9	6.2/6.7	2.2	3.3	4.0	5.5
Amperes, L.R.	13.5	21.0	29.5	31.5	11.7	16.5	23.5	29.0
Reverse cycle heat BTUH	6,200/6,100	8,100/8,000	10,300/10,200	13,200/13,000	6,200	8,100	10,000	13,400
COP**	4.0/4.0	3.7/3.7	3.6/3.6	3.2/3.2	3.9	3.6	3.5	3.2
Heating Watts	450/445	645/630	835/815	1,205/1,180	460	655	835	1,225
Heating Amperes	2.1/2.2	2.9/3.1	3.8/4.0	5.5/5.8	1.9	2.8	3.5	4.9
WEIGHT (NET/SHIP)	98/108	106/116	104/114	108/118	98/108	104/114	104/114	109/119

*With RAKVENT1 Kit **Coefficient of Performance

AZ65 SERIES HEAT PUMP WITH BACKUP ELECTRIC HEAT (Internal Condensate Removal)

	230/208V Models				265V Models			
	AZ65H07DAD	AZ65H09DAD	AZ65H12DAD	AZ65H15DAD	AZ65H07EAD	AZ65H09EAD	AZ65H12EAD	AZ65H15EAD
CAPACITY								
Cooling BTUH	7,000/6,900	9,600/9,500	11,800/11,600	14,100/14,100	7,000	9,500	11,600	14,200
EER (BTU/Watt)	13.0/13.0	12.0/12.0	11.8/11.8	10.3/10.3	12.8	11.7	11.4	10.3
Dehumidification (pints/hr.)	1.6	2.6	3.7	4.8	1.5	2.5	3.7	4.8
FEATURES								
Refrigerant type	R-410A	R-410A	R-410A	R-410A	R-410A	R-410A	R-410A	R-410A
CFM, indoor fan high	360	420	410	400	360	420	410	400
CFM, indoor fan low	205	300	300	290	205	300	300	290
Vent CFM (full open*)	38.0	40.0	45.0	44.0	38	40	45	44
POWER/RATINGS								
Power factor	96%	98%	98%	97%	95%	94%	97%	97%
Sensible heat ratio	73%	68%	62%	60%	77%	68%	62%	60%
Cooling Watts	535/530	800/790	1,020/1,005	1,385/1,360	545	810	1,015	1,375
Cooling Amperes, F.L.	2.5/2.7	3.6/3.9	4.5/4.9	6.1/6.6	2.2	3.3	4.1	5.5
Amperes, L.R.	13.5	21.0	29.5	31.5	11.7	16.5	23.5	29.0
Reverse cycle heat BTUH	6,200/6,000	8,200/8,000	10,400/10,200	13,200/13,000	6,200	8,100	10,000	13,300
COP**	4.0/4.0	3.6/3.6	3.5/3.5	3.2/3.2	3.9	3.5	3.4	3.2
Heating Watts	450/435	665/650	870/850	1,235/1,225	460	670	850	1,210
Heating Amperes	2.1/2.2	3.0/3.2	3.8/4.0	5.3/5.6	1.9	2.8	3.5	4.9
WEIGHT (NET/SHIP)	100/110	108/118	106/116	110/120	100/110	106/116	106/116	111/121

*With RAKVENT1 Kit **Coefficient of Performance

See page 276 for warranty information and backup electric heat information.

ZONELINE PACKAGED TERMINAL AIR CONDITIONER SPECIFICATIONS

AZ45 SERIES COOLING WITH ELECTRIC HEAT (Makeup Air)

	230/208V Models	
	AZ45E09DBM	AZ45E12DBM
CAPACITY		
Cooling BTUH	9,100/9,100	11,700/11,500
EER (BTU/Watt)	11.5/11.5	11.6/11.6
Dehumidification Pts/Hr	2.4	3.9
FEATURES		
Refrigerant type	R-410A	R-410A
CFM, indoor fan high	409	449
CFM, indoor fan low	280	270
Vent CFM (full open*)	35	35
POWER/RATINGS		
Power factor	98%	98%
Sensible heat ratio @ 230 Volts	75%	66%
Cooling Watts	790/790	1,005/985
Total Cooling Amperes	5.1/5.2	4.5/4.9
Amperes, L.R.	21.0	29.5
WEIGHT (NET/SHIP)	122/132	123/133

AZ65 SERIES HEAT PUMP WITH BACKUP ELECTRIC HEAT (Makeup Air)

	230/208V Models				265V Models		
230/208V Models	AZ65H07DBM	AZ65H09DBM	AZ65H12DBM	AZ65H15DBM	AZ65H07EBM	AZ65H09EBM	AZ65H12EBM
CAPACITY							
Cooling BTUH	7,000/7,000	9,200/9,100	11,500/11,400	14,000/13,800	6,900	9,200	11,600
EER (BTU/Watt)	12.5/12.5	11.3/11.3	11.2/11.2	10.1/10.1	12.5	11.5	11.3
Dehumidification Pts/Hr	0.9	1.9	3.4		0.7	2	3.7
FEATURES							
Refrigerant type	R-410A	R-410A	R-410A	R-410A	R-410A	R-410A	R-410A
CFM, indoor fan high	409	409	449	400	409	409	449
CFM, indoor fan low	250	300	300	290	250	300	300
Vent CFM (full open*)	25-50	25-50	25-50	25-50	25-50	25-50	25-50
POWER/RATINGS							
Power factor	96%	97%	97%	97%	93%	93%	96%
Sensible heat ratio	89%	80%	69%		88%	78%	69%
Cooling Watts	560/560	810/805	1,025/1,015	1,370/1,350	550	800	1,025
Total Cooling Amperes	3.7/3.9	4.9/5.2	5.8/6.2	6.2/6.6	3.2	4.2	4.0
Amperes, L.R.	13.5	21	29.5	31.5	11.7	16.5	23.5
Reverse cycle heat BTUH	6,200/6,100	8,000/7,900	10,200/10,000	13,200/13,000	6,000	8,100	10,000
COP**	4.0/4.0	3.3/3.3	3.5/3.5	3.2/3.2	3.9	3.6	3.4
Heating Watts	450/440	705/695	850/835	1,200/1,180	450	655	860
Total Heating Amperes	3.3/3.4	4.7/4.8	5.0/5.2	5.4/5.7	2.9	3.8	3.5
WEIGHT (NET/SHIP)	117/127	123/133	123/133	126/136	117/127	123/133	123/133

**Coefficient of Performance

ZONELINE SPECIFICATIONS
POWER CONNECTION KITS AND HEATER WATTAGE

Power connection kits are required on all Zoneline chassis.
(See chart on page 384.)

The correct kit for the installation is determined by the voltage and amperage of the electrical circuit and the means of connecting the unit to the building wiring. If the unit is to be plugged in to a receptacle, a line cord kit would be used; if the unit is to be permanently connected, a permanent connection kit would be used. Cord set units of 265 volts must be installed in compliance with National Electrical Code®.

POWER CONNECTION KITS
Required on all models. See specification sheet for heater KW and branch circuit ampacity.

LINE CORD CONNECTION KITS



230/208 Volt Line Cord Connection Kits RAK315P, RAK320P, RAK330P

265 Volt Permanent Connection Kits
RAK515P, RAK520P, RAK530P.
Short power cord without LCDI for sub-base use only.

DIRECT CONNECTION KITS



230/208 Volt Direct Connection Kits
RAK315D, RAK320D, RAK330D

265 Volt Direct Connection Kits
RAK515D, RAK520D, RAK530D

RECEPTACLES/SUB-BASES



TANDEM
230/208V 15 amp
NEMA6-15R



265V 15 AMP
NEMA7-15R;
Receptacle used on 265V sub-base



PERPENDICULAR
230/208V 20 amp
NEMA6-20R



265V 20 AMP
NEMA7-20R;
Receptacle used on 265V sub-base



LARGE TANDEM
230/208V 30 amp
NEMA6-30R



265V 30 AMP
NEMA7-30R;
Receptacle used on 265V sub-base



RAK204D15C
15 amp sub-base
230/208 volt
Includes power cord: RAK315SP



RAK204E15C
15 amp sub-base
265 volt
Includes short power cord: RAK515P



RAK204D20C
20 amp sub-base
230/208 volt
Includes power cord: RAK320SP



RAK204E20C
20 amp sub-base
265 volt
Includes short power cord: RAK520P



RAK204D30C
30 amp sub-base
230/208 volt
Includes power cord: RAK330SP



RAK204E30C
30 amp sub-base
265 volt
Includes short power cord: RAK530P

See page 276 for warranty information.

ZONELINE® INSTALLATION

Simple three-step installation

Zoneline units are designed for easy installation, off or flush with the floor. When the sleeve is installed, the chassis simply slides into place.

Compatibility with existing Zoneline wall sleeves and rear grilles simplifies retrofit installations. A new chassis simply slides into the already installed wall case; the existing rear grille may be used as is, or with a minor modification for greater operating efficiency.

The exclusive Quick Connect power supply kit with all models makes it easy to connect the new unit to power sources already in place.

1. **Frame the opening.** The RAB77B SMC wall sleeve requires an opening of 16-1/2" high x 42-3/8" wide, while the RAB81 or RAB81B wall sleeve requires an opening of 16-1/4" high x 42-1/4" wide. Position the sleeve, secure it to the studs and then caulk. Complete instructions are furnished with each unit.
2. **Connect the electrical supply.** Each Zoneline unit requires a 230/208V or 265V power supply. It is strongly recommended that electrical connections be made by a qualified electrician. All wiring, including installation of the receptacle, must be in accordance with local codes.
3. **Slide-in chassis.** With the wall sleeve, electrical receptacle and exterior grille in place, the separate chassis simply slides into position. Install the roomside cabinet, and plug into the electrical receptacle. You are now ready for many years of quiet comfort.

ELECTRICAL WIRING
All wiring, including installation of receptacle, must be made in accordance with local electrical codes and regulations.

Note: Aluminum wiring may pose special problems—consult a qualified electrician.

Cooling sizes
All units come in four nominal cooling sizes: 7,000, 9,000, 12,000 and 15,000 BTUH.

Resistance heat
Resistance heat or backup heat output is determined by power connection kits (15A, 20A or 30A).

Grille options
RAG60 (Stamped Aluminum)
Molded Exterior Architectural Louvers:
RAG61 (Beige), RAG62 (Maple) and RAG63 (Dark Brown)
RAG67 Extruded Aluminum Architectural Grille

Ducted applications
AZ45 and AZ65 Series can be used with ductwork to heat or cool more than one room. RAK6053 Duct Adapter is applied to top of case over air discharge. RAK601B Duct Extension is applied to right or left of adapter. Locally fabricated ductwork may be added to extend to maximum recommended distance of 15 feet. Remote thermostat recommended with ducted straight line applications (no turns or bends).

Electrical connection
230/208V units may be plugged into a receptacle. 265V units and special-application 230/208V units require direct connection. See Architects and Engineers Design Data Manual for electrical connection information, including use of sub-base for direct-connected units. Installation must comply with local electrical codes and regulations.

For the most current updates to features, specifications and installations or applications, visit our website at www.zoneline.com.

WALL SLEEVE DIMENSIONS

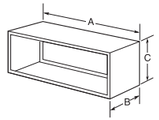

RAB77B wall sleeve
Molded SMC fiberglass-reinforced polyester compound.
A-42-1/8", B-13-7/8", C-16-1/4"

RAB81 and RAB818 wall sleeve
Heavy-gauge galvanized steel, with insulation.
A-42", B-13-3/4", C-16"

Wall opening dimensions
Add 1/4" to A and C dimensions for all cut-out sizes.
RAB81—16-1/4" min. H x 42-1/4" min. W
RAB81B—16-1/4" min. H x 42-1/4" min. W
RAB77B—16-1/2" min. H x 42-3/8" min. W

Extended sleeves also available.

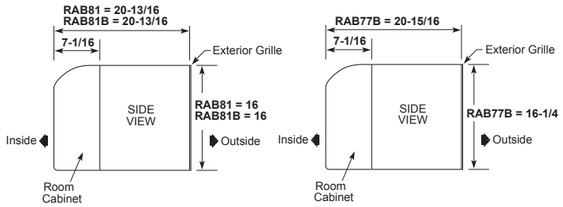

MAXIMUM CORD REACH (IN INCHES)

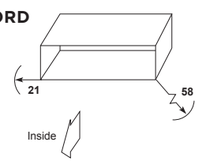

ZONELINE SPECIFICATIONS

HEATER WATTAGE

	230/208-VOLT	LINE-CORD CONNECTED (P) AND DIRECT-CONNECTED UNITS (D)				
BTUH SIZE	**7,000/9,000**			**12,000/15,000**		
Power connection kit	RAK315P & RAK315D	RAK320P & RAK320D	RAK330P & RAK330D	RAK315P & RAK315D	RAK320P & RAK320D	RAK330P & RAK330D
Total Watts	2,410/1,990	3,420/2,830	4,830/3,990*	2,430/2,020	3,450/2,860	4,860/4,020*
Heater Watts	2,400/1,960	3,400/2,780	4,800/3,930*	2,400/1,960	3,400/2,780	4,800/3,930*
Heater BTUh	8,100/6,600	11,600/9,400	16,300/13,400*	8,100/6,600	11,600/9,400	16,300/13,400*
Total Amps	10.5/9.6	14.9/13.6	21.0/19.2	10.6/9.7	15.1/13.8	21.2/19.3
Min. circuit (MCA)	15	20	25	15	20	25
Recommended protective device (MOCP)	15 amp time-delay fuse or breaker	20 amp time-delay fuse or breaker	30 amp time-delay fuse or breaker	15 amp time-delay fuse or breaker	20 amp time-delay fuse or breaker	30 amp time-delay fuse or breaker

	265-VOLT	PERMANENT (CORD SET) AND DIRECT-CONNECTED UNITS (D)				
BTUH SIZE	**7,000/9,000**			**12,000/15,000**		
Power connection kit	RAK515P & RAK515D	RAK520P & RAK520D	RAK530P & RAK530D	RAK515P & RAK515D	RAK520P & RAK520D	RAK530P & RAK530D
Total Watts	2,440	3,450	4,850*	2,460	3,470	4,870*
Heater Watts	2,400	3,400	4,800*	2,400	3,400	4,800*
Heater BTUh	8,100	11,600	16,300*	8,100	11,600	16,300*
Total Amps	9.1	12.9	18.1	9.3	13.1	18.4
Min. circuit (MCA)	15	20	25	15	20	25
Recommended protective device (MOCP)	15 amp time-delay fuse or breaker	20 amp time-delay fuse or breaker	25 amp time-delay fuse or breaker	15 amp time-delay fuse or breaker	20 amp time-delay fuse or breaker	25 amp time-delay fuse or breaker

Each line cord kit has an integral Leakage Current Detection and Interruption (LCDI) device as required by National Electrical Code (NEC) and Underwriters Laboratories (UL) for units manufactured after August 1, 2004. Wall case and exterior grille are also required for new construction.
*30 amp heater wattage will be reduced in low fan operation.

See page 276 for warranty information.

READING NOMENCLATURES

FRENCH-DOOR REFRIGERATOR

P F E 2 8 P S K S S

- **Brand** G=GE, P=GE Profile™
- **Energy** E=ENERGY STAR® S=standard D=door in door
- **Capacity**
- **Feature pack**
- **Model year**
- **Color** BB=Black, CC=Bisque, DS=Black Slate, ES=Slate, FS=Fingerprint Resistant Stainless, SA=Silver, SS=Stainless, TS=Black Stainless, WW=White
- **Configuration/Depth** F=standard depth, N=standard depth, non-dispenser, V=multi-door, W=counter depth, non-dispenser, Y=counter depth
- **Finish** G=High-gloss, M=Slate, S=Stainless, E=Black Slate, B=Black Stainless, Y=Fingerprint Resistant Stainless

COMPACT REFRIGERATOR, WINE & BEVERAGE (2014 AND BEYOND)

G M E 0 3 G L K L B

- **Brand** G=GE, P=GE Profile
- **Energy** E=ENERGY STAR, R=recessed handle, S=full-size handle
- **Capacity** cubic feet
- **Model year**
- **Finish** G=GE Gloss, L=CleanSteel™, M=Slate, S=Stainless
- **Color** WW=White on White, BB=Black on Black, LB=CleanSteel ext./Black handle, SS=Stainless ext./SS handle, SB=Stainless ext./Black handle, ED=Slate appearance/Dorian Gray handle
- **Type** C=built-in capable, D=double door, F=all refrigerator, M=manual defrost, V=wine & bev center, W=wine center
- **Shelving** A=wire shelves, B=beverage shelves, D=dual zone wine shelves, G=glass shelves, H=wine shelves, W=deluxe wine shelves

BOTTOM-FREEZER REFRIGERATOR

G D E 2 5 E S K S S

- **Brand** G=GE
- **Energy** E=ENERGY STAR S=standard
- **Capacity** cubic feet
- **Feature pack**
- **Finish** G=High-gloss, M=Slate, S=Stainless
- **Model year**
- **Color** BB=Black, CC=Bisque, DS=Black Slate, ES=Slate, FS=Fingerprint Resistant Stainless, SA=Silver, SS=Stainless, TS=Black Stainless, WW=White
- **Configuration/Depth** B=bottom-freezer door, no icemaker, D=bottom-freezer drawer, with icemaker

FREEZER

F U F 2 1 D L R W W

- **GE freezer**
- **Defrost** M=manual, F=frost-free
- **Capacity** cubic feet
- **Model year**
- **Color** WW=White, CD=Camouflage Wilderness Pattern
- **Configuration** U=upright, C=chest
- **Series** C=Camouflage pattern, D=deluxe, P=ENERGY STAR, Q=direct import, S=standard
- **Door swing** R=right, L=left

SIDE-BY-SIDE REFRIGERATOR

G S E 2 5 H S H S S

- **Brand** G=GE, P=GE Profile
- **Energy** E=ENERGY STAR S=standard
- **Capacity** cubic feet
- **Feature pack**
- **Model year**
- **Color** BB=Black, CC=Bisque, DS=Black Slate, ES=Slate, FS=Fingerprint Resistant Stainless, SA=Silver, SS=Stainless, TS=Black Stainless, WW=White
- **Configuration/Depth** S=standard depth, Z=counter depth
- **Finish** G=High-gloss, M=Slate, S=Stainless, B=Black Stainless, Y=Fingerprint Resistant Stainless

ICE MAKER

U N C 1 5 N J I I

- **Configuration** U=Universal
- **Ice** N=nugget ice, C=clear ice
- C=panel-ready
- **Size (width)** Inches
- N=no shelf
- **Model year**
- **Product color** II=panel-ready

WALL OVEN

P T S 7 0 0 0 B N T S

- **Brand** P=GE Profile, J=GE
- **Width** T=30", K=27"
- **Cavity Configuration** S=single, D=double
- **Series**
- **Feature pack**
- **Door Style** 0=Drop down, L=Left hand swing, R=Right hand swing
- **Model year**
- **Base color** D=Color match, S=Stainless, B=Black Stainless, E=Slate, F=Black Slate
- **Finish** SS=Stainless, TS=Black Stainless, ES=Slate, DS=Black Slate, BB=Black, WW=White

TOP-FREEZER REFRIGERATOR

G T E 1 5 C T H R W W

- **Brand** G=GE
- **Energy** E=ENERGY STAR S=standard
- **Capacity** cubic feet
- **Model year**
- **Color** BB=Black, CC=Bisque, DS=Black Slate, ES=Slate, FS=Fingerprint Resistant Stainless, SA=Silver, SS=Stainless, TS=Black Stainless, WW=White
- **Configuration** T=top-freezer with handle, no icemaker, I=top-freezer with handle and icemaker, P=top-freezer with pocket handle, no icemaker
- **Finish** C=Silver Metallic, G=High-gloss, M=Slate, S=Stainless, T=Textured
- **Door swing** R=right, L=left
- **Feature pack** C = wire shelves, pocket handle, texture door; D = wire shelves, handle texture door; G = glass shelves, texture door; H = glass shelves, smooth door; J = premium door shelves, texture door; K = Garage Ready, smooth door

WARMING DRAWER

P T W 9 0 0 0 S N S S

- **Brand** P=GE Profile
- **Width** T=30", K=27"
- **Configuration** W=warming drawer
- **Series**
- **Base color** S=Stainless
- **Model year**
- **Product Color** SS=Stainless

READING NOMENCLATURES (continued)

ADVANTIUM® (2008 and beyond)

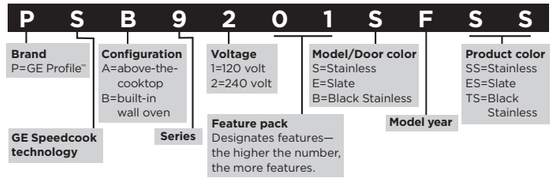

MICROWAVE OVEN

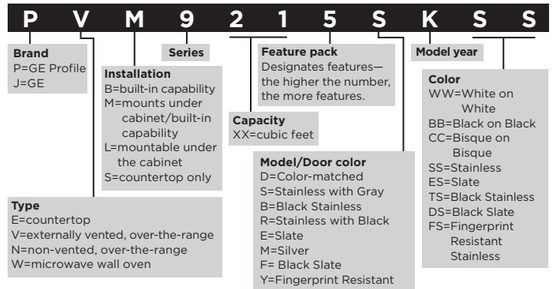

COOKTOP

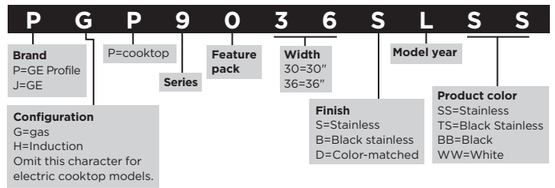

RANGE

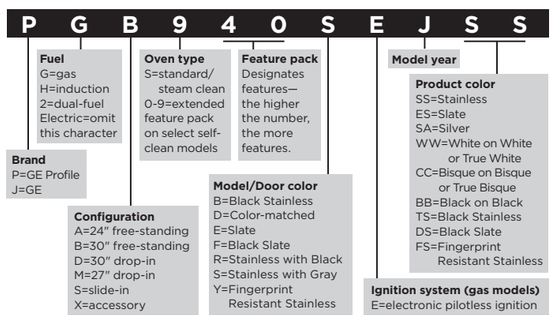

VENTILATION

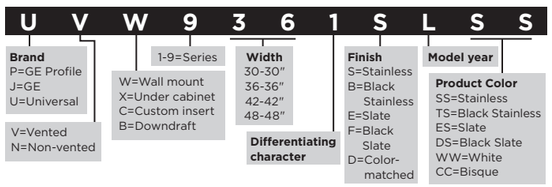

DISHWASHER—STAINLESS STEEL, HYBRID STAINLESS STEEL AND PLASTIC INTERIOR

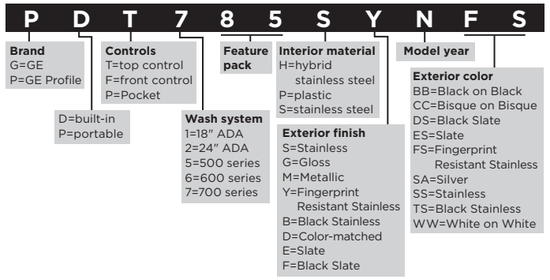

DISHWASHER—GE STANDARD TUB

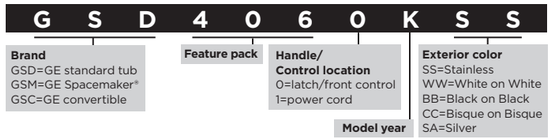

DISPOSER



WASHER

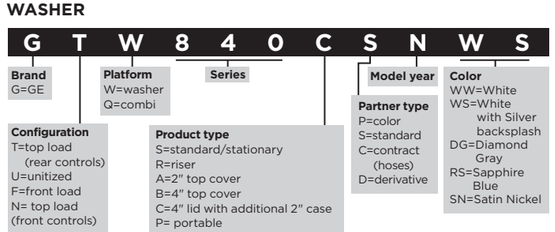

DRYER

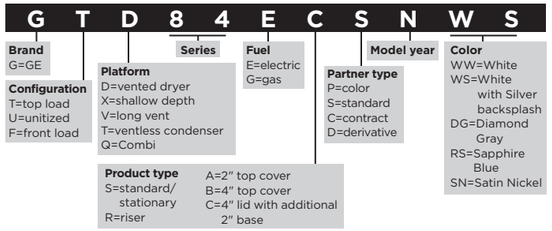

WATER SOFTENING SYSTEM

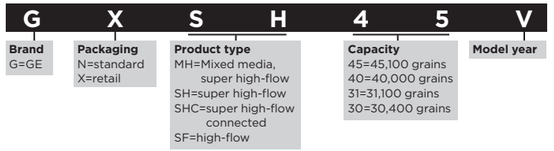

FLEXIBLE CAPACITY ELECTRONIC WATER HEATER

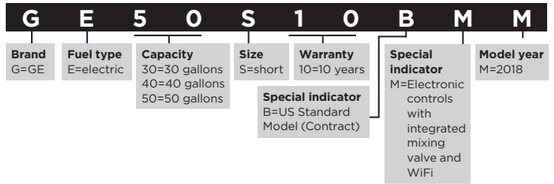

ELECTRIC TANKLESS WATER HEATER

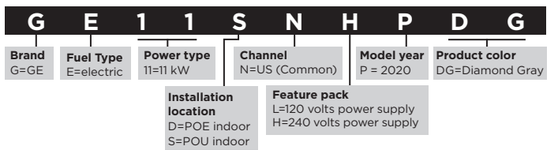

SOLAR WATER HEATER

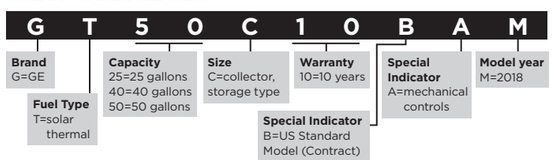

ELECTRONIC/ELECTRIC WATER HEATER

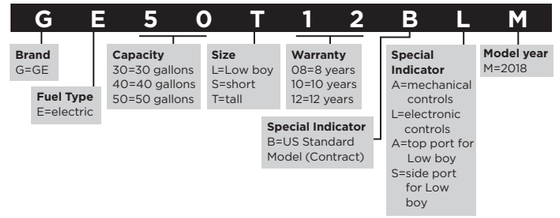

REVERSE-OSMOSIS SYSTEM

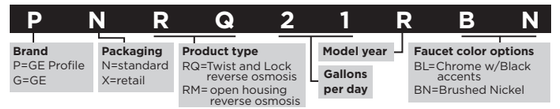

UNDER-THE-COUNTER FILTRATION SYSTEM

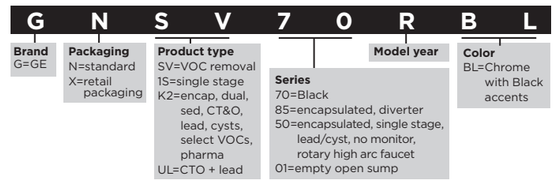

INLINE UNIT

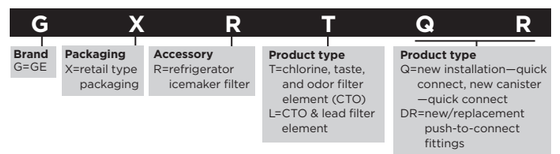

WHOLE-HOME FILTRATION SYSTEM

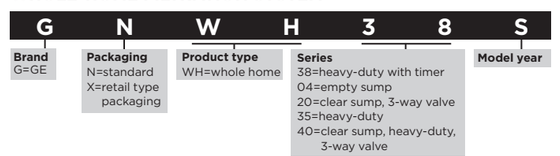

READING NOMENCLATURES (continued)

WINDOW AIR CONDITIONER

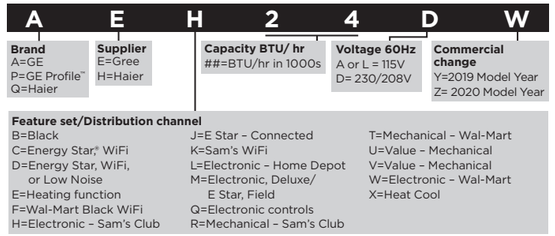

PORTABLE AIR CONDITIONER

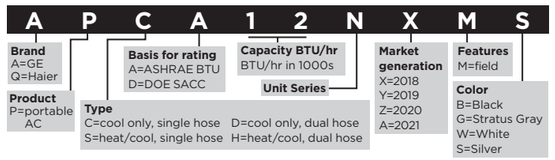

DEHUMIDIFIER

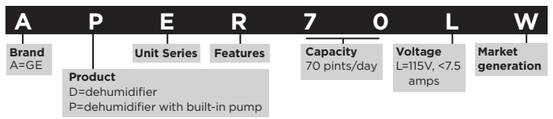

BUILT-IN/THROUGH-THE-WALL AIR CONDITIONER

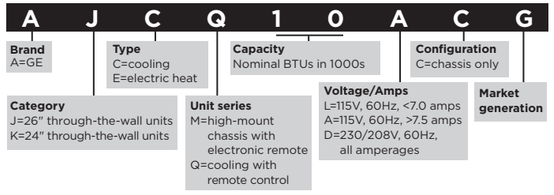

ZONELINE® CHASSIS

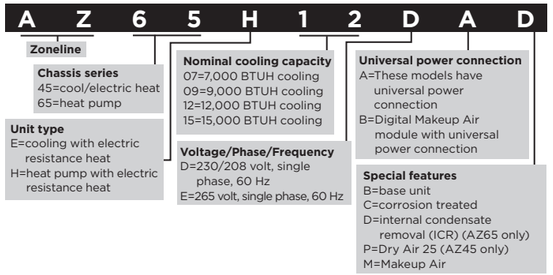

ZONELINE VERTICAL UNIT

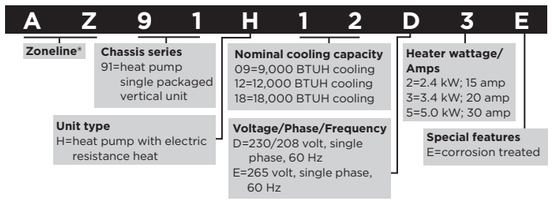

PARTS AND ACCESSORIES

REFRIGERATION	PART NUMBER
Keurig® K-Cup® Brewing System	WR02X30247
Keurig Brew Cup - 3 Pack	MyBrewCup3PK
8' Universal Braided Pex Water Line	PM08X10008
8' Universal Pex Water Line	WX08X10006
GE Icemaker Kit	IM6D
GE Optional Bottom Freezer Icemaker Kit	IM5D
Cerama Bryte® Stainless Steel Cleaner & Polisher	PM10X311
Cerama Bryte Stainless Steel Microfiber Cleaning Cloths	WX10X307
Cerama Bryte Stainless Steel Wipes	WX10X10004
Cerama Bryte Refrigerator Cleaner	WX10X10206
Ice Cube Tray	WR30X311
Appliance Brush Set	PM14X10056
COOKING	
30" Never-Scrub Heavy-Duty Roller Rack Accessory (Wall Oven)	UXWORXR30
27" Never-Scrub Heavy-Duty Roller Rack Accessory (Wall Oven)	UXWORXR27
Cooktop Trim Kit	JXTR32B
GE Filler Trim Kit	JXTR32W
Optional Electrical Installation Accessory Kit	JXCK89
Flush Mount Kit	JXFLUSH1
Precision Cooking Probe with Bluetooth Dongle and Instruction Manual	JXSOUSV1
Probe Accessory	JXPROBE1
Hestan Cue 11" Smart Pan	WB32X32079
Universal 3-Wire 4' Electrical Range Cord Set	WX09X10006
Universal 4-Wire 4' Electrical Range Cord Set	WX09X10035
Cerama Bryte Complete Cooktop Kit	WX10X10020
Cerama Bryte Burnt-On Grease Remover	WX10X320
Cerama Bryte Cooktop Scraper & Pad	PM10X304
Universal Broiler Pan/Rack Set	WB48X10056
GE Electric Range Drip Bowls Satin Chrome (4 Pack)	GE68CC
GE Electric Range Drip Bowls Black Porcelain (4 pack)	GE68PCS
3 Self-Clean Oven Racks (Electric/Gas)	JXRACK3E/G
Center Grate (Free-Standing Gas)	WB31X27150 same as JXGRATE1
Optional 30" Cast-Iron Griddle (Built-in/Cooktop)	WB31X29448 same as JXGRIDL230
Optional 36" Cast-Iron Griddle (Built-in/Cooktop)	WB31X29396 same as JXGRIDL236
Stainless Steel-Clad Aluminum Griddle (Free-Standing Gas)	JXGRIDL1
Aluminum Griddle	WB31X24738
Reversible Grill/Griddle (Free-Standing Gas)	WB31X24998 same as JXGRILL1
Cerama Bryte Cooktop Cleaner	WX10X300
Chantal® 9-Piece Cookware Set	WB02X30447
Chantal 8" Non-Stick Frypan	WB32X32287
Chantal 10" Non-Stick Frypan	WB32X32288
4' Universal Gas Range Connection with Auto Shutoff Kit	PM15X113
4' Universal Gas Range Installation Kit	PM15X103
Free-Standing 5-Burner Passover Kit	WB49XGR05F
Free-Standing 4-Burner Passover Kit	WB49XGR04F
Slide-In 5-Burner Passover Kit	WB49XGR05S
Roasting Rack for WB48X10056	WB48X5108
30" GE & HOTPOINT Free-Standing Range Sensi-Temp Coil Kit 3-6"+1-8"	WB30X32133
30" GE & HOTPOINT Free-Standing Range Sensi-Temp Coil Kit 2-6"+2-8"	WB30X32134
6" Sensi-Temp Coil	WB30X31058
8" Sensi-Temp Coil	WB30X31057
Cerama Bryte Gas Grate Cleaning Kit	WX10X10021
Cerama Bryte Cleaning Pads	WX10X350
Cerama Bryte Stainless Steel Microfiber Cleaning Cloths	WX10X307
Cerama Bryte Stainless Steel Cleaner & Polisher	PM10X311
Citrushine™ Stainless Steel Spray	WX10X10009
Cerama Bryte Stainless Steel Wipes	WX10X10004
Cerama Bryte Appliance Cleaner (use on matte finishes)	WX10X392
Cerama Bryte Granite Cleaner	WX10X310
Cerama Bryte Touchups Spray	WX10X391
Never-Scrub Roller Rack (Gas Ranges)	WB48X21543
Never-Scrub Roller Rack (881 for Electric Single Ovens) (862 for Electric Double Ovens)	WB48X20881 or WB48X20862
Never-Scrub Roller Rack (Dual Fuel Ranges)	WB48X20990
GE Cooktop Filler Trim Kit	JXTR32W
Slide-In Range Filler Kit	JXFILLR1

VENTILATION	
30" telescopic hood trim accessory	UXB630BPTS
36" telescopic hood trim accessory	UXB636BPTS
GE Optional Damper Accessory	JXDA22
Electric Range Accessory—Chimney Extension Kit	UXCH
GE Range Hood Cord Kit	JXHC1
Automatic Make-up Air Damper for 6" duct	JXMUA6
Automatic Make-up Air Damper for 8" duct	JXMUA8
Range Hood 10-Ft. Duct Cover Kit	UXDC53/UXDC72**
Range Hood Charcoal Filter—2-Pack	WB02X24842 same as JXCF72
Range Hood Remote Control	WB02X24870 same as UXRC70
15" Cabinet Spacer for 30"/36" Hoods	JXS50SS, JXS56SS
Charcoal Filter	UXCF91
Grease Filters	WB02X10757 WB02X11478 WB02X10171 WB02X24873
Range Hood Recirculation Kit	UXN70
10' Ceiling Stainless Duct Cover Kit	UX10DC8**
12' Ceiling Duct Cover Kit	UX12DC9**
14' Ceiling Duct Cover Kit	UX14DC9**
30" Hood Liner	UXHL30
36" Hood Liner	UXHL36
Charcoal Replacement Filter	JXCF30
Range Hood Remote Control	UXRC70/WB02X24870
Duct Reducer	UXDT86
ADVANTIUM®/MICROWAVE OVENS	
36" Over-the-Range Microwave Accessory Filler Kit	JX36B
Cerama Bryte Appliance Cleaner	WX10X392
Cerama Bryte Stainless Steel Cleaner & Polisher	PM10X311
Cerama Bryte Stainless Steel Wipes	WX10X10004
Cerama Bryte Stainless Steel Microfiber Cleaning Cloths	WX10X307
Advantium Wall Oven Storage Drawer	UXB903SNSS
15" Cabinetry Bump Out Kit	JX15BUMP
DISHWASHERS	
Dishwasher Third Rack Accessory Kit	GPF3RACK
Dishwasher Tray	WX7X5
6' Universal Dishwasher Installation Kit	PM28X329
6' Universal Dishwasher Connector Kit with Adapter	WX28X326
12' Universal Dishwasher Connector Kit with Adapter	WX28X327
Universal 7'9" 3-Prong Power Cord for Built-In Dishwashers	WX09X70911
Universal 5'4" 3-Prong Power Cord for Built-In Dishwashers	WX09X70910
10' Small Port Drain Hose/10' Universal Connector Kit	WX28X320
10' Small Port Drain Hose/10' Universal Connector Kit	WX28X321
12' Dishwasher Drain Hose Extension	WD24X10065
White Upper Dishwasher Rack Roller Kit 4-pack	WD35X20994
White Upper Dishwasher Rack Roller Kit 4-pack	WD35X21035
White Lower Dishwasher Rack Roller Kit 8-pack	WD35X21038
Gray Upper Dishwasher Rack Roller Kit 4-pack	WD35X21036
Gray Upper Dishwasher Rack Roller Kit 4-pack	WD35X21039
Gray Lower Dishwasher Rack Roller Kit 8-pack	WD35X21041
Dishwasher Garden Hose Elbow	WX28X329
Finish® Jet-Dry® Rinse Aid	WX10X10210
Finish Detergent Booster	WX10X10022
Finish Dishwasher Cleaner	WX10X10209
COMPACTORS/DISPOSERS	
Universal Compactor Bags 15-count	WX60X1
Heavy-duty Compactor Bags 12-count	WC60X5017
Cerama Bryte Disposer Cleaner	WX10X311
Splash Guard	WC03X10010
Stopper	WC11X10003
Universal Disposer Power Cord Kit	WC12X10002
3-Bolt-Mount Adapter Kit	PM3X214
Door Toe Kick	WC17X10019 WC17X20082
Adjustable Door Kick Panel	WC17X10011

PARTS AND ACCESSORIES

CLOTHES CARE	
Universal 6' Stainless Steel Washer Hose with 90° Elbow, 2-Pack	WX14X10011
Universal 4' Polymer Coated Washer Hose, 2-Pack	WX14X10005
Universal 4' Rubber Washer Hose, 2-Pack	WH41X10207
GE Appliances' Exclusive Universal Flexible Metal Transition Dryer Duct (installer version)	WX08X10086
Universal Steam Dryer Kit	PM14X10012
Universal Flexible Dryer Duct	PM8X73
Universal 4' Gas Dryer Connection Kit w/Auto Shut Off	PM15X114
Universal 5' Gas Dryer Connection Kit w/Auto Shut Off	PM15X118
Universal 4-Wire 4' 30-AMP	WX09X10018
Universal 4-Wire 5' 30-AMP	WX09X10019
Universal 4-Wire 6' 30-AMP Electrical Dryer Cord	WX09X10020
Universal 3-Wire 4' 30-AMP	WX09X10002
Universal 3-Wire 5' 30-AMP	WX09X10003
Universal 3-Wire 6' 30-AMP	WX09X10004
Universal Low-Profile Washer Floor Tray	PM7X2 (White) PM7X3 (Gray)
Universal Anti-Vibration Pads	WX17X10001CA
Cerama Bryte Washer Cleaner	WX10X312
Universal Wool Dryer Balls - 3PK	WX02X30937
Dryer Racks	WE1M1038 WE01X20677 WE01X22274
Universal Side Vent Dryer Kit**	WE16X229317
Wall Mount Kit	WE49X22415
Universal Dryer Steam Kit with Brass "Y"	WE16X229317
Gas Dryer LP Conversion Kit 24"	WE25M73
Gas Dryer LP Conversion Kit 27"	WE25X217 WE250474
Washing Machine Drain Hose Extension Kit	WH49X301
Washing Machine Drain Hose Extension Kit	WH49X315
Washing Machine Drain Hose Extension Kit	WH49X316
Washing Machine Drain Hose Extension Kit	WH49X317
Dryer Natural Gas to LP Converter Kit	WE25X10032
GE Stack Rack	DSDR24F
GE Washer/Dryer Stack Bracket Kit	WE25X10028 same as GFA28KITN
Wall-Mount Kit	WE49X22415
GE Washer/Dryer 24" Stack Bracket Kit	WE25X10031 same as GE24STACK
GE Washer/Dryer 24" Stack Bracket Kit	GFA24KITL
7" Rightheight Riser	GFR0728
WATER SYSTEMS	
Aluminum Anode Rod (GE30S08BAM; GE30S10BLM; GE30/40L08BAM)	GEKAA24
Aluminum Anode Rod (GE30T08BAM; GE30T10BLM; GE40S08/10BAM; GE40/50S10BLM; GE50S08/10BAM)	GEKAA39
Aluminum Anode Rod (GE40T08/10BAM; GE40/50T10BLM; GE50T08/10BAM)	GEKAA50
Pitched Roof Mounting Rails (GT25C10BAM)	GT25CKR
Hardware for GT25CKR	GT25CKHL
Pitched Roof Mounting Rails (GT50/GT40C10BAM)	GT50CKR
Hardware for GT50CKR	GT50CKHL
Pitched Roof Mounting Kit	GT00CKM01
30° angle, Flat Roof Mounting Kit (GT25C10BAM)	GT25CKM30
45° angle, Flat Roof Mounting Kit (GT25C10BAM)	GT25CKM45
30° angle, Flat Roof Mounting Kit (GT40C10BAM)	GT40CKM30
45° angle, Flat Roof Mounting Kit (GT40C10BAM)	GT40CKM45
30° angle, Flat Roof Mounting Kit (GT50C10BAM)	GT50CKM30
45° angle, Flat Roof Mounting Kit (GT50C10BAM)	GT50CKM45
Temperature Sensor Sleeve	GT00CKSL
Protective Cover (GT25C10BAM)	GT25CKC
Protective Cover (GT40C10BAM)	GT40CKC
Protective Cover (GT50C10BAM)	GT50CKC
Filtered Water Faucet	UNFCTFBL
Replacement O-Rings with Lubricant	UCRING
Universal Carbon Filter Wrench	UCWRNCH
Replacement O-Ring with Lubricant	HHRING
Universal Sump Wrench	HHWRNCH

*IM4LED is available only through ADC network.
Must be purchased using a dealer appliance account.

**New part number in 2020

Citrushine is a trademark of Bryson Industries, Inc. Cerama Bryte is a registered trademark of Cerama Bryte, Inc.

WARRANTY INFORMATION

All parts and accessories have a limited one-year warranty, with the exception of water filters, which have a 30-day warranty.

LIMITED ONE-YEAR WARRANTY

If your GE part fails because of a manufacturing defect within one year from the date of original purchase, we will provide a new or, at our option, rebuilt part without charge. Return the defective part to the vendor from whom it was purchased with a copy of the "proof of purchase." If the part is defective and shows no signs of abuse, it will be exchanged.

This warranty does not cover the failure of parts which are damaged while in your possession, are abused, or have been installed improperly. It does not cover the cost of returning the part to the vendor from whom it was purchased nor does it cover the cost of labor to remove or install it to diagnose the fault. It does not cover parts used in products in commercial use except in the case of air conditioning equipment. In no event shall GE Appliances be liable for consequential damage.

EXCLUSION OF IMPLIED WARRANTIES:

Your sole and exclusive remedy is part exchange as provided in this Limited Warranty. Any implied warranties, including the implied warranties of merchantability or fitness for a particular purpose, are limited to one year or the shortest period allowed by law.

Warrantor: GE Appliances



YOUR TRUST
IS OUR LEGACY

Once again, GE Appliances has been humbled by being voted the **#1 Most-Used Appliance Brand Among Builders** for both kitchens and laundry.* We're honored by the recognition, and we can't wait to keep earning the trust of the building community into the future.

See how we go the extra mile for builders at GEAppliances.com/pro.

Profile™ | GE APPLIANCES

*2006-2020 Builder Brand Use Study, 2019-2020 Home Builder Executive Brand Analysis

geappliances.com

HOME IS WHERE THE HAPPY IS

Who says long-lasting can't be on-trend? We designed this kitchen to reflect the inspiration and delight that Americans find in their family time, with vibrant colors that breathe fresh fun into the heart of every home. This joyful color story is fun and functional – just like every GE Appliances product.



Appliances shown: Dishwasher—GDP665SYNFS (pg. 151);
French-Door refrigerator—GYE22GYNFS (pg. 17);
Over-the-range microwave oven—JVM6175YKFS (pg. 138);
Gas range—JGBS86SPSS (pg. 128)

good things, for life. GE APPLIANCES

Appliance Park
Louisville, KY 40225
geappliances.com
Pub. No 1-G0200 PC95151

GE is a trademark of the General Electric Company. Manufactured under trademark license.

GE Appliances has a policy of continuous improvement of its products and reserves the right to change materials and specifications without notice.

PRINTED WITH SOY INK